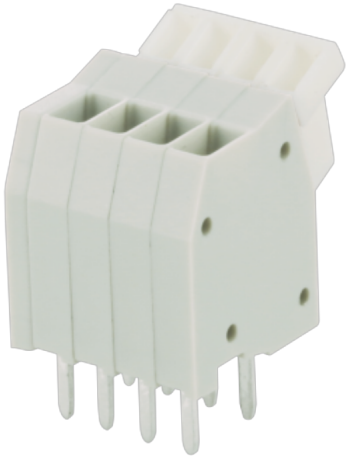

额定电流: 4A

额定电压: 150V

使用线径: 28-20AWG

间距:2.5mm

目录仅供参考，实际规格依产品工程图为准 版本1.0

技术数据-UL/CUL

等级 Use Group	B	C	D
额定电压 Rate Voltage [V]	150	-	-
额定电流 Rated Current [A]	4	-	-
接线范围 Wire Range [AWG]	28-20		
耐电压 Dielectric Voltage-Withstand	1.3KV		

技术参数-IEC

过电压类别 Overvoltage Category	III	III	II
污染等级 Contamination Class	3	2	2
额定电压 Rated Voltage [V]	63	160	320
额定电流 Rated Current [A]	6	6	6
额定冲击电压 Impulse withstand voltage [KV]	2.5	2.5	2.5

导线截面积[硬/柔] Conductor cross section [mm²]	0.2-0.5

材料 Material

绝缘材料 Insulation Material	PA66
阻燃等级 Flame relardant rating	UL94V-0
导体材料 Conductor Material	Copper alloy
导体表面镀层 Plating of conductor surface	Sn plated

一般参数 Other Date

间距/极数 Pitch/Poles [mm]/[P]	2.5/01-30
剥线长度 Stripping Length [mm]	5-6
螺丝/扭矩 Screw/Torque(Max)[N.m]	-
工作温度 Operating temperature [℃]	-40～+105
焊接方式 Soldering method	Wave soldering
引针尺寸 Pin dimensions [mm]	0.75*0.5
PCB板孔径 PCB Hole Diameter [mm]	□1.1

尺寸图

PCB开孔图

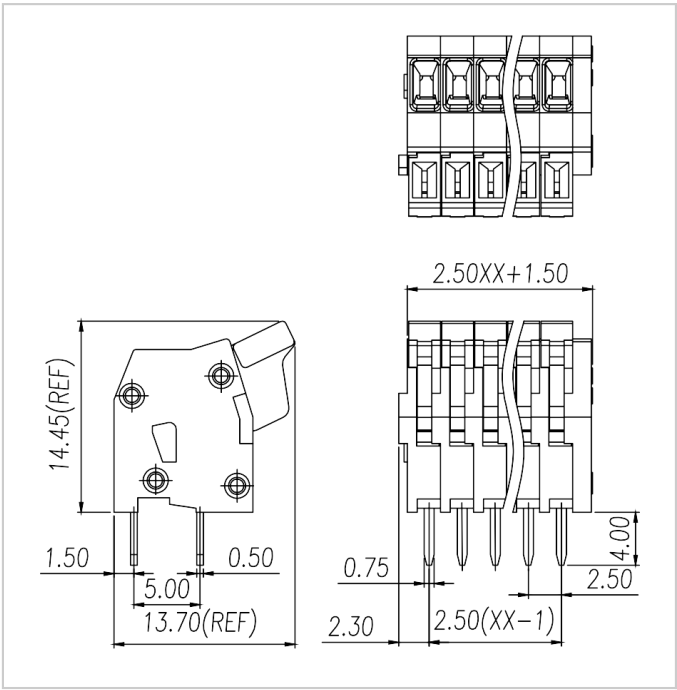
2.50XX+1.50
14.45(REF)
1.50
0.50
5.00
13.70(REF)
0.75
4.00
2.50
2.30
2.50(XX-1)

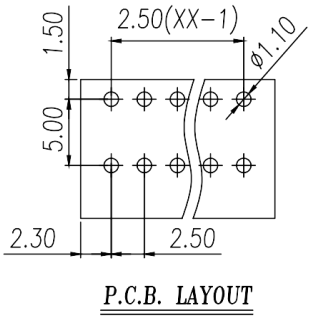
1.50
2.50(XX-1)
ø1.10
5.00
2.30
2.50
P.C.B. LAYOUT