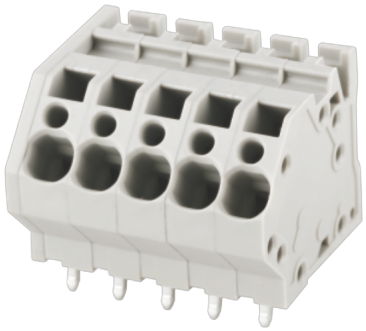

额定电流: 20A

额定电压: 300V

使用线径: 28-12AWG

间距:5.0mm

目录仅供参考，实际规格依产品工程图为准 版本1.0

技术数据-UL/CUL

等级 Use Group	B	C	D
额定电压 Rate Voltage [V]	300	-	300
额定电流 Rated Current [A]	20	-	10
接线范围 Wire Range [AWG]	28-12		
耐电压 Dielectric Voltage-Withstand	1.6KV		

技术参数-IEC

过电压类别 Overvoltage Category	III	III	II
污染等级 Contamination Class	3	2	2
额定电压 Rated Voltage [V]	320	320	630
额定电流 Rated Current [A]	32	32	32
额定冲击电压 Impulse withstand voltage [KV]	4	4	4

导线截面积[硬/柔] Conductor cross section [mm²]	0.2-4.0

材料 Material

绝缘材料 Insulation Material	PA66
阻燃等级 Flame relardant rating	UL94V-0
导体材料 Conductor Material	Copper alloy
导体表面镀层 Plating of conductor surface	Sn plated

一般参数 Other Date

间距/极数 Pitch/Poles [mm]/[P]	5.0/1-24
剥线长度 Stripping Length [mm]	9-10
螺丝/扭矩 Screw/Torque(Max)[N.m]	-
工作温度 Operating temperature [℃]	-40～+105
焊锡温度 Soldering temperature	260℃/5S
引针尺寸 Pin dimensions [mm]	1.2*0.8
PCB板孔径 PCB Hole Diameter [mm]	□1.8

尺寸图

PCB开孔图

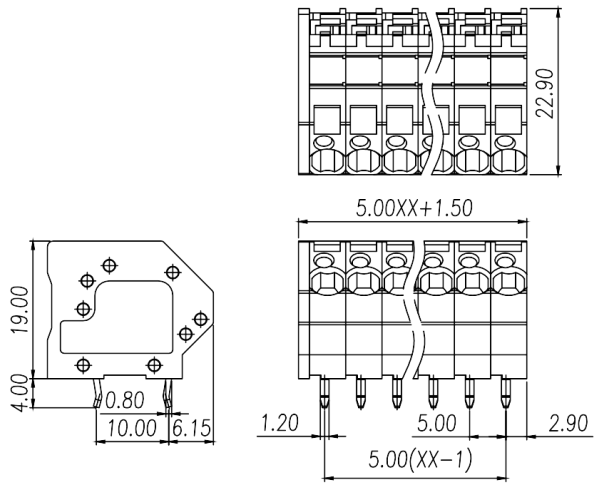
22.90
5.00XX+1.50
19.00
4.00
ø0.80
10.00
6.15
1.20
5.00
2.90
5.00(XX-1)

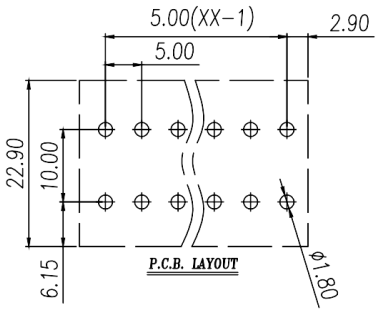
5.00(XX-1)
2.90
5.00
22.90
10.00
6.15
P.C.B. LAYOUT
ø1.80