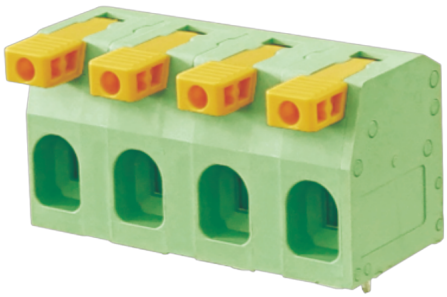

额定电流: 51A

额定电压: 600V

使用线径: 18-4AWG

间距:15.0mm

目录仅供参考，实际规格依产品工程图为准 版本1.0

技术数据-UL/CUL

等级 Use Group	B	C	D
额定电压 Rate Voltage [V]	600	600	-
额定电流 Rated Current [A]	51	51	-
接线范围 Wire Range [AWG]		18-4	
耐电压 Dielectric Voltage-Withstand		2.2KV	

技术参数-IEC

过电压类别 Overvoltage Category	III	III	II
污染等级 Contamination Class	3	2	2
额定电压 Rated Voltage [V]	1000	1000	1000
额定电流 Rated Current [A]	76	76	76
额定冲击电压 Impulse withstand voltage [KV]	8	8	8

导线截面积[硬/柔] Conductor cross section [mm²]	0.2-16

材料 Material

绝缘材料 Insulation Material	PA66
阻燃等级 Flame relardant rating	UL94V-0
导体材料 Conductor Material	Copper alloy
导体表面镀层 Plating of conductor surface	Sn plated

一般参数 Other Date

间距/极数 Pitch/Poles [mm]/[P]	15.0/2-18
剥线长度 Stripping Length [mm]	17-18
螺丝/扭矩 Screw/Torque(Max)[N.m]	-
工作温度 Operating temperature [℃]	-40～+105
焊锡温度 Soldering temperature	260℃/5S
引针尺寸 Pin dimensions [mm]	1.2*1.2
PCB板孔径 PCB Hole Diameter [mm]	□1.9

尺寸图

PCB开孔图

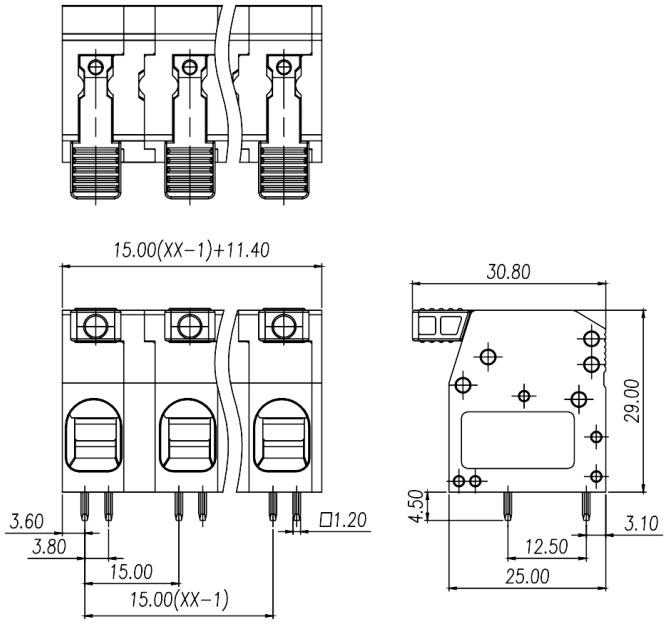
15.00(XX−1)+11.40
30.80
29.00
3.60
3.80
15.00
15.00(XX−1)
□1.20
4.50
12.50
25.00
3.10

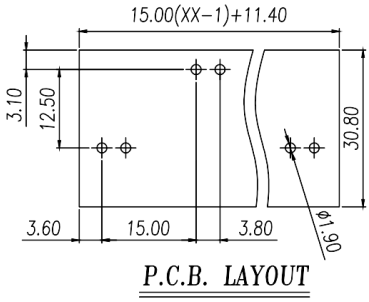
15.00(XX−1)+11.40
3.10
12.50
30.80
3.60
15.00
3.80
ϕ1.90
P.C.B. LAYOUT