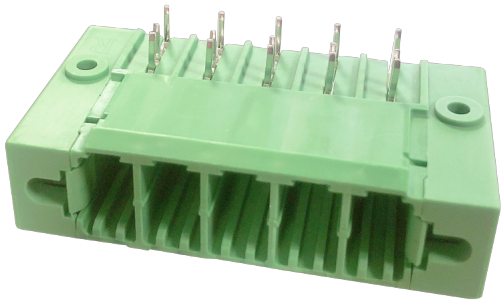

额定电流: 41A

额定电压: 300V

间距:7.62mm

目录仅供参考，实际规格依产品工程图为准 版本1.0

技术数据-UL/CUL

等级 Use Group	B	C	D
额定电压 Rate Voltage [V]	300	300	300
额定电流 Rated Current [A]	41	41	10
接线范围 Wire Range [AWG]		-	
耐电压 Dielectric Voltage-Withstand		1.6KV	

技术参数-IEC

过电压类别 Overvoltage Category	III	III	II
污染等级 Contamination Class	3	2	2
额定电压 Rated Voltage [V]	630	630	1000
额定电流 Rated Current [A]	41	41	41
额定冲击电压 Impulse withstand voltage [KV]	6	6	6

导线截面积[硬/柔] Conductor cross section [mm²]	-

材料 Material

绝缘材料 Insulation Material	PA66
阻燃等级 Flame relardant rating	UL94V-0
导体材料 Conductor Material	Copper alloy
导体表面镀层 Plating of conductor surface	Sn plated

一般参数 Other Date

间距/极数 Pitch/Poles [mm]/[P]	7.62/2-12
剥线长度 Stripping Length [mm]	-
螺丝/扭矩 Screw/Torque(Max)[N.m]	-
工作温度 Operating temperature [℃]	-40～+105
焊锡温度 Soldering temperature	260℃/5S
引针尺寸 Pin dimensions [mm]	0.8*1.0
PCB板孔径 PCB Hole Diameter [mm]	□1.6

尺寸图

PCB开孔图

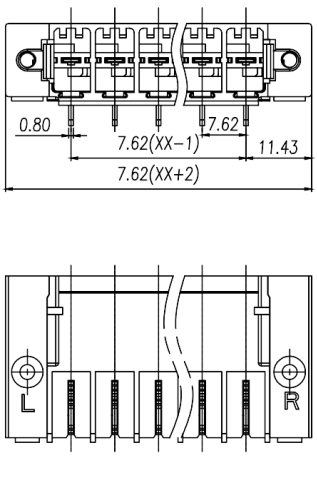

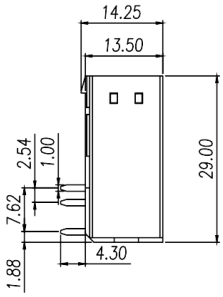

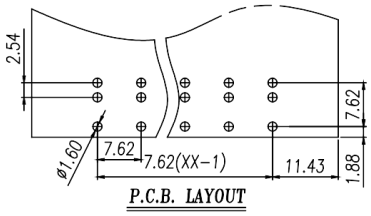

配件

WJ3EDGKHM-7.62