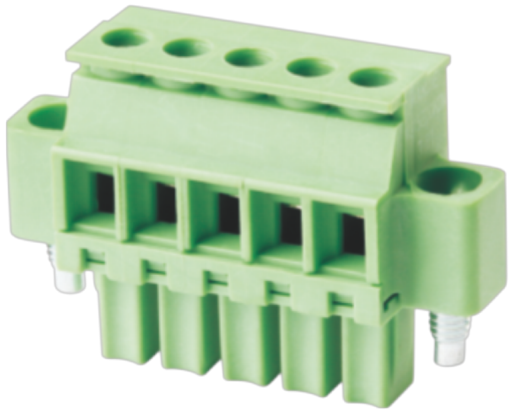

插拔式连接器

额定电流: 8A

额定电压: 300V

使用线径: 28-16AWG

间距:3.5mm

目录仅供参考，实际规格依产品工程图为准 版本1.0

技术数据-UL/CUL

等级 Use Group	B	C	D
额定电压 Rate Voltage [V]	300	-	300
额定电流 Rated Current [A]	8	-	8
接线范围 Wire Range [AWG]	28-16		
耐电压 Dielectric Voltage-Withstand	1.6KV		

技术参数-IEC

过电压类别 Overvoltage Category	III	III	II
污染等级 Contamination Class	3	2	2
额定电压 Rated Voltage [V]	160	160	320
额定电流 Rated Current [A]	8	8	8
额定冲击电压 Impulse withstand voltage [KV]	2.5	2.5	2.5

导线截面积[硬/柔] Conductor cross section [mm²]	0.2-1.5

材料 Material

绝缘材料 Insulation Material	PA66
阻燃等级 Flame relardant rating	UL94V-0
导体材料 Conductor Material	Copper alloy
导体表面镀层 Plating of conductor surface	Sn plated

一般参数 Other Date

间距/极数 Pitch/Poles [mm]/[P]	3.5/2-24
剥线长度 Stripping Length [mm]	6-7
螺丝/扭矩 Screw/Torque(Max)[N.m]	M2/0.2
工作温度 Operating temperature [℃]	-40～+105

尺寸图

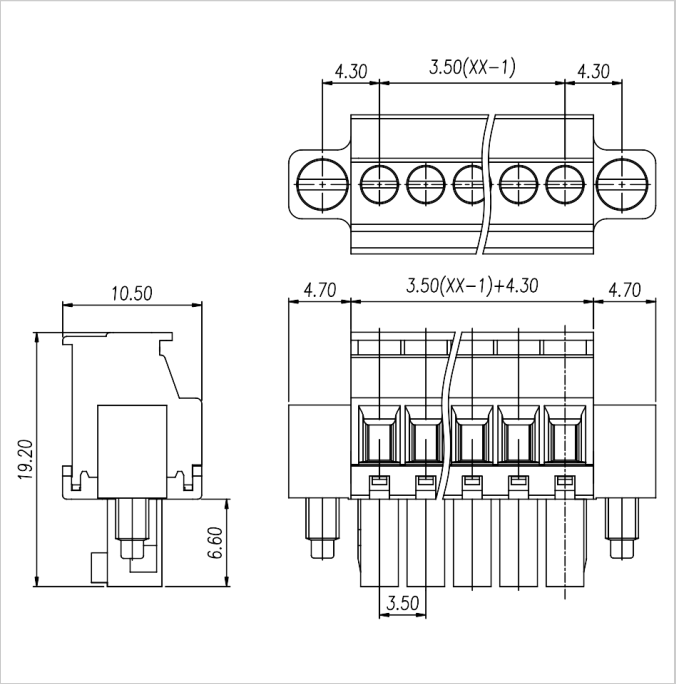

适配产品



WJ15EDGVM-THR-3.5



WJ15EDGRM-THR-3.5



WJ15EDGVM-3.5



WJ15EDGRM-3.5



WJ15EDGLM-3.5



WJ15EDGVTM-3.5



WJ15EDGRTM-3.5



WJ15EDGVHM-3.5



WJ15EDGRHM-3.5