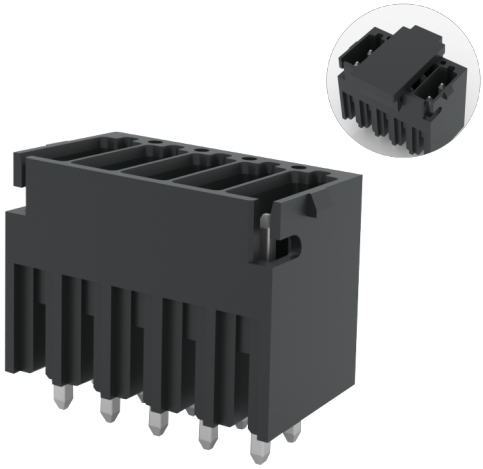

额定电流: 6A

额定电压: 150V

使用线径: /

间距:2.54mm

安装: 回流焊

目录仅供参考，实际规格依产品工程图为准 版本1.0

技术数据-UL/CUL

等级 Use Group	B	C	D
额定电压 Rate Voltage [V]	150	-	-
额定电流 Rated Current [A]	6	-	-
接线范围 Wire Range [AWG]		-	
耐电压 Dielectric Voltage-Withstand		1.3KV	

技术参数-IEC

过电压类别 Overvoltage Category	III	III	II
污染等级 Contamination Class	3	2	2
额定电压 Rated Voltage [V]	32	160	160
额定电流 Rated Current [A]	6	6	6
额定冲击电压 Impulse withstand voltage [KV]	0.8	2.5	2.5

导线截面积[硬/柔] Conductor cross section [mm²]	-

材料 Material

绝缘材料 Insulation Material	HIGH-TEMPERATURE PLASTICS
阻燃等级 Flame relardant rating	UL94V-0
导体材料 Conductor Material	Copper alloy
导体表面镀层 Plating of conductor surface	Sn plated

一般参数 Other Date

间距/极数 Pitch/Poles [mm]/[P]	2.54/2*2-2*24
剥线长度 Stripping Length [mm]	-
螺丝/扭矩 Screw/Torque(Max)[N.m]	-
工作温度 Operating temperature [℃]	-40～+130
焊接方式 Soldering method	Reflow Soldering
引针尺寸 Pin dimensions [mm]	0.64*0.64
PCB板孔径 PCB Hole Diameter [mm]	Ø1.2

尺寸图

PCB开孔图

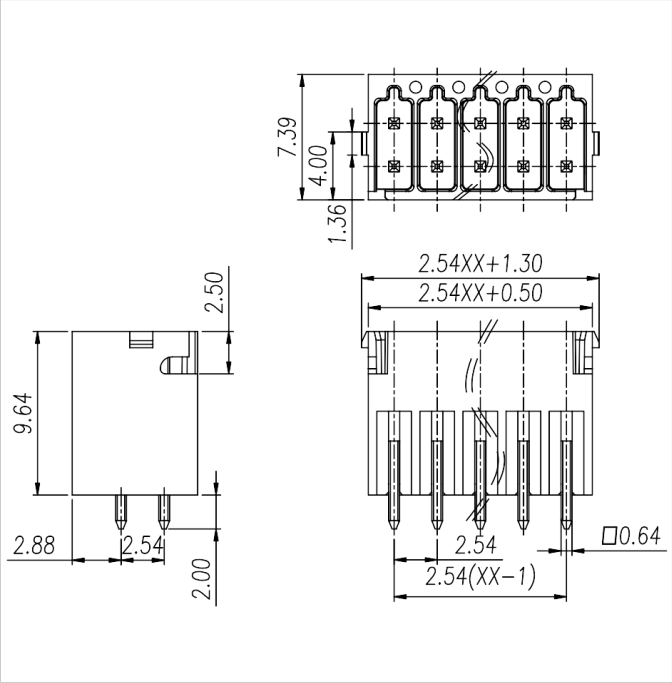

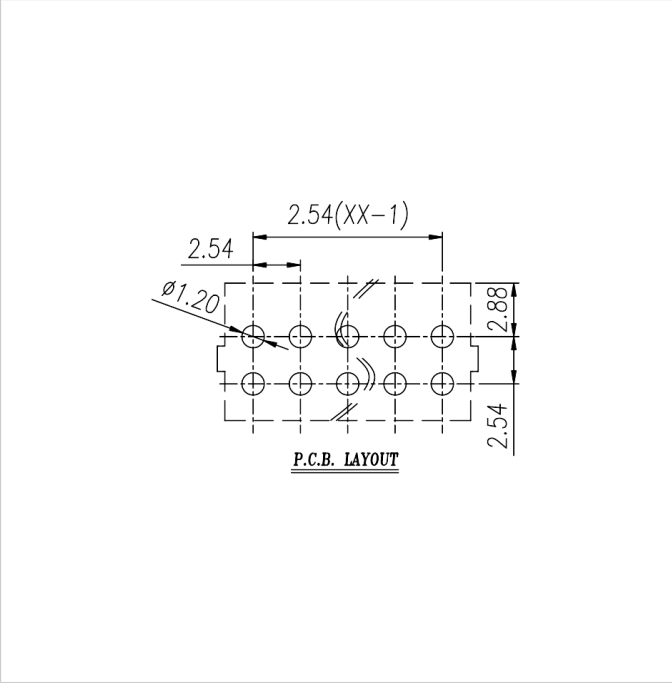

适配产品

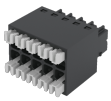

WJ15KVH-2.54