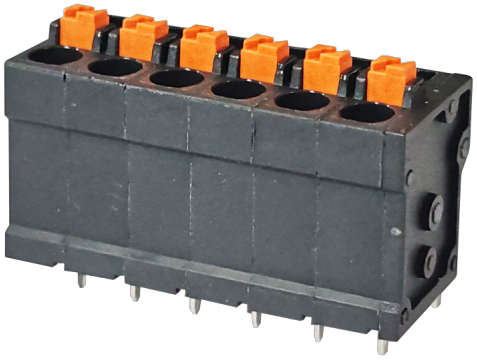

额定电流: 10A

额定电压: 300V

使用线径: 28-16AWG

间距:5.0mm

目录仅供参考，实际规格依产品工程图为准 版本1.0

## 技术数据-UL/CUL

| 等级 Use Group | B | C | D |
|---|---|---|---|
| 额定电压 Rate Voltage [V] | 300 | 50 | 300 |
| 额定电流 Rated Current [A] | 10 | 10 | 10 |
| 接线范围 Wire Range [AWG] | | 28-16 | |
| 耐电压 Dielectric Voltage-Withstand | | 1.6KV | |

## 技术参数-IEC

| 过电压类别 Overvoltage Category | III | III | II |
|---|---|---|---|
| 污染等级 Contamination Class | 3 | 2 | 2 |
| 额定电压 Rated Voltage [V] | 160 | 160 | 320 |
| 额定电流 Rated Current [A] | 10 | 10 | 10 |
| 额定冲击电压 Impulse withstand voltage [KV] | 2.5 | 2.5 | 2.5 |

| | |
|---|---|
| 导线截面积[硬/柔] Conductor cross section [mm²] | 0.2-1.5 |

## 材料 Material

| | |
|---|---|
| 绝缘材料 Insulation Material | PA66 |
| 阻燃等级 Flame relardant rating | UL94V-0 |
| 导体材料 Conductor Material | Copper alloy |
| 导体表面镀层 Plating of conductor surface | Sn plated |

## 一般参数 Other Date

| | |
|---|---|
| 间距/极数 Pitch/Poles [mm]/[P] | 5.0/02-12 |
| 剥线长度 Stripping Length [mm] | 10-12 |
| 螺丝/扭矩 Screw/Torque(Max)[N.m] | - |
| 工作温度 Operating temperature [℃] | -40～+105 |
| 焊锡温度 Soldering temperature | 260℃/5S |
| 引针尺寸 Pin dimensions [mm] | 0.4*0.8 |
| PCB板孔径 PCB Hole Diameter [mm] | □1.2 |

## 尺寸图

## PCB开孔图

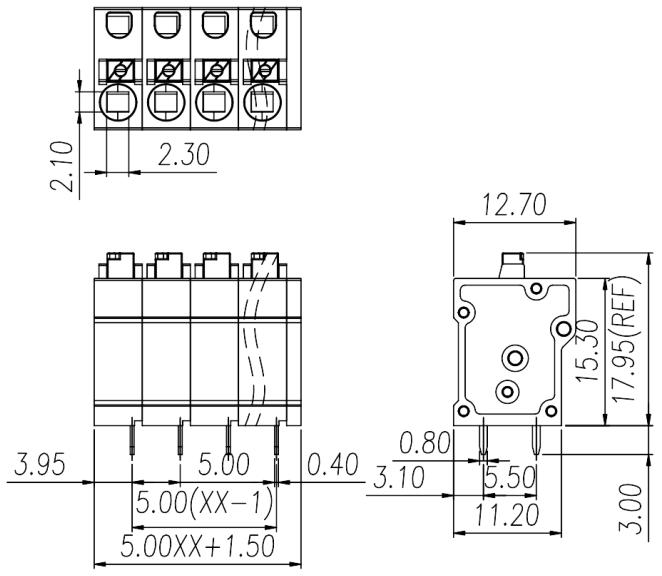
2.10
2.30
12.70
15.30
17.95(REF)
3.95
5.00
0.40
5.00(XX-1)
5.00XX+1.50
0.80
3.10
5.50
11.20
3.00

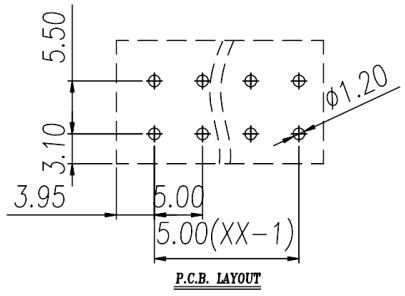
5.50
3.10
3.95
5.00
5.00(XX-1)
φ1.20
P.C.B. LAYOUT