Rated current: 12A

Rated voltage: 300V

Use wire diameter: 26-14AWG

spacing:5.0mm

Install: Wave soldering

The catalog is for reference only. The actual specifications are subject to the product engineering drawings. version 1.0

UL/CUL

Use Group	B	C	D
Rate Voltage [V]	300	-	300
Rated Current [A]	12	-	10
Wire Range [AWG]	26～14		
Dielectric Voltage-Withstand	1.6KV		

IEC

Overvoltage Category	III	III	II
Contamination Class	3	2	2
Rated Voltage [V]	250	400	630
Rated Current [A]	17.5	17.5	17.5

Impulse withstand voltage [KV]	4	4	4
Conductor cross section [mm²]	0.2~1.5		

Material

Insulation Material	PA66
Flame relardant rating	UL94V-0
Conductor Material	Copper alloy
Plating of conductor surface	Sn plated

Other Date

Pitch/Poles [mm]/[P]	5.0/2～24
Stripping Length [mm]	5-6
Screw/Torque(Max)[N.m]	M2.5/0.4
Operating temperature [℃]	-40～+105
Soldering method	Wave soldering
Pin dimensions [mm]	0.6*0.9
PCB Hole Diameter [mm]	Ø1.3

Dimensions

PCB hole diagram

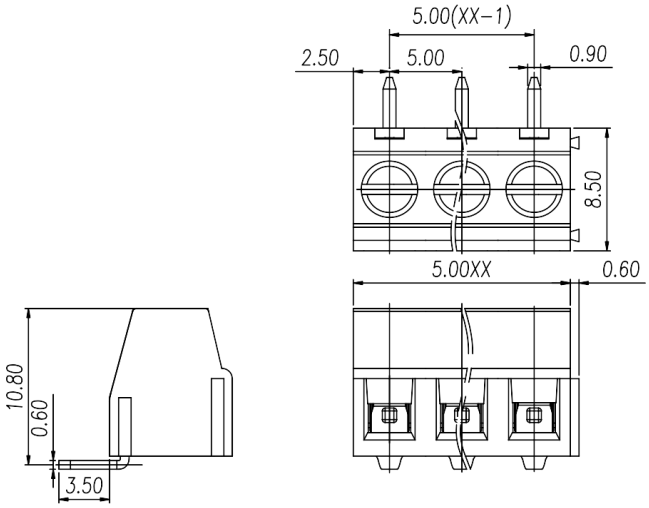
5.00(XX−1)
2.50
5.00
0.90
8.50
5.00XX
0.60
10.80
0.60
3.50

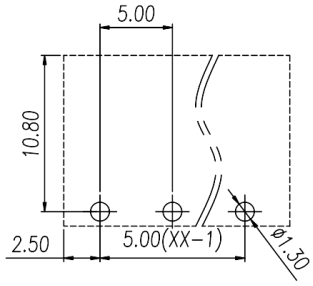
5.00
10.80
2.50
5.00(XX−1)
Ø1.30

P.C.B. LAYOUT