M12 Female Panel Mount, Solder Type, Front Fastened

The catalog is for reference only. The actual specifications are subject to the product engineering drawings. version 1.0

Connector Series: M12

Gender	Female
Coding	A,B,C,D
Locking Type	Fix Screw
Mounting Type	Front Fastened
Part No	M12-X**-ST0-F02-BQ*

Technical Data

Standard	IEC61076-2-101
Ambient Temperatur	-40℃~+105℃
Insulation Resistance	≥100MΩ
Contact Resistance	≤5mΩ

IP Class	IP67
Mating Endurance	>100 Mating Cycles

Material Data

Connector Carriers	PA
Connector Contacts	Copper Alloy With Gold Plated
Connector Nut/Screw	Copper Alloy With Nickel Plated
Shielding	Unshielded
Seal/O-Ring	FKM
Contacts Termination	Solder Type

Electrical Data & Mechanical Date

Contacts Pin [Pins]	3	4	5	6	8	12	17
Rated Current [A]	4	4	4/2	2	2	1.5	1.5
Voltage AC/DC [V]	250/250	250/250	60/60	30/30	30/30	30/30	30/30
Wire Range AWG/mm²	22/0.34	22/0.34	22,24/0.34,0.25 (C-code)	24/0.25	24/0.25	26/0.14	26/0.14

Dimensions

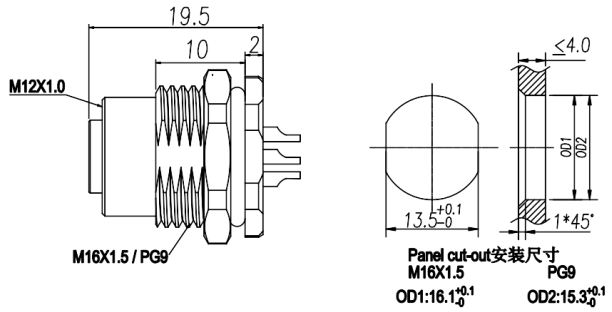
19.5
10
2
M12X1.0
M16X1.5 / PG9
≤4.0
OD1
OD2
13.5+0.1 -0
1*45°
Panel cut-out安装尺寸
M16X1.5
PG9
OD1:16.1+0.1 -0
OD2:15.3+0.1 -0