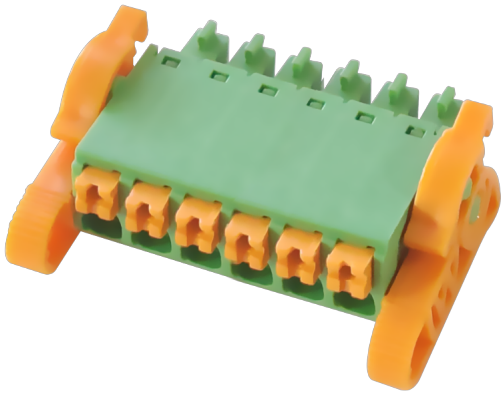

Rated current: 10A

Rated voltage: 300V

Use wire diameter: 28-16AWG

spacing:3.5mm

Install:

The catalog is for reference only. The actual specifications are subject to the product engineering drawings. version 1.0

UL/CUL

Use Group	B	C	D
Rate Voltage [V]	300	-	300
Rated Current [A]	10	-	10
Wire Range [AWG]	28-16		
Dielectric Voltage-Withstand	1.6KV		

IEC

Overvoltage Category	III	III	II
Contamination Class	3	2	2
Rated Voltage [V]	160	160	320
Rated Current [A]	10	10	10

Impulse withstand voltage [KV]	2.5	2.5	2.5
Conductor cross section [mm²]	0.2-1.5		

Material

Insulation Material	PA66
Flame relardant rating	UL94V-0
Conductor Material	Copper alloy
Plating of conductor surface	Sn plated

Other Date

Pitch/Poles [mm]/[P]	3.5/2-24
Stripping Length [mm]	9-10
Screw/Torque(Max)[N.m]	-
Operating temperature [℃]	-40～+105

Dimensions

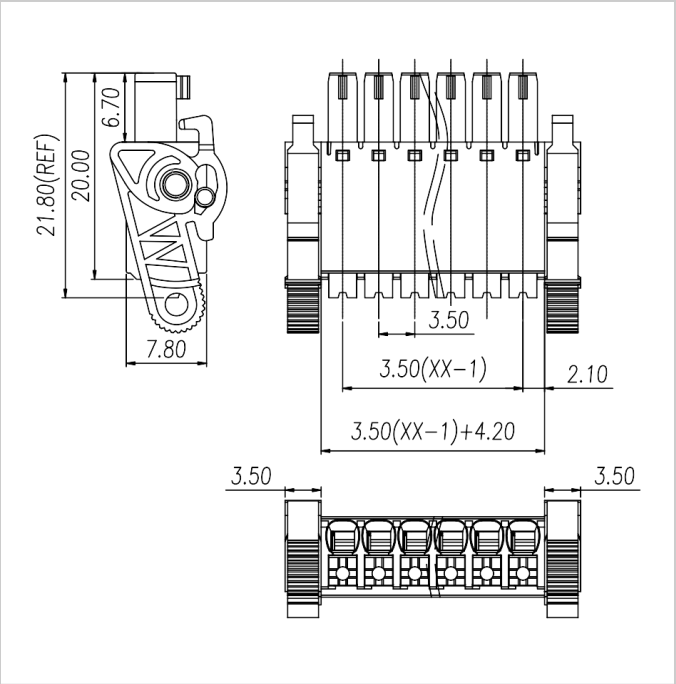

Accessories

WJ15EDGVMG-3.5

WJ15EDGRMG-3.5