WANJIE

慈溪市万捷电子有限公司

慈溪市万捷电子有限公司

地 址：中国浙江省慈溪市逍林镇樟新南路219号
邮 编：315321
电 话：+86-574-63510583　63510584　63516866
传 真：+86-574-63510580　63519360
网 址：http://www.china-wj.com
邮 箱：cjw@china-wj.com

CIXI WANJIE ELECTRONIC CO., LTD.

Add.: #219, Zhangxin South Rd, Xiaolin Town, Cixi,
Zhejiang, China.　　P.C: 315321
Tel: +86-574-63510582　63510586
Fax: +86-574-63507658　63510580
Website: http://www.china-wj.com
E-mail: cjw@china-wj.com

CIXI WANJIE ELECTRONIC CO., LTD.

WANJIE

RoHS ISO14001 ISO45001 ISO9001 ISO80079-34 ISO/TS 22163



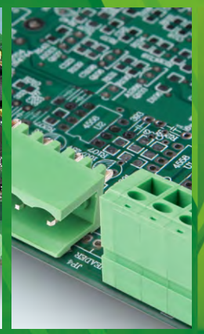

WANJIE 万捷电子
ELECTRONIC

VERSION 1.0

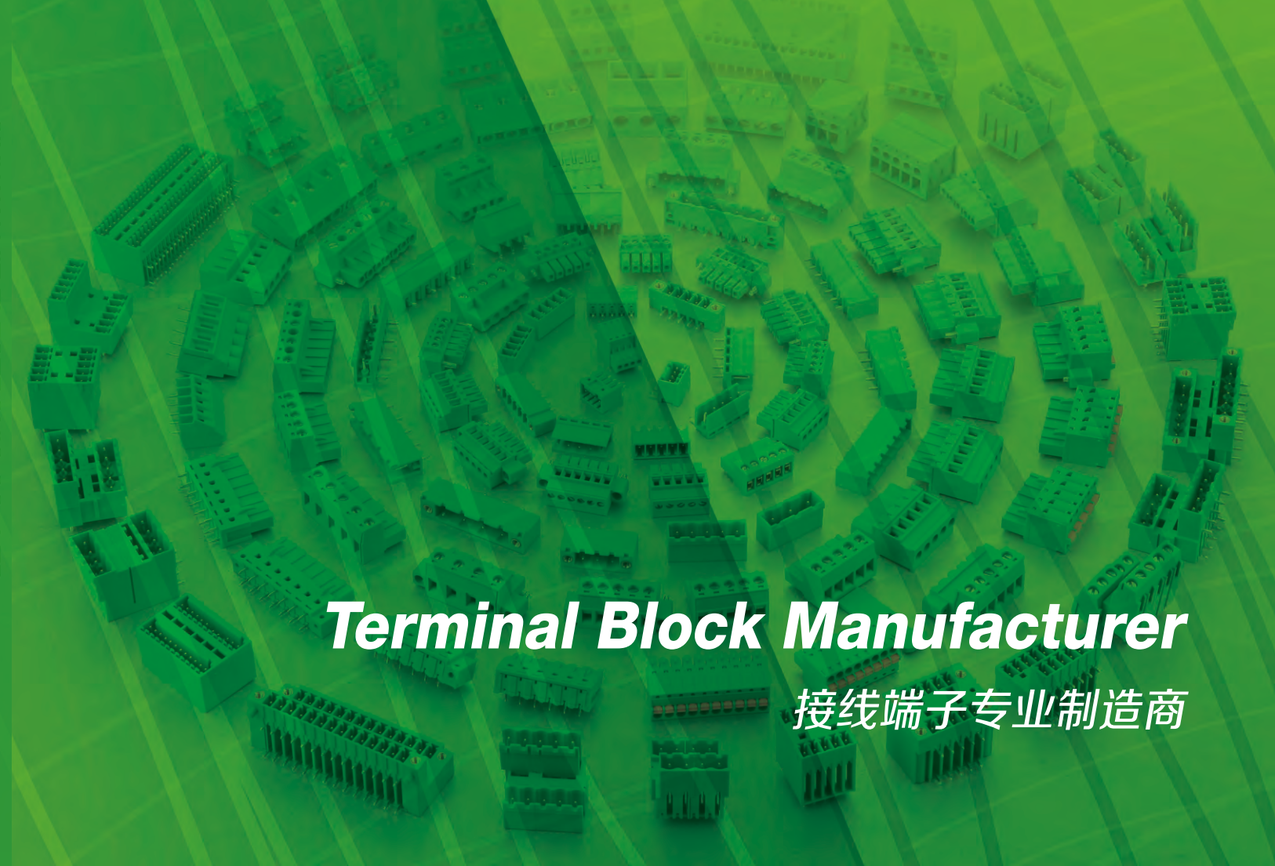

Terminal Block Manufacturer

接线端子专业制造商

企业简介 接线端子专业制造商

万捷电子创建于 1992 年，2000年正式注册为慈溪市万捷电子有限公司。公司坐落于浙江慈溪，占地面积 15000 平方米。万捷是一家从事接线端子研发、设计、加工、生产、销售及服务一体化的专业制造商。产品包含螺钉式 PCB 接线端子、插拔式接线端子、弹簧 PCB式接线端子、MCS 多用途连接器、贯通式接线端子，栅栏式接线端子，轨道式接线端子，圆形连接器等系列；广泛应用与电力控制、自动化控制、电梯、仪器仪表、通讯、电源、安防、照明、轨道交通等相关领域。

公司通过ISO9001、ISO14001、ISO45001、ISO80079-34、IATF16949、ISO/TS 22163 等体系认证， 并通过UL、CUL、VDE、EX、CQC、CE、ROHS、REACH等相关产品认证，取得多种专利证书。

公司拥有优秀的管理团队、专业研发和品保团队，先进的加工生产设备和完善的品质检验体系，先进的检验设备及 UL和 VDE-TDAP目击实验室，确保产品的品质达到相关标准要求及适用的法律法规的需求。利用 ERP\OA 网络办公资源，不断提升内部的办公效率、流程化和标准化，通过降低浪费和降本增效来提高公司在国际、国内市场的适应能力与生存能力。

经过 20 多年的发展产品畅销于世界几十个国家，“万捷品牌”得到了客户的一致好评，并在国内取得了诚信企业、和谐企业、劳动保障管理等多个荣誉证书。

BRIEF INTRODUCTION

万捷电子 WANJIE ELECTRONIC

WANJIE ELECTRONIC was founded in 1992 and officially registered as CIXI WANJIE Electronics Co., Ltd. in 2000. The company is located in CIXI, Zhejiang, covering an area of 15,000 square meters. WANJIE is a professional manufacturer engaged in the research and development, design, processing, production, sales and service of terminal blocks. Products include screw type PCB, plug-in, spring type PCB, MCS multi-purpose, feed through, barrier, din rail, circular connectors etc series; Products widely used in power control, automation control, elevator, instrumentation, communication, power supply, security, lighting, rail transit and other related fields.

The company has passed ISO9001, ISO14001, ISO45001, ISO80079-34, IATF16949, ISO/TS 22163 etc management system and products passed UL, CUL, VDE, EX, CQC, CE, ROHS, REACH etc related certification, also obtained a variety of patent.

The company has an excellent management team, professional R&D and quality assurance team, advanced processing and production equipment and a complete quality inspection system, advanced inspection equipment and UL & VDE-TDAP witness laboratories to ensure that the quality of products meet relevant standard and the requirement of law and regulations. Use ERP\OA network office software to continuously improve the internal office efficiency, process and standardization and also improve the company's adaptability and viability in the international and domestic market by reducing waste and cost.

The products have been sold well in dozens of countries after more than 20 years development, and "WANJIE brand" get unanimous praise from customers and company also obtained Integrity enterprise, harmonious enterprise, labor security company etc a number of honorary certificates.














研发创新 R&D INNOVATION
接线端子专业制造商

万捷电子诚邀国内外行业精英，设立研发中心，建立技术创新平台。基于此研发和技术创新平台，公司对市场做出更快速的反应、集成多方资源，为国内外客户提供最直接、最优质的技术支持等服务。

万捷电子将研发与市场的需求紧密相结合，与最终用户共同合作，创造出具有国际竞争力的产品。

WANJIE Company invites many industry elites to set up R&D center, and establish the technological innovation platform, basing on the platform, we can make faster reaction on the market, and integrate all resources to provide the market, and integrate all resources to provide the most direct and best service for all of our customers.
WANJIE Company also make a closely integration between research and market, and cooperate with end customers, to create an international competitive products.







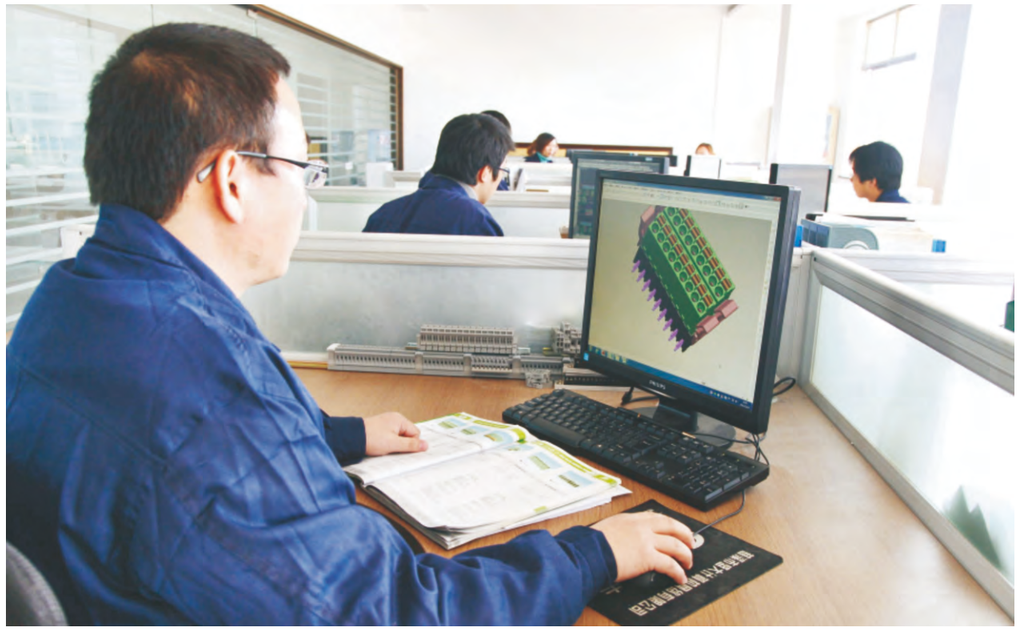

生产设备 PRODUCTION EQUIPMENT
接线端子专业制造商



① 注塑车间
Injection workshop

② 组装流水线
Assembly line

③ AQ400Ls 慢走丝
AQ400Ls wedm-ls

④ 冲压车间
Stamping Workshop

⑤~⑥ 自动生产线
Automatic production line











检测设备 TESTING EQUIPMENT

接线端子专业制造商







万捷电子拥有领先的生产设备，丰富专业知识和经验的研发团队，公司本着对完美品质的不懈追求，在塑料成型，金属加工，产品装配等每个环节上严格贯彻ISO9001质量体系，并采用国际先进的检测设备对产品进行相关的性能测试，最大限度满足客户的需求。

WANJIE Company has advanced production equipment, a wealth of professional knowledge and experience to ensure the coordination between development and production. Based on the pursuit of perfect quality, we implement the ISO9001 Quality Control System in the each step, such as, the plastic housing processing, metal parts production, surface treatment, assemble and so on. On the other hand, we adopt the advance testing equipment to make systematic testing in each circle in the production, so that to meet the exacting demands of customers.









销售网络 MARKETING NETWORK

接线端子专业制造商

万捷电子经过多年的发展，以高质量的产品，优质的服务和强大的物流体系，获得客户的信赖，并在全球建立了全面的销售网络，以便我们能及时与客户沟通和提供服务，达到合作共赢，共同发展。

Through many years development, basing on high quality and excellent service, we have established a comprehensive sales network in the world, we also built lots of offices in many regions so that we can make a timely communication with customers, and provide a good promise and guarantee accordingly.

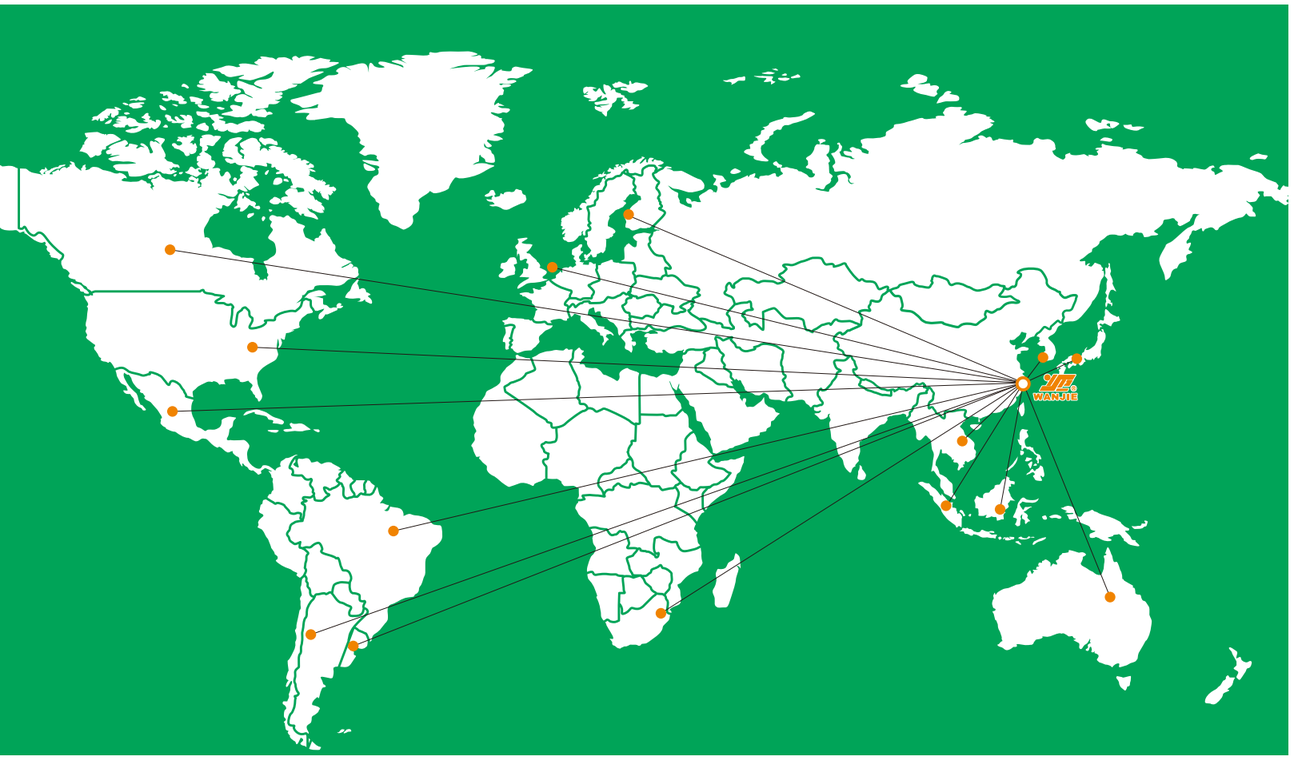



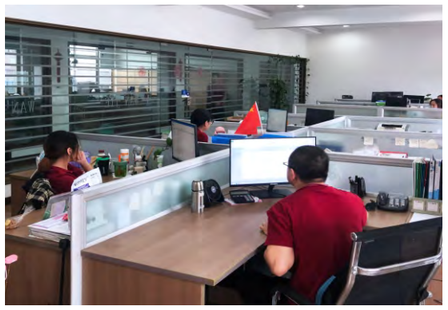





OUR ETERNAL PURPOSE:

Excellence, quality first, service-oriented,
continuous improvement and customer satisfaction

我们的宗旨:

精益求精，质量为先，服务第一，持续改善，顾客满意

www.china-wj.com

Terminal Block Professional Manufacturer

产品目录 PRODUCT CONTENTS

接线端子专业制造商

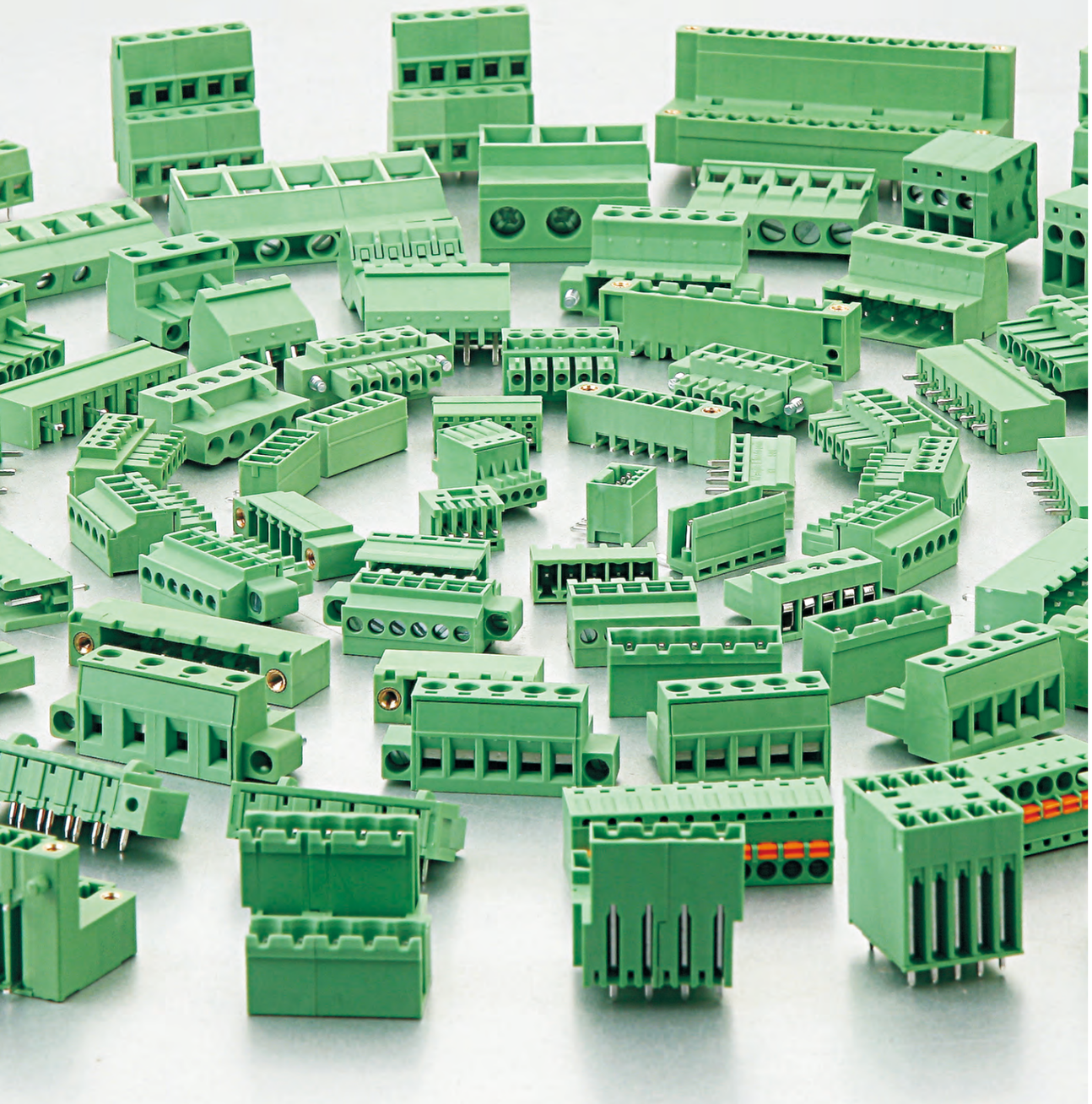



螺钉式PCB接线端子
PCB SCREW TERMINAL BLOCK

订购方式/HOW TO ORDER：

□□□-□□P-□□-XXX客户需求 Custmor Request

型号 Model　极数 Pole　颜色Color

0	未定义No definition	1	灰色Grey	4	绿色Green	7	透明Transp.
1	单倍间距Single pitch	2	蓝色Blue	5	橙色Orange	8	黄色Yellow
2	双倍间距Double pitch	3	黑色Black	6	红色Red	9	白色White

P013-046



插拔式接线端子
PLUG-IN TERMINAL BLOCK

订购方式/HOW TO ORDER：

□□□-□□P-□□-XXX客户需求 Custmor Request

型号 Model　极数 Pole　颜色Color

0	未定义No definition	1	灰色Grey	4	绿色Green	7	透明Transp.
1	单倍间距Single pitch	2	蓝色Blue	5	橙色Orange	8	黄色Yellow
2	双倍间距Double pitch	3	黑色Black	6	红色Red	9	白色White

P047-154



弹簧式PCB接线端子
PCB SPRING TERMINAL BLOCK

订购方式/HOW TO ORDER：

□□□-□□P-□□-XXX客户需求 Custmor Request

型号 Model　极数 Pole　颜色Color

0	未定义No definition	1	灰色Grey	4	绿色Green	7	透明Transp.
1	单倍间距Single pitch	2	蓝色Blue	5	橙色Orange	8	黄色Yellow
2	双倍间距Double pitch	3	黑色Black	6	红色Red	9	白色White

P155-182

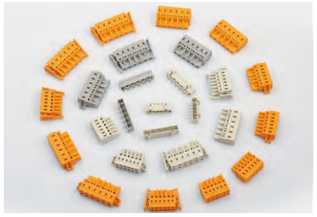

MCS多用途连接器
MCS TERMINAL BLOCK

订购方式/HOW TO ORDER：

□□□-□□□□-XXX客户需求 Custmor Request

型号 Model　极数 Pole　颜色Color

0	未定义No definition	1	灰色Grey	4	绿色Green	7	透明Transp.
1	单倍间距Single pitch	2	蓝色Blue	5	橙色Orange	8	黄色Yellow
2	双倍间距Double pitch	3	黑色Black	6	红色Red	9	白色White

P183-214



贯通式接线端子
FEED THROUGH TERMINAL BLOCK

订购方式/HOW TO ORDER：

□□□-□□P-□□-XXX客户需求 Custmor Request

型号 Model　极数 Pole　颜色Color

0	未定义No definition	1	灰色Grey	4	绿色Green	7	透明Transp.
1	单倍间距Single pitch	2	蓝色Blue	5	橙色Orange	8	黄色Yellow
2	双倍间距Double pitch	3	黑色Black	6	红色Red	9	白色White

P214-220



栅栏式接线端子
BARRIER TERMINAL BLOCK

订购方式/HOW TO ORDER：

□□□-□□P-□□-XXX客户需求 Custmor Request

型号 Model　极数 Pole　颜色Color

0	未定义No definition	1	灰色Grey	4	绿色Green	7	透明Transp.
1	单倍间距Single pitch	2	蓝色Blue	5	橙色Orange	8	黄色Yellow
2	双倍间距Double pitch	3	黑色Black	6	红色Red	9	白色White

P221-268

更多详细信息请来电咨询或登录网站 www.china-wj.com 查询。

www.china-wj.com

Terminal Block Professional Manufacturer

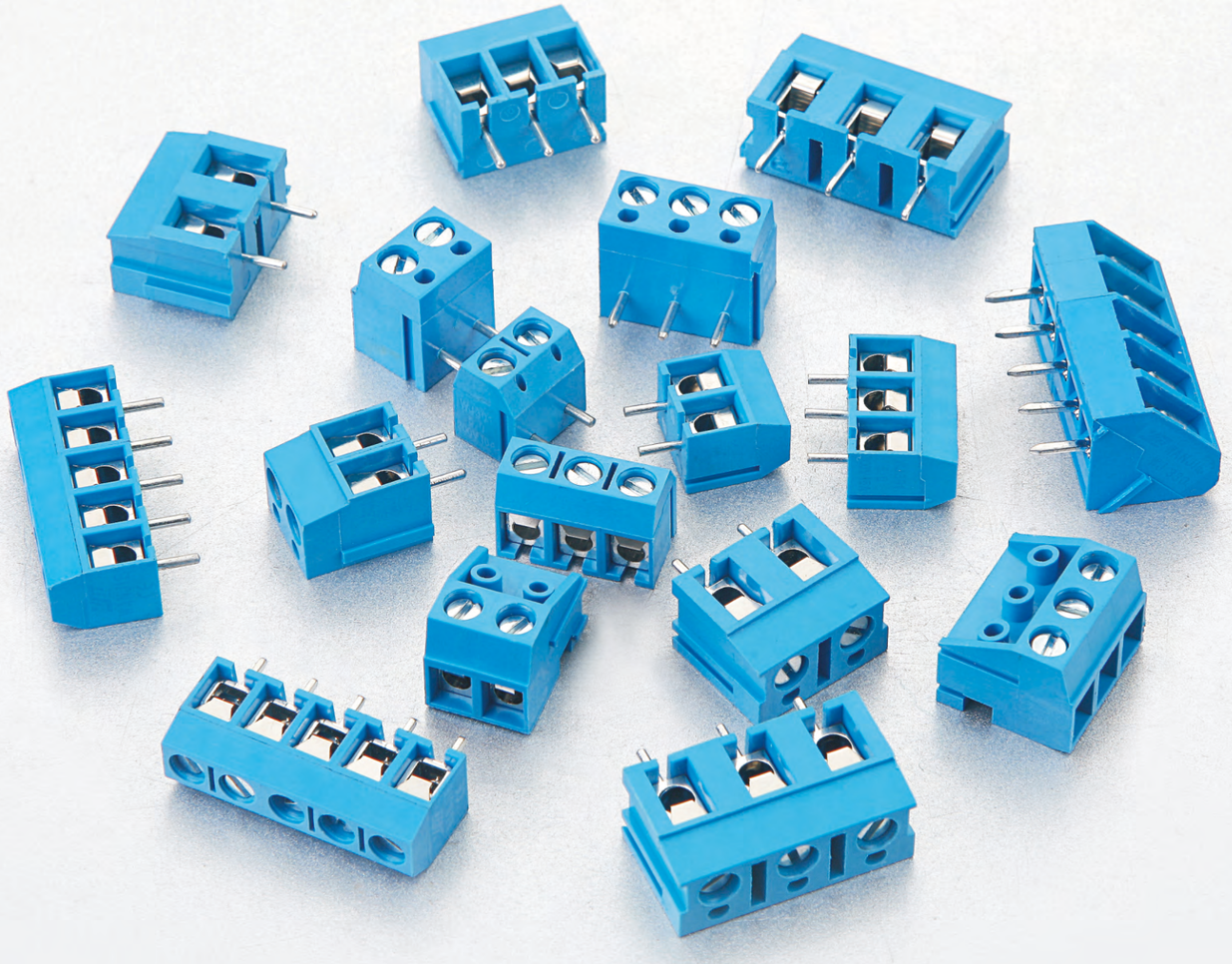

螺钉式PCB接线端子

PCB SCREW TERMINAL BLOCK

螺钉式PCB接线端子，结构设计兼顾了接线方便，螺钉连接牢固的特点，可以连接截面为0.08mm²至 35mm²的所有类型的导线，间距2.54mm至15.0mm可供选择。产品设计符合IEC60947、UL1059、CSA C22.2 No.158等国际标准。

PCB universal screw terminal blocks, this typical feature of the screw connection system is characterized by the easy connection and extremely high contact strengths. Provide the wire size from 0.08mm² to 35mm², Available with different pitches from 2.54mm to 15.0mm. The product is designed in accordance with IEC 60947 , UL1059, CSA C22.2 NO.158 standards.

ISO14001 ISO45001 ISO9001 ISO80079-34 ISO/TS 22163



Pitch:5.0mm

WJ300-5.0

UL/CUL 技术参数 UL/CUL Technical Data				
等级	Use Group	B	C	D
额定电压	Rated Voltage [V]	250	-	250
额定电流	Rated Current [A]	16	-	10
接线范围 Wire Range	单芯线 Solid [AWG]	22~14		
	多芯线 Stranded [AWG]	22~14		
耐电压	Dielectric Voltage-Withstand	1.5KV		
IEC 技术参数 IEC Technical Data				
过电压类别	Overvoltage Category	Ⅲ	Ⅲ	Ⅱ
污染等级	Contamination Class	3	2	2
额定电压	Rated Voltage [V]	250	400	630
额定电流	Rated Current [A]	24	24	24
额定冲击电压	Impulse withstand voltage [KV]	4	4	4
导线截面积 Conductor cross section	硬质导线 Solid[mm²]	0.5~2.5		
	柔性导线 Flexible[mm²]	0.5~2.5		
材料 Material				
绝缘材料	Insulation Material	PA66		
阻燃等级	Flame retardant rating	UL94V-0		
导体材料	Conductor Material	Copper alloy		
导体表面镀层	Plating of conductor surface	Sn plated		
一般参数 Other Data				
间距/极数	Pitch/Poles [mm]/[P]	5.0/2~24		
剥线长度	Stripping Length [mm]	5~6		
螺丝/扭矩	Screw/Torque(Max)[N.m]	M3/0.5		
工作温度	Operating temperature[℃]	-40~+105		
焊锡温度	Soldering temperature	260℃ /5S		
引针尺寸	Pin dimensions [mm]	∅1.0		
PCB板孔径	PCB Hole Diameter [mm]	∅1.2		

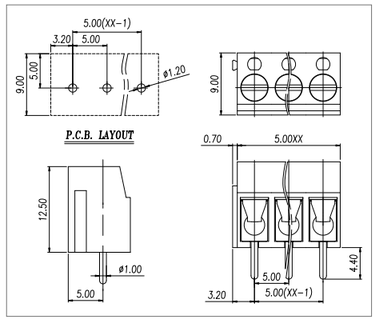



Pitch:5.0mm

WJ300R-5.0

UL/CUL 技术参数 UL/CUL Technical Data				
等级	Use Group	B	C	D
额定电压	Rated Voltage [V]	250	-	250
额定电流	Rated Current [A]	16	-	10
接线范围 Wire Range	单芯线 Solid [AWG]	22~14		
	多芯线 Stranded [AWG]	22~14		
耐电压	Dielectric Voltage-Withstand	1.5KV		
IEC 技术参数 IEC Technical Data				
过电压类别	Overvoltage Category	Ⅲ	Ⅲ	Ⅱ
污染等级	Contamination Class	3	2	2
额定电压	Rated Voltage [V]	250	400	630
额定电流	Rated Current [A]	24	24	24
额定冲击电压	Impulse withstand voltage [KV]	4	4	4
导线截面积 Conductor cross section	硬质导线 Solid[mm²]	0.5~2.5		
	柔性导线 Flexible[mm²]	0.5~2.5		
材料 Material				
绝缘材料	Insulation Material	PA66		
阻燃等级	Flame retardant rating	UL94V-0		
导体材料	Conductor Material	Copper alloy		
导体表面镀层	Plating of conductor surface	Sn plated		
一般参数 Other Data				
间距/极数	Pitch/Poles [mm]/[P]	5.0/2~24		
剥线长度	Stripping Length [mm]	5~6		
螺丝/扭矩	Screw/Torque(Max)[N.m]	M3/0.5		
工作温度	Operating temperature[℃]	-40~+105		
焊锡温度	Soldering temperature	260℃ /5S		
引针尺寸	Pin dimensions [mm]	∅1.0		
PCB板孔径	PCB Hole Diameter [mm]	∅1.2		

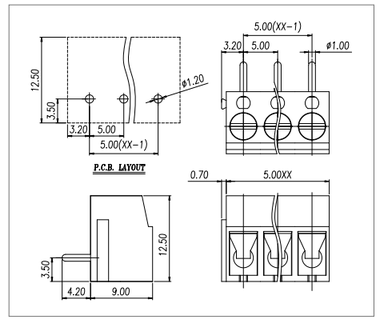



Pitch:5.0mm

WJ305-5.0

UL/CUL 技术参数 UL/CUL Technical Data				
等级	Use Group	B	C	D
额定电压	Rated Voltage [V]	250	-	250
额定电流	Rated Current [A]	16	-	10
接线范围 Wire Range	单芯线 Solid [AWG]	22~14		
	多芯线 Stranded [AWG]	22~14		
耐电压	Dielectric Voltage-Withstand	1.5KV		
IEC 技术参数 IEC Technical Data				
过电压类别	Overvoltage Category	Ⅲ	Ⅲ	Ⅱ
污染等级	Contamination Class	3	2	2
额定电压	Rated Voltage [V]	250	400	630
额定电流	Rated Current [A]	24	24	24
额定冲击电压	Impulse withstand voltage [KV]	4	4	4
导线截面积 Conductor cross section	硬质导线 Solid[mm²]	0.5~2.5		
	柔性导线 Flexible[mm²]	0.5~2.5		
材料 Material				
绝缘材料	Insulation Material	PA66		
阻燃等级	Flame retardant rating	UL94V-0		
导体材料	Conductor Material	Copper alloy		
导体表面镀层	Plating of conductor surface	Sn plated		
一般参数 Other Data				
间距/极数	Pitch/Poles [mm]/[P]	5.0/2~24		
剥线长度	Stripping Length [mm]	5~6		
螺丝/扭矩	Screw/Torque(Max)[N.m]	M2.5/0.4		
工作温度	Operating temperature[℃]	-40~+105		
焊锡温度	Soldering temperature	260℃ /5S		
引针尺寸	Pin dimensions [mm]	0.6*1.1		
PCB板孔径	PCB Hole Diameter [mm]	∅1.5		

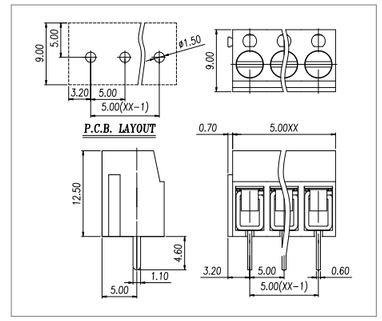

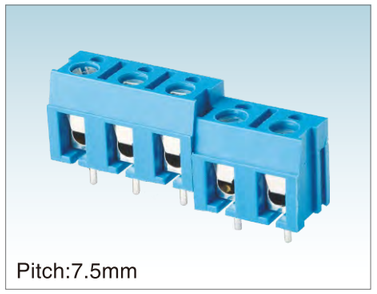

Pitch:7.5mm

WJ370-7.5

UL/CUL 技术参数 UL/CUL Technical Data				
等级	Use Group	B	C	D
额定电压	Rated Voltage [V]	250	-	250
额定电流	Rated Current [A]	16	-	10
接线范围 Wire Range	单芯线 Solid [AWG]	22~14		
	多芯线 Stranded [AWG]	22~14		
耐电压	Dielectric Voltage-Withstand	1.5KV		
IEC 技术参数 IEC Technical Data				
过电压类别	Overvoltage Category	Ⅲ	Ⅲ	Ⅱ
污染等级	Contamination Class	3	2	2
额定电压	Rated Voltage [V]	250	400	630
额定电流	Rated Current [A]	24	24	24
额定冲击电压	Impulse withstand voltage [KV]	6	6	6
导线截面积 Conductor cross section	硬质导线 Solid[mm²]	0.5~2.5		
	柔性导线 Flexible[mm²]	0.5~2.5		
材料 Material				
绝缘材料	Insulation Material	PA66		
阻燃等级	Flame retardant rating	UL94V-0		
导体材料	Conductor Material	Copper alloy		
导体表面镀层	Plating of conductor surface	Sn plated		
一般参数 Other Data				
间距/极数	Pitch/Poles [mm]/[P]	7.5/2~24		
剥线长度	Stripping Length [mm]	5~6		
螺丝/扭矩	Screw/Torque(Max)[N.m]	M3/0.5		
工作温度	Operating temperature[℃]	-40~+105		
焊锡温度	Soldering temperature	260℃ /5S		
引针尺寸	Pin dimensions [mm]	∅1.0		
PCB板孔径	PCB Hole Diameter [mm]	∅1.2		

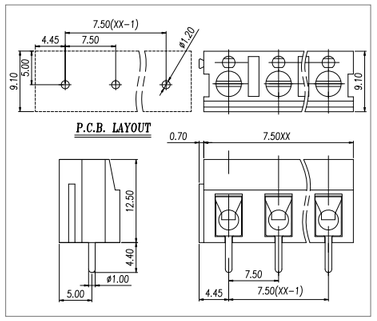

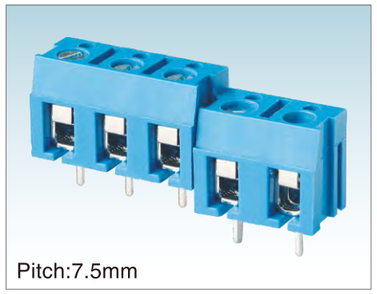

Pitch:7.5mm

WJ375-7.5

UL/CUL 技术参数 UL/CUL Technical Data				
等级	Use Group	B	C	D
额定电压	Rated Voltage [V]	250	-	250
额定电流	Rated Current [A]	16	-	10
接线范围 Wire Range	单芯线 Solid [AWG]	22~14		
	多芯线 Stranded [AWG]	22~14		
耐电压	Dielectric Voltage-Withstand	1.5KV		
IEC 技术参数 IEC Technical Data				
过电压类别	Overvoltage Category	Ⅲ	Ⅲ	Ⅱ
污染等级	Contamination Class	3	2	2
额定电压	Rated Voltage [V]	250	400	630
额定电流	Rated Current [A]	24	24	24
额定冲击电压	Impulse withstand voltage [KV]	4	4	4
导线截面积 Conductor cross section	硬质导线 Solid[mm²]	0.5~2.5		
	柔性导线 Flexible[mm²]	0.5~2.5		
材料 Material				
绝缘材料	Insulation Material	PA66		
阻燃等级	Flame retardant rating	UL94V-0		
导体材料	Conductor Material	Copper alloy		
导体表面镀层	Plating of conductor surface	Sn plated		
一般参数 Other Data				
间距/极数	Pitch/Poles [mm]/[P]	7.5/2~24		
剥线长度	Stripping Length [mm]	5~6		
螺丝/扭矩	Screw/Torque(Max)[N.m]	M2.5/0.4		
工作温度	Operating temperature[℃]	-40~+105		
焊锡温度	Soldering temperature	260℃ /5S		
引针尺寸	Pin dimensions [mm]	1.1*0.6		
PCB板孔径	PCB Hole Diameter [mm]	∅1.5		

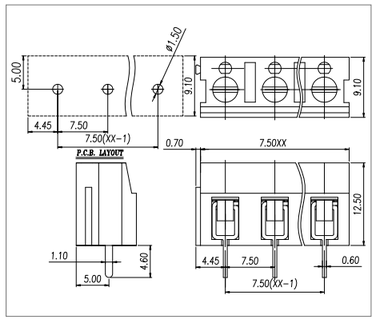

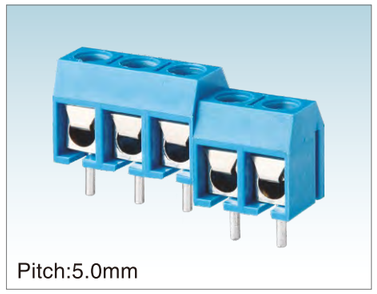

Pitch:5.0mm

WJ301-5.0

UL/CUL 技术参数 UL/CUL Technical Data				
等级	Use Group	B	C	D
额定电压	Rated Voltage [V]	250	-	250
额定电流	Rated Current [A]	16	-	10
接线范围 Wire Range	单芯线 Solid [AWG]	22~14		
	多芯线 Stranded [AWG]	22~14		
耐电压	Dielectric Voltage-Withstand	1.5KV		
IEC 技术参数 IEC Technical Data				
过电压类别	Overvoltage Category	Ⅲ	Ⅲ	Ⅱ
污染等级	Contamination Class	3	2	2
额定电压	Rated Voltage [V]	250	400	630
额定电流	Rated Current [A]	17.5	17.5	17.5
额定冲击电压	Impulse withstand voltage [KV]	4	4	4
导线截面积 Conductor cross section	硬质导线 Solid[mm²]	0.5~1.5		
	柔性导线 Flexible[mm²]	0.5~1.5		
材料 Material				
绝缘材料	Insulation Material	PA66		
阻燃等级	Flame retardant rating	UL94V-0		
导体材料	Conductor Material	Copper alloy		
导体表面镀层	Plating of conductor surface	Sn plated		
一般参数 Other Data				
间距/极数	Pitch/Poles [mm]/[P]	5.0/2~24		
剥线长度	Stripping Length [mm]	5~6		
螺丝/扭矩	Screw/Torque(Max)[N.m]	M2.5/0.4		
工作温度	Operating temperature[℃]	-40~+105		
焊锡温度	Soldering temperature	260℃ /5S		
引针尺寸	Pin dimensions [mm]	∅1.0		
PCB板孔径	PCB Hole Diameter [mm]	∅1.2		

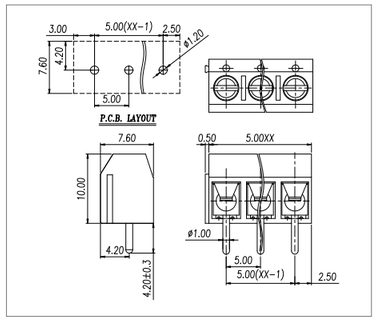

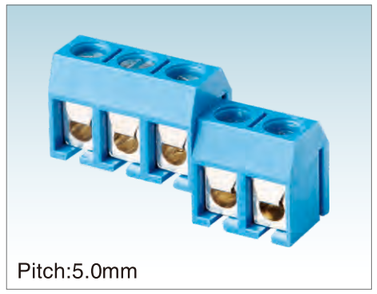

Pitch:5.0mm

WJ301R-5.0

UL/CUL 技术参数 UL/CUL Technical Data				
等级	Use Group	B	C	D
额定电压	Rated Voltage [V]	250	-	250
额定电流	Rated Current [A]	16	-	10
接线范围 Wire Range	单芯线 Solid [AWG]	22~14		
	多芯线 Stranded [AWG]	22~14		
耐电压	Dielectric Voltage-Withstand	1.5KV		
IEC 技术参数 IEC Technical Data				
过电压类别	Overvoltage Category	Ⅲ	Ⅲ	Ⅱ
污染等级	Contamination Class	3	2	2
额定电压	Rated Voltage [V]	250	400	630
额定电流	Rated Current [A]	17.5	17.5	17.5
额定冲击电压	Impulse withstand voltage [KV]	4	4	4
导线截面积 Conductor cross section	硬质导线 Solid[mm²]	0.5~1.5		
	柔性导线 Flexible[mm²]	0.5~1.5		
材料 Material				
绝缘材料	Insulation Material	PA66		
阻燃等级	Flame retardant rating	UL94V-0		
导体材料	Conductor Material	Copper alloy		
导体表面镀层	Plating of conductor surface	Sn plated		
一般参数 Other Data				
间距/极数	Pitch/Poles [mm]/[P]	5.0/2~24		
剥线长度	Stripping Length [mm]	5~6		
螺丝/扭矩	Screw/Torque(Max)[N.m]	M2.5/0.4		
工作温度	Operating temperature[℃]	-40~+105		
焊锡温度	Soldering temperature	260℃ /5S		
引针尺寸	Pin dimensions [mm]	∅1.0		
PCB板孔径	PCB Hole Diameter [mm]	∅1.2		

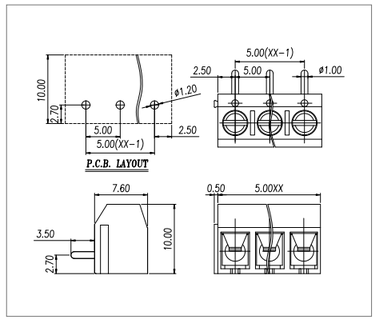

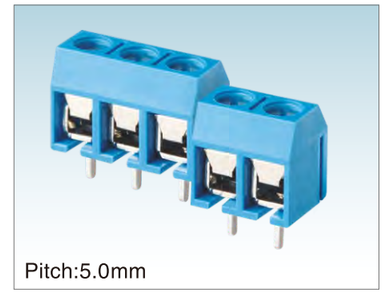

Pitch:5.0mm

WJ306-5.0

UL/CUL 技术参数 UL/CUL Technical Data				
等级	Use Group	B	C	D
额定电压	Rated Voltage [V]	250	-	250
额定电流	Rated Current [A]	16	-	10
接线范围 Wire Range	单芯线 Solid [AWG]	22~14		
	多芯线 Stranded [AWG]	22~14		
耐电压	Dielectric Voltage-Withstand	1.5KV		
IEC 技术参数 IEC Technical Data				
过电压类别	Overvoltage Category	Ⅲ	Ⅲ	Ⅱ
污染等级	Contamination Class	3	2	2
额定电压	Rated Voltage [V]	250	400	630
额定电流	Rated Current [A]	17.5	17.5	17.5
额定冲击电压	Impulse withstand voltage [KV]	4	4	4
导线截面积 Conductor cross section	硬质导线 Solid[mm²]	0.5~1.5		
	柔性导线 Flexible[mm²]	0.5~1.5		
材料 Material				
绝缘材料	Insulation Material	PA66		
阻燃等级	Flame retardant rating	UL94V-0		
导体材料	Conductor Material	Copper alloy		
导体表面镀层	Plating of conductor surface	Sn plated		
一般参数 Other Data				
间距/极数	Pitch/Poles [mm]/[P]	5.0/2~24		
剥线长度	Stripping Length [mm]	5~6		
螺丝/扭矩	Screw/Torque(Max)[N.m]	M2.5/0.4		
工作温度	Operating temperature[℃]	-40~+105		
焊锡温度	Soldering temperature	260℃ /5S		
引针尺寸	Pin dimensions [mm]	0.6*1.0		
PCB板孔径	PCB Hole Diameter [mm]	∅1.4		

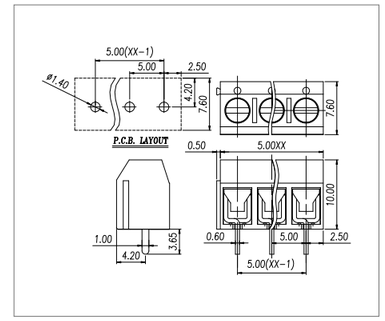



Pitch:5.0mm

WJ331-5.0

UL/CUL 技术参数 UL/CUL Technical Data				
等级	Use Group	B	C	D
额定电压	Rated Voltage [V]	300	-	300
额定电流	Rated Current [A]	12	-	10
接线范围 Wire Range	单芯线 Solid [AWG]	28~14		
	多芯线 Stranded [AWG]	28~14		
耐电压	Dielectric Voltage-Withstand	1.6KV		
IEC 技术参数 IEC Technical Data				
过电压类别	Overvoltage Category	Ⅲ	Ⅲ	Ⅱ
污染等级	Contamination Class	3	2	2
额定电压	Rated Voltage [V]	250	320	400
额定电流	Rated Current [A]	12	12	12
额定冲击电压	Impulse withstand voltage [KV]	4	4	4
导线截面积 Conductor cross section	硬质导线 Solid[mm²]	0.5~1.5		
	柔性导线 Flexible[mm²]	0.5~1.5		
材料 Material				
绝缘材料	Insulation Material	PA66		
阻燃等级	Flame retardant rating	UL94V-0		
导体材料	Conductor Material	Copper alloy		
导体表面镀层	Plating of conductor surface	Sn plated		
一般参数 Other Data				
间距/极数	Pitch/Poles [mm]/[P]	5.0/2~24		
剥线长度	Stripping Length [mm]	5~6		
螺丝/扭矩	Screw/Torque(Max)[N.m]	M2.5/0.4		
工作温度	Operating temperature[℃]	-40~+105		
焊锡温度	Soldering temperature	/		
引针尺寸	Pin dimensions [mm]	/		
PCB板孔径	PCB Hole Diameter [mm]	/		

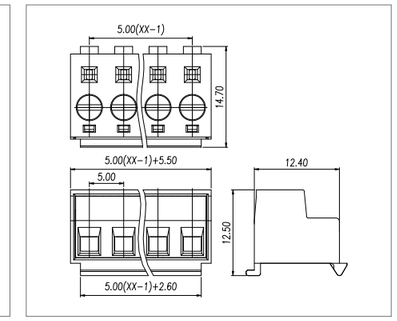



Pitch:5.0mm

WJ332K-5.0

UL/CUL 技术参数 UL/CUL Technical Data				
等级	Use Group	B	C	D
额定电压	Rated Voltage [V]	300	-	300
额定电流	Rated Current [A]	10	-	10
接线范围 Wire Range	单芯线 Solid [AWG]	28~16		
	多芯线 Stranded [AWG]	28~16		
耐电压	Dielectric Voltage-Withstand	1.6KV		
IEC 技术参数 IEC Technical Data				
过电压类别	Overvoltage Category	Ⅲ	Ⅲ	Ⅱ
污染等级	Contamination Class	3	2	2
额定电压	Rated Voltage [V]	250	320	400
额定电流	Rated Current [A]	12	12	12
额定冲击电压	Impulse withstand voltage [KV]	4	4	4
导线截面积 Conductor cross section	硬质导线 Solid[mm²]	0.2~1.5		
	柔性导线 Flexible[mm²]	0.2~1.5		
材料 Material				
绝缘材料	Insulation Material	PA66		
阻燃等级	Flame retardant rating	UL94V-0		
导体材料	Conductor Material	Copper alloy		
导体表面镀层	Plating of conductor surface	Sn plated		
一般参数 Other Data				
间距/极数	Pitch/Poles [mm]/[P]	5.0/2~24		
剥线长度	Stripping Length [mm]	5~6		
螺丝/扭矩	Screw/Torque(Max)[N.m]	M2.5/0.4		
工作温度	Operating temperature[℃]	-40~+105		
焊锡温度	Soldering temperature	/		
引针尺寸	Pin dimensions [mm]	/		
PCB板孔径	PCB Hole Diameter [mm]	/		

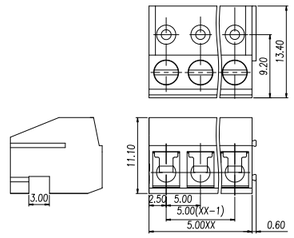



Pitch:3.5mm

WJ333K-3.5

UL/CUL 技术参数 UL/CUL Technical Data				
等级	Use Group	B	C	D
额定电压	Rated Voltage [V]	300	-	300
额定电流	Rated Current [A]	8	-	8
接线范围 Wire Range	单芯线 Solid [AWG]	28~16		
	多芯线 Stranded [AWG]	28~16		
耐电压	Dielectric Voltage-Withstand	1.6KV		
IEC 技术参数 IEC Technical Data				
过电压类别	Overvoltage Category	Ⅲ	Ⅲ	Ⅱ
污染等级	Contamination Class	3	2	2
额定电压	Rated Voltage [V]	160	250	250
额定电流	Rated Current [A]	8	8	8
额定冲击电压	Impulse withstand voltage [KV]	2.5	2.5	2.5
导线截面积 Conductor cross section	硬质导线 Solid[mm²]	0.2~1.0		
	柔性导线 Flexible[mm²]	0.2~1.0		
材料 Material				
绝缘材料	Insulation Material	PA66		
阻燃等级	Flame retardant rating	UL94V-0		
导体材料	Conductor Material	Copper alloy		
导体表面镀层	Plating of conductor surface	Sn plated		
一般参数 Other Data				
间距/极数	Pitch/Poles [mm]/[P]	3.5/2~24		
剥线长度	Stripping Length [mm]	5~6		
螺丝/扭矩	Screw/Torque(Max)[N.m]	M2/0.2		
工作温度	Operating temperature[℃]	-40~+105		
焊锡温度	Soldering temperature	/		
引针尺寸	Pin dimensions [mm]	/		
PCB板孔径	PCB Hole Diameter [mm]	/		

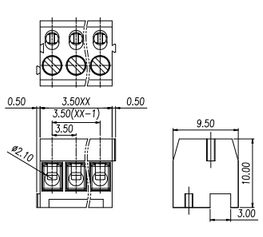



Pitch:3.5mm

WJ335K-3.5

UL/CUL 技术参数 UL/CUL Technical Data				
等级	Use Group	B	C	D
额定电压	Rated Voltage [V]	300	-	300
额定电流	Rated Current [A]	10	-	10
接线范围 Wire Range	单芯线 Solid [AWG]	26~16		
	多芯线 Stranded [AWG]	26~16		
耐电压	Dielectric Voltage-Withstand	1.6KV		
IEC 技术参数 IEC Technical Data				
过电压类别	Overvoltage Category	Ⅲ	Ⅲ	Ⅱ
污染等级	Contamination Class	3	2	2
额定电压	Rated Voltage [V]	160	200	400
额定电流	Rated Current [A]	8	8	8
额定冲击电压	Impulse withstand voltage [KV]	2.5	2.5	2.5
导线截面积 Conductor cross section	硬质导线 Solid[mm²]	0.2~1.5		
	柔性导线 Flexible[mm²]	0.2~1.5		
材料 Material				
绝缘材料	Insulation Material	PA66		
阻燃等级	Flame retardant rating	UL94V-0		
导体材料	Conductor Material	Copper alloy		
导体表面镀层	Plating of conductor surface	Sn plated		
一般参数 Other Data				
间距/极数	Pitch/Poles [mm]/[P]	3.5/2~24		
剥线长度	Stripping Length [mm]	4~5		
螺丝/扭矩	Screw/Torque(Max)[N.m]	M2/0.2		
工作温度	Operating temperature[℃]	-40~+105		
焊锡温度	Soldering temperature	/		
引针尺寸	Pin dimensions [mm]	/		
PCB板孔径	PCB Hole Diameter [mm]	/		

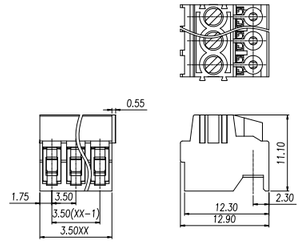

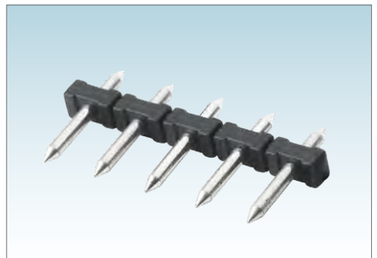

Pitch:5.0mm

WJ332J-5.0

UL/CUL 技术参数 UL/CUL Technical Data				
等级	Use Group	B	C	D
额定电压	Rated Voltage [V]	300	-	300
额定电流	Rated Current [A]	10	-	10
接线范围 Wire Range	单芯线 Solid [AWG]	/		
	多芯线 Stranded [AWG]	/		
耐电压	Dielectric Voltage-Withstand	1.6KV		
IEC 技术参数 IEC Technical Data				
过电压类别	Overvoltage Category	Ⅲ	Ⅲ	Ⅱ
污染等级	Contamination Class	3	2	2
额定电压	Rated Voltage [V]	250	320	400
额定电流	Rated Current [A]	12	12	12
额定冲击电压	Impulse withstand voltage [KV]	4	4	4
导线截面积 Conductor cross section	硬质导线 Solid[mm²]	/		
	柔性导线 Flexible[mm²]	/		
材料 Material				
绝缘材料	Insulation Material	PBT		
阻燃等级	Flame retardant rating	UL94V-0		
导体材料	Conductor Material	Copper alloy		
导体表面镀层	Plating of conductor surface	Sn plated		
一般参数 Other Data				
间距/极数	Pitch/Poles [mm]/[P]	5.0/2~24		
剥线长度	Stripping Length [mm]	/		
螺丝/扭矩	Screw/Torque(Max)[N.m]	/		
工作温度	Operating temperature[℃]	-30~+120		
焊锡温度	Soldering temperature	260℃ /5S		
引针尺寸	Pin dimensions [mm]	∅1.3		
PCB板孔径	PCB Hole Diameter [mm]	∅1.6		

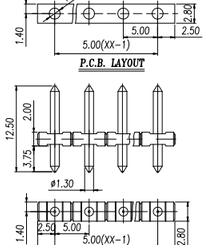

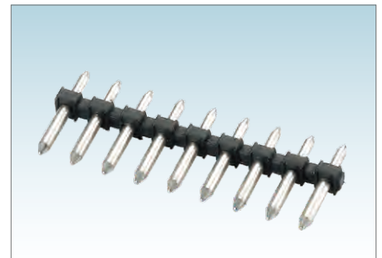

Pitch:3.5mm

WJ333J-3.5

UL/CUL 技术参数 UL/CUL Technical Data				
等级	Use Group	B	C	D
额定电压	Rated Voltage [V]	300	-	300
额定电流	Rated Current [A]	8	-	8
接线范围 Wire Range	单芯线 Solid [AWG]	/		
	多芯线 Stranded [AWG]	/		
耐电压	Dielectric Voltage-Withstand	1.6KV		
IEC 技术参数 IEC Technical Data				
过电压类别	Overvoltage Category	Ⅲ	Ⅲ	Ⅱ
污染等级	Contamination Class	3	2	2
额定电压	Rated Voltage [V]	160	250	250
额定电流	Rated Current [A]	8	8	8
额定冲击电压	Impulse withstand voltage [KV]	2.5	2.5	2.5
导线截面积 Conductor cross section	硬质导线 Solid[mm²]	/		
	柔性导线 Flexible[mm²]	/		
材料 Material				
绝缘材料	Insulation Material	PBT		
阻燃等级	Flame retardant rating	UL94V-0		
导体材料	Conductor Material	Copper alloy		
导体表面镀层	Plating of conductor surface	Sn plated		
一般参数 Other Data				
间距/极数	Pitch/Poles [mm]/[P]	3.5/2~24		
剥线长度	Stripping Length [mm]	/		
螺丝/扭矩	Screw/Torque(Max)[N.m]	/		
工作温度	Operating temperature[℃]	-30~+120		
焊锡温度	Soldering temperature	260℃ /5S		
引针尺寸	Pin dimensions [mm]	∅1.0		
PCB板孔径	PCB Hole Diameter [mm]	∅1.2		

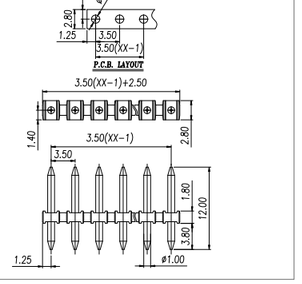

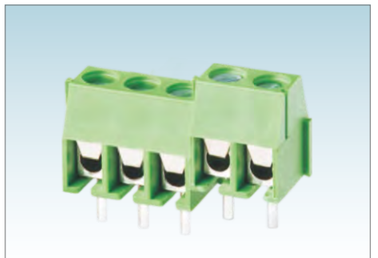

Pitch:3.5/3.96mm

WJ350-3.5/WJ396-3.96

UL/CUL 技术参数 UL/CUL Technical Data				
等级	Use Group	B	C	D
额定电压	Rated Voltage [V]	300	-	-
额定电流	Rated Current [A]	10	-	-
接线范围 Wire Range	单芯线 Solid [AWG]	24~18		
	多芯线 Stranded [AWG]	24~18		
耐电压	Dielectric Voltage-Withstand	1.6KV		
IEC 技术参数 IEC Technical Data				
过电压类别	Overvoltage Category	Ⅲ	Ⅲ	Ⅱ
污染等级	Contamination Class	3	2	2
额定电压	Rated Voltage [V]	160	250	320
额定电流	Rated Current [A]	13.5	13.5	13.5
额定冲击电压	Impulse withstand voltage [KV]	2.5	2.5	2.5
导线截面积 Conductor cross section	硬质导线 Solid[mm²]	0.5~1.0		
	柔性导线 Flexible[mm²]	0.5~1.0		
材料 Material				
绝缘材料	Insulation Material	PA66		
阻燃等级	Flame retardant rating	UL94V-0		
导体材料	Conductor Material	Copper alloy		
导体表面镀层	Plating of conductor surface	Sn plated		
一般参数 Other Data				
间距/极数	Pitch/Poles [mm]/[P]	3.5,3.96/2~24		
剥线长度	Stripping Length [mm]	5~6		
螺丝/扭矩	Screw/Torque(Max)[N.m]	M2/0.2		
工作温度	Operating temperature[℃]	-40~+105		
焊锡温度	Soldering temperature	260℃ /5S		
引针尺寸	Pin dimensions [mm]	∅0.8		
PCB板孔径	PCB Hole Diameter [mm]	∅1.0		

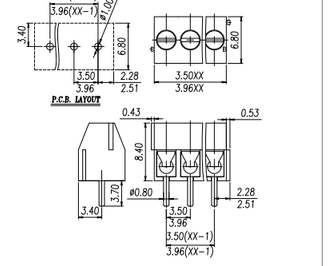

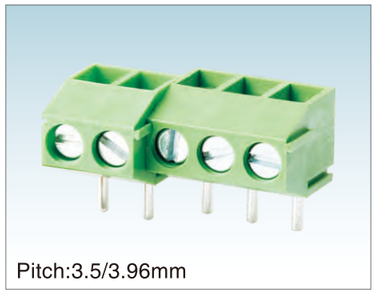

Pitch:3.5/3.96mm

WJ350R-3.5/WJ396R-3.96

UL/CUL 技术参数 UL/CUL Technical Data				
等级	Use Group	B	C	D
额定电压	Rated Voltage [V]	300	-	-
额定电流	Rated Current [A]	10	-	-
接线范围 Wire Range	单芯线 Solid [AWG]	24~18		
	多芯线 Stranded [AWG]	24~18		
耐电压	Dielectric Voltage-Withstand	1.6KV		
IEC 技术参数 IEC Technical Data				
过电压类别	Overvoltage Category	Ⅲ	Ⅲ	Ⅱ
污染等级	Contamination Class	3	2	2
额定电压	Rated Voltage [V]	160	250	320
额定电流	Rated Current [A]	13.5	13.5	13.5
额定冲击电压	Impulse withstand voltage [KV]	2.5	2.5	2.5
导线截面积 Conductor cross section	硬质导线 Solid[mm²]	0.5~1.0		
	柔性导线 Flexible[mm²]	0.5~1.0		
材料 Material				
绝缘材料	Insulation Material	PA66		
阻燃等级	Flame retardant rating	UL94V-0		
导体材料	Conductor Material	Copper alloy		
导体表面镀层	Plating of conductor surface	Sn plated		
一般参数 Other Data				
间距/极数	Pitch/Poles [mm]/[P]	3.5,3.96/2~24		
剥线长度	Stripping Length [mm]	5~6		
螺丝/扭矩	Screw/Torque(Max)[N.m]	M2/0.2		
工作温度	Operating temperature[℃]	-40~+105		
焊锡温度	Soldering temperature	260℃ /5S		
引针尺寸	Pin dimensions [mm]	∅0.8		
PCB板孔径	PCB Hole Diameter [mm]	∅1.0		

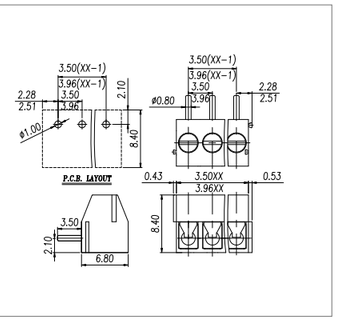



Pitch:5.0mm

WJ126-5.0

UL/CUL 技术参数 UL/CUL Technical Data				
等级	Use Group	B	C	D
额定电压	Rated Voltage [V]	300	-	300
额定电流	Rated Current [A]	8	-	8
接线范围 Wire Range	单芯线 Solid [AWG]	26~14		
	多芯线 Stranded [AWG]	26~14		
耐电压	Dielectric Voltage-Withstand	1.6KV		
IEC 技术参数 IEC Technical Data				
过电压类别	Overvoltage Category	Ⅲ	Ⅲ	Ⅱ
污染等级	Contamination Class	3	2	2
额定电压	Rated Voltage [V]	250	400	630
额定电流	Rated Current [A]	18	18	18
额定冲击电压	Impulse withstand voltage [KV]	4	4	4
导线截面积 Conductor cross section	硬质导线 Solid[mm²]	0.5~2.5		
	柔性导线 Flexible[mm²]	0.5~2.5		
材料 Material				
绝缘材料	Insulation Material	PA66		
阻燃等级	Flame retardant rating	UL94V-0		
导体材料	Conductor Material	Copper alloy		
导体表面镀层	Plating of conductor surface	Sn plated		
一般参数 Other Data				
间距/极数	Pitch/Poles [mm]/[P]	5.0/2~24		
剥线长度	Stripping Length [mm]	6~7		
螺丝/扭矩	Screw/Torque(Max)[N.m]	M2.5/0.25		
工作温度	Operating temperature[℃]	-40~+105		
焊锡温度	Soldering temperature	260℃ /5S		
引针尺寸	Pin dimensions [mm]	0.6*1.0		
PCB板孔径	PCB Hole Diameter [mm]	∅1.4		

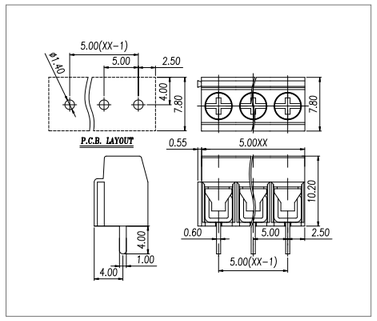



Pitch:5.0mm

WJ126R-5.0

UL/CUL 技术参数 UL/CUL Technical Data				
等级	Use Group	B	C	D
额定电压	Rated Voltage [V]	300	-	300
额定电流	Rated Current [A]	8	-	8
接线范围 Wire Range	单芯线 Solid [AWG]	26~14		
	多芯线 Stranded [AWG]	26~14		
耐电压	Dielectric Voltage-Withstand	1.6KV		
IEC 技术参数 IEC Technical Data				
过电压类别	Overvoltage Category	Ⅲ	Ⅲ	Ⅱ
污染等级	Contamination Class	3	2	2
额定电压	Rated Voltage [V]	250	400	630
额定电流	Rated Current [A]	18	18	18
额定冲击电压	Impulse withstand voltage [KV]	4	4	4
导线截面积 Conductor cross section	硬质导线 Solid[mm²]	0.5~2.5		
	柔性导线 Flexible[mm²]	0.5~2.5		
材料 Material				
绝缘材料	Insulation Material	PA66		
阻燃等级	Flame retardant rating	UL94V-0		
导体材料	Conductor Material	Copper alloy		
导体表面镀层	Plating of conductor surface	Sn plated		
一般参数 Other Data				
间距/极数	Pitch/Poles [mm]/[P]	5.0/2~24		
剥线长度	Stripping Length [mm]	6~7		
螺丝/扭矩	Screw/Torque(Max)[N.m]	M2.5/0.25		
工作温度	Operating temperature[℃]	-40~+105		
焊锡温度	Soldering temperature	260℃ /5S		
引针尺寸	Pin dimensions [mm]	0.6*1.0		
PCB板孔径	PCB Hole Diameter [mm]	∅1.4		

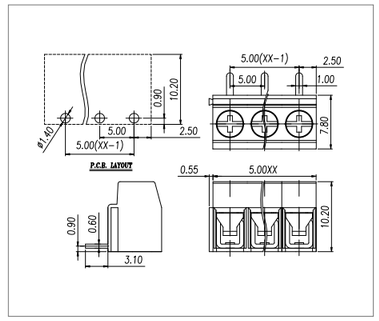

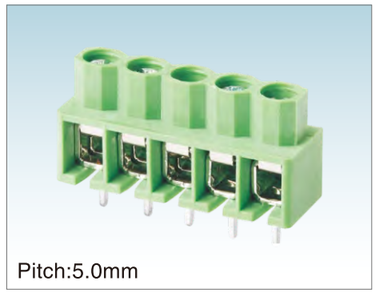

Pitch:5.0mm

WJ166-5.0

UL/CUL 技术参数 UL/CUL Technical Data				
等级	Use Group	B	C	D
额定电压	Rated Voltage [V]	300	-	300
额定电流	Rated Current [A]	15	-	10
接线范围 Wire Range	单芯线 Solid [AWG]	26~14		
	多芯线 Stranded [AWG]	26~14		
耐电压	Dielectric Voltage-Withstand	1.6KV		
IEC 技术参数 IEC Technical Data				
过电压类别	Overvoltage Category	Ⅲ	Ⅲ	Ⅱ
污染等级	Contamination Class	3	2	2
额定电压	Rated Voltage [V]	250	400	630
额定电流	Rated Current [A]	24	24	24
额定冲击电压	Impulse withstand voltage [KV]	4	4	4
导线截面积 Conductor cross section	硬质导线 Solid[mm²]	0.5~2.5		
	柔性导线 Flexible[mm²]	0.5~2.5		
材料 Material				
绝缘材料	Insulation Material	PA66		
阻燃等级	Flame retardant rating	UL94V-0		
导体材料	Conductor Material	Copper alloy		
导体表面镀层	Plating of conductor surface	Sn plated		
一般参数 Other Data				
间距/极数	Pitch/Poles [mm]/[P]	5.0/2~24		
剥线长度	Stripping Length [mm]	5~6		
螺丝/扭矩	Screw/Torque(Max)[N.m]	M3/0.5		
工作温度	Operating temperature[℃]	-40~+105		
焊锡温度	Soldering temperature	260℃ /5S		
引针尺寸	Pin dimensions [mm]	0.7*1.0		
PCB板孔径	PCB Hole Diameter [mm]	∅1.5		

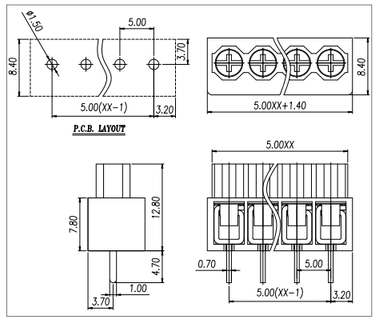

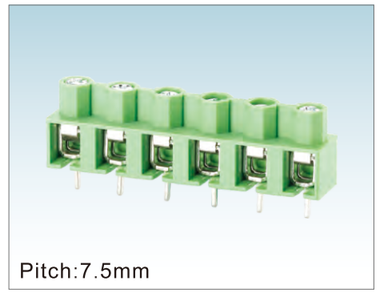

Pitch:7.5mm

WJ166-7.5

UL/CUL 技术参数 UL/CUL Technical Data				
等级	Use Group	B	C	D
额定电压	Rated Voltage [V]	300	-	300
额定电流	Rated Current [A]	15	-	10
接线范围 Wire Range	单芯线 Solid [AWG]	26~14		
	多芯线 Stranded [AWG]	26~14		
耐电压	Dielectric Voltage-Withstand	1.6KV		
IEC 技术参数 IEC Technical Data				
过电压类别	Overvoltage Category	Ⅲ	Ⅲ	Ⅱ
污染等级	Contamination Class	3	2	2
额定电压	Rated Voltage [V]	450	630	1000
额定电流	Rated Current [A]	24	24	24
额定冲击电压	Impulse withstand voltage [KV]	6	6	6
导线截面积 Conductor cross section	硬质导线 Solid[mm²]	0.5~2.5		
	柔性导线 Flexible[mm²]	0.5~2.5		
材料 Material				
绝缘材料	Insulation Material	PA66		
阻燃等级	Flame retardant rating	UL94V-0		
导体材料	Conductor Material	Copper alloy		
导体表面镀层	Plating of conductor surface	Sn plated		
一般参数 Other Data				
间距/极数	Pitch/Poles [mm]/[P]	7.5/2~18		
剥线长度	Stripping Length [mm]	5~6		
螺丝/扭矩	Screw/Torque(Max)[N.m]	M3/0.5		
工作温度	Operating temperature[℃]	-40~+105		
焊锡温度	Soldering temperature	260℃ /5S		
引针尺寸	Pin dimensions [mm]	0.7*1.0		
PCB板孔径	PCB Hole Diameter [mm]	∅1.5		

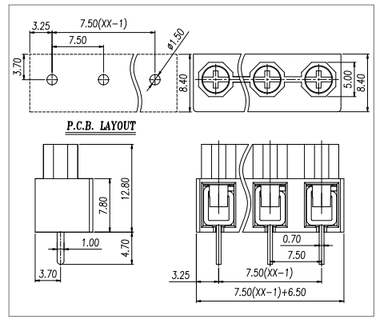

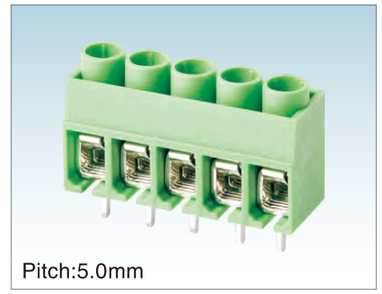

Pitch:5.0mm

WJ167-5.0

UL/CUL 技术参数 UL/CUL Technical Data				
等级	Use Group	B	C	D
额定电压	Rated Voltage [V]	300	-	300
额定电流	Rated Current [A]	15	-	10
接线范围 Wire Range	单芯线 Solid [AWG]	26~12		
	多芯线 Stranded [AWG]	26~12		
耐电压	Dielectric Voltage-Withstand	1.6KV		
IEC 技术参数 IEC Technical Data				
过电压类别	Overvoltage Category	Ⅲ	Ⅲ	Ⅱ
污染等级	Contamination Class	3	2	2
额定电压	Rated Voltage [V]	250	400	630
额定电流	Rated Current [A]	22	22	22
额定冲击电压	Impulse withstand voltage [KV]	4	4	4
导线截面积 Conductor cross section	硬质导线 Solid[mm²]	0.5~2.5		
	柔性导线 Flexible[mm²]	0.5~2.5		
材料 Material				
绝缘材料	Insulation Material	PA66		
阻燃等级	Flame retardant rating	UL94V-0		
导体材料	Conductor Material	Copper alloy		
导体表面镀层	Plating of conductor surface	Sn plated		
一般参数 Other Data				
间距/极数	Pitch/Poles [mm]/[P]	5.0/2~24		
剥线长度	Stripping Length [mm]	6~7		
螺丝/扭矩	Screw/Torque(Max)[N.m]	M2.5/0.4		
工作温度	Operating temperature[℃]	-40~+105		
焊锡温度	Soldering temperature	260℃ /5S		
引针尺寸	Pin dimensions [mm]	0.7*1.0		
PCB板孔径	PCB Hole Diameter [mm]	∅1.5		

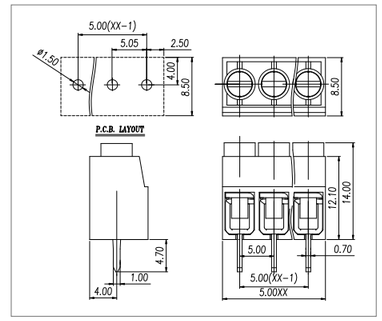

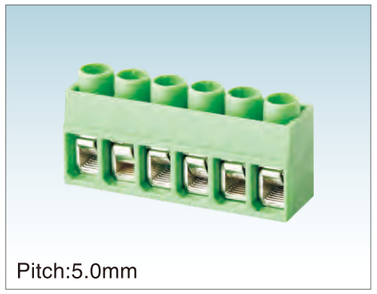

Pitch:5.0mm

WJ167R-5.0

UL/CUL 技术参数 UL/CUL Technical Data				
等级	Use Group	B	C	D
额定电压	Rated Voltage [V]	300	-	300
额定电流	Rated Current [A]	15	-	10
接线范围 Wire Range	单芯线 Solid [AWG]	26~12		
	多芯线 Stranded [AWG]	26~12		
耐电压	Dielectric Voltage-Withstand	1.6KV		
IEC 技术参数 IEC Technical Data				
过电压类别	Overvoltage Category	Ⅲ	Ⅲ	Ⅱ
污染等级	Contamination Class	3	2	2
额定电压	Rated Voltage [V]	250	400	630
额定电流	Rated Current [A]	22	22	22
额定冲击电压	Impulse withstand voltage [KV]	4	4	4
导线截面积 Conductor cross section	硬质导线 Solid[mm²]	0.5~2.5		
	柔性导线 Flexible[mm²]	0.5~2.5		
材料 Material				
绝缘材料	Insulation Material	PA66		
阻燃等级	Flame retardant rating	UL94V-0		
导体材料	Conductor Material	Copper alloy		
导体表面镀层	Plating of conductor surface	Sn plated		
一般参数 Other Data				
间距/极数	Pitch/Poles [mm]/[P]	5.0/2~24		
剥线长度	Stripping Length [mm]	6~7		
螺丝/扭矩	Screw/Torque(Max)[N.m]	M2.5/0.4		
工作温度	Operating temperature[℃]	-40~+105		
焊锡温度	Soldering temperature	260℃ /5S		
引针尺寸	Pin dimensions [mm]	0.7*0.9		
PCB板孔径	PCB Hole Diameter [mm]	∅1.4		

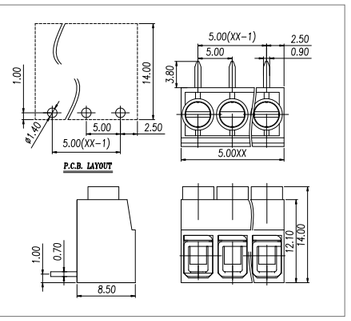

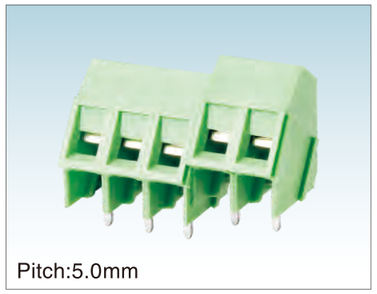

Pitch:5.0mm

WJ103-5.0

UL/CUL 技术参数 UL/CUL Technical Data				
等级	Use Group	B	C	D
额定电压	Rated Voltage [V]	300	-	300
额定电流	Rated Current [A]	16	-	10
接线范围 Wire Range	单芯线 Solid [AWG]	24~12		
	多芯线 Stranded [AWG]	24~12		
耐电压	Dielectric Voltage-Withstand	1.6KV		
IEC 技术参数 IEC Technical Data				
过电压类别	Overvoltage Category	Ⅲ	Ⅲ	Ⅱ
污染等级	Contamination Class	3	2	2
额定电压	Rated Voltage [V]	250	400	630
额定电流	Rated Current [A]	24	24	24
额定冲击电压	Impulse withstand voltage [KV]	4	4	4
导线截面积 Conductor cross section	硬质导线 Solid[mm²]	0.5~2.5		
	柔性导线 Flexible[mm²]	0.5~2.5		
材料 Material				
绝缘材料	Insulation Material	PA66		
阻燃等级	Flame retardant rating	UL94V-0		
导体材料	Conductor Material	Copper alloy		
导体表面镀层	Plating of conductor surface	Sn plated		
一般参数 Other Data				
间距/极数	Pitch/Poles [mm]/[P]	5.0/2~24		
剥线长度	Stripping Length [mm]	6~7		
螺丝/扭矩	Screw/Torque(Max)[N.m]	M2.5/0.4		
工作温度	Operating temperature[℃]	-40~+105		
焊锡温度	Soldering temperature	260℃ /5S		
引针尺寸	Pin dimensions [mm]	0.8*0.9		
PCB板孔径	PCB Hole Diameter [mm]	∅1.5		

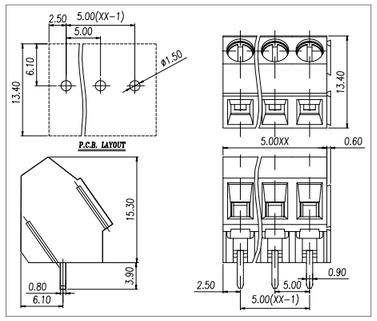



Pitch:5.0mm

WJ122-5.0

UL/CUL 技术参数 UL/CUL Technical Data				
等级	Use Group	B	C	D
额定电压	Rated Voltage [V]	300	-	300
额定电流	Rated Current [A]	10	-	10
接线范围 Wire Range	单芯线 Solid [AWG]	22~14		
	多芯线 Stranded [AWG]	22~14		
耐电压	Dielectric Voltage-Withstand	1.6KV		
IEC 技术参数 IEC Technical Data				
过电压类别	Overvoltage Category	Ⅲ	Ⅲ	Ⅱ
污染等级	Contamination Class	3	2	2
额定电压	Rated Voltage [V]	250	400	630
额定电流	Rated Current [A]	24	24	24
额定冲击电压	Impulse withstand voltage [KV]	4	4	4
导线截面积 Conductor cross section	硬质导线 Solid[mm²]	0.5~2.5		
	柔性导线 Flexible[mm²]	0.5~2.5		
材料 Material				
绝缘材料	Insulation Material	PA66		
阻燃等级	Flame retardant rating	UL94V-0		
导体材料	Conductor Material	Copper alloy		
导体表面镀层	Plating of conductor surface	Sn plated		
一般参数 Other Data				
间距/极数	Pitch/Poles [mm]/[P]	5.0/2~24		
剥线长度	Stripping Length [mm]	6~7		
螺丝/扭矩	Screw/Torque(Max)[N.m]	M3/0.5		
工作温度	Operating temperature[℃]	-40~+105		
焊锡温度	Soldering temperature	260℃ /5S		
引针尺寸	Pin dimensions [mm]	0.8*1.0		
PCB板孔径	PCB Hole Diameter [mm]	∅1.6		

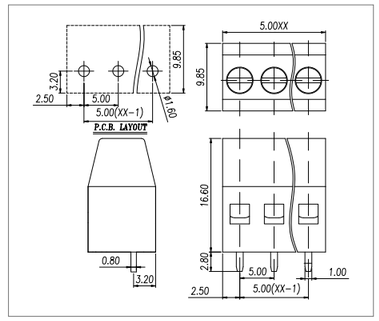

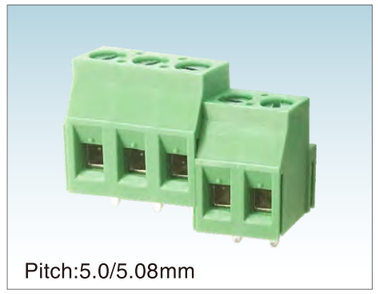

Pitch:5.0/5.08mm

WJ123-5.0/5.08

UL/CUL 技术参数 UL/CUL Technical Data				
等级	Use Group	B	C	D
额定电压	Rated Voltage [V]	300	-	300
额定电流	Rated Current [A]	20	-	10
接线范围 Wire Range	单芯线 Solid [AWG]	30~12		
	多芯线 Stranded [AWG]	30~12		
耐电压	Dielectric Voltage-Withstand	1.6KV		
IEC 技术参数 IEC Technical Data				
过电压类别	Overvoltage Category	Ⅲ	Ⅲ	Ⅱ
污染等级	Contamination Class	3	2	2
额定电压	Rated Voltage [V]	250	400	630
额定电流	Rated Current [A]	24	24	24
额定冲击电压	Impulse withstand voltage [KV]	4	4	4
导线截面积 Conductor cross section	硬质导线 Solid[mm²]	0.2~2.5		
	柔性导线 Flexible[mm²]	0.2~2.5		
材料 Material				
绝缘材料	Insulation Material	PA66		
阻燃等级	Flame retardant rating	UL94V-0		
导体材料	Conductor Material	Copper alloy		
导体表面镀层	Plating of conductor surface	Sn plated		
一般参数 Other Data				
间距/极数	Pitch/Poles [mm]/[P]	5.0,5.08/2~24		
剥线长度	Stripping Length [mm]	6~7		
螺丝/扭矩	Screw/Torque(Max)[N.m]	M3/0.5		
工作温度	Operating temperature[℃]	-40~+105		
焊锡温度	Soldering temperature	260℃ /5S		
引针尺寸	Pin dimensions [mm]	0.8*1.0		
PCB板孔径	PCB Hole Diameter [mm]	∅1.5		

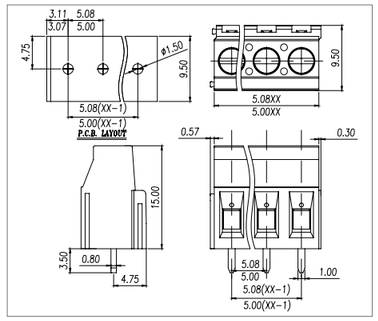

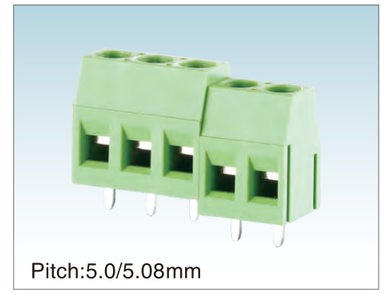

Pitch:5.0/5.08mm

WJ125-5.0/5.08

UL/CUL 技术参数 UL/CUL Technical Data				
等级	Use Group	B	C	D
额定电压	Rated Voltage [V]	300	-	300
额定电流	Rated Current [A]	16	-	10
接线范围 Wire Range	单芯线 Solid [AWG]	22~12		
	多芯线 Stranded [AWG]	22~12		
耐电压	Dielectric Voltage-Withstand	1.6KV		
IEC 技术参数 IEC Technical Data				
过电压类别	Overvoltage Category	Ⅲ	Ⅲ	Ⅱ
污染等级	Contamination Class	3	2	2
额定电压	Rated Voltage [V]	250	400	630
额定电流	Rated Current [A]	18	18	18
额定冲击电压	Impulse withstand voltage [KV]	4	4	4
导线截面积 Conductor cross section	硬质导线 Solid[mm²]	0.2~2.5		
	柔性导线 Flexible[mm²]	0.2~2.5		
材料 Material				
绝缘材料	Insulation Material	PA66		
阻燃等级	Flame retardant rating	UL94V-0		
导体材料	Conductor Material	Copper alloy		
导体表面镀层	Plating of conductor surface	Sn plated		
一般参数 Other Data				
间距/极数	Pitch/Poles [mm]/[P]	5.0,5.08/2~24		
剥线长度	Stripping Length [mm]	6~7		
螺丝/扭矩	Screw/Torque(Max)[N.m]	M2.5/0.4		
工作温度	Operating temperature[℃]	-40~+105		
焊锡温度	Soldering temperature	260℃ /5S		
引针尺寸	Pin dimensions [mm]	0.8*1.0		
PCB板孔径	PCB Hole Diameter [mm]	∅1.5		

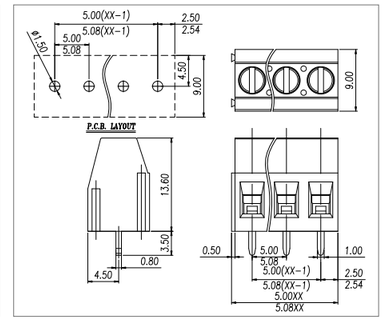



Pitch:5.0/5.08mm

WJ125R-5.0/5.08

UL/CUL 技术参数 UL/CUL Technical Data				
等级	Use Group	B	C	D
额定电压	Rated Voltage [V]	300	-	300
额定电流	Rated Current [A]	16	-	10
接线范围 Wire Range	单芯线 Solid [AWG]	22~12		
	多芯线 Stranded [AWG]	22~12		
耐电压	Dielectric Voltage-Withstand	1.6KV		
IEC 技术参数 IEC Technical Data				
过电压类别	Overvoltage Category	Ⅲ	Ⅲ	Ⅱ
污染等级	Contamination Class	3	2	2
额定电压	Rated Voltage [V]	250	400	630
额定电流	Rated Current [A]	18	18	18
额定冲击电压	Impulse withstand voltage [KV]	4	4	4
导线截面积 Conductor cross section	硬质导线 Solid[mm²]	0.2~2.5		
	柔性导线 Flexible[mm²]	0.2~2.5		
材料 Material				
绝缘材料	Insulation Material	PA66		
阻燃等级	Flame retardant rating	UL94V-0		
导体材料	Conductor Material	Copper alloy		
导体表面镀层	Plating of conductor surface	Sn plated		
一般参数 Other Data				
间距/极数	Pitch/Poles [mm]/[P]	5.0,5.08/2~24		
剥线长度	Stripping Length [mm]	6~7		
螺丝/扭矩	Screw/Torque(Max)[N.m]	M2.5/0.4		
工作温度	Operating temperature[℃]	-40~+105		
焊锡温度	Soldering temperature	260℃ /5S		
引针尺寸	Pin dimensions [mm]	0.8*1.0		
PCB板孔径	PCB Hole Diameter [mm]	∅1.5		

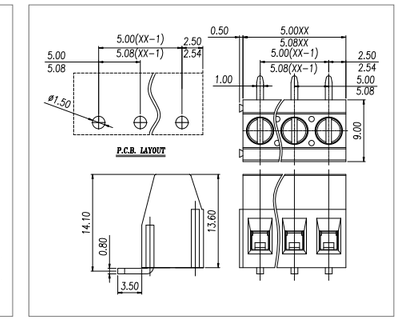

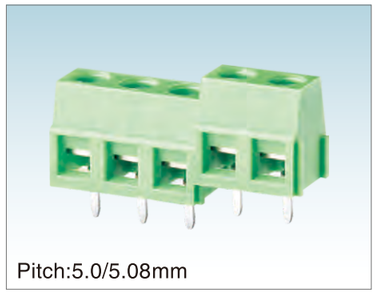

Pitch:5.0/5.08mm

WJ127-5.0/5.08

UL/CUL 技术参数 UL/CUL Technical Data				
等级	Use Group	B	C	D
额定电压	Rated Voltage [V]	300	-	300
额定电流	Rated Current [A]	12	-	10
接线范围 Wire Range	单芯线 Solid [AWG]	26~14		
	多芯线 Stranded [AWG]	26~14		
耐电压	Dielectric Voltage-Withstand	1.6KV		

IEC 技术参数 IEC Technical Data				
过电压类别	Overvoltage Category	Ⅲ	Ⅲ	Ⅱ
污染等级	Contamination Class	3	2	2
额定电压	Rated Voltage [V]	250	400	630
额定电流	Rated Current [A]	17.5	17.5	17.5
额定冲击电压	Impulse withstand voltage [KV]	4	4	4
导线截面积 Conductor cross section	硬质导线 Solid[mm²]	0.5~1.5		
	柔性导线 Flexible[mm²]	0.5~1.5		

材料 Material		
绝缘材料	Insulation Material	PA66
阻燃等级	Flame retardant rating	UL94V-0
导体材料	Conductor Material	Copper alloy
导体表面镀层	Plating of conductor surface	Sn plated

一般参数 Other Data		
间距/极数	Pitch/Poles [mm]/[P]	5.0,5.08/2~24
剥线长度	Stripping Length [mm]	5~6
螺丝/扭矩	Screw/Torque(Max)[N.m]	M2.5/0.4
工作温度	Operating temperature[℃]	-40~+105
焊锡温度	Soldering temperature	260℃ /5S
引针尺寸	Pin dimensions [mm]	0.6*0.9
PCB板孔径	PCB Hole Diameter [mm]	∅1.3

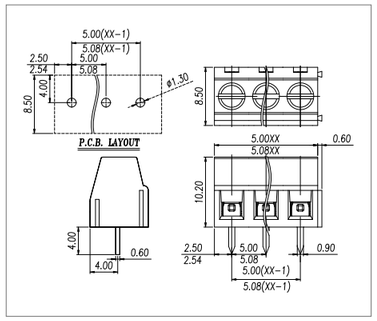



Pitch:5.0/5.08mm

WJ127R-5.0/5.08

UL/CUL 技术参数 UL/CUL Technical Data				
等级	Use Group	B	C	D
额定电压	Rated Voltage [V]	300	-	300
额定电流	Rated Current [A]	12	-	10
接线范围 Wire Range	单芯线 Solid [AWG]	26~14		
	多芯线 Stranded [AWG]	26~14		
耐电压	Dielectric Voltage-Withstand	1.6KV		

IEC 技术参数 IEC Technical Data				
过电压类别	Overvoltage Category	Ⅲ	Ⅲ	Ⅱ
污染等级	Contamination Class	3	2	2
额定电压	Rated Voltage [V]	250	400	630
额定电流	Rated Current [A]	17.5	17.5	17.5
额定冲击电压	Impulse withstand voltage [KV]	4	4	4
导线截面积 Conductor cross section	硬质导线 Solid[mm²]	0.5~1.5		
	柔性导线 Flexible[mm²]	0.5~1.5		

材料 Material		
绝缘材料	Insulation Material	PA66
阻燃等级	Flame retardant rating	UL94V-0
导体材料	Conductor Material	Copper alloy
导体表面镀层	Plating of conductor surface	Sn plated

一般参数 Other Data		
间距/极数	Pitch/Poles [mm]/[P]	5.0,5.08/2~24
剥线长度	Stripping Length [mm]	5~6
螺丝/扭矩	Screw/Torque(Max)[N.m]	M2.5/0.4
工作温度	Operating temperature[℃]	-40~+105
焊锡温度	Soldering temperature	260℃ /5S
引针尺寸	Pin dimensions [mm]	0.6*0.9
PCB板孔径	PCB Hole Diameter [mm]	∅1.3

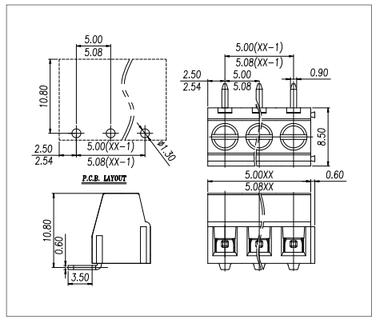



Pitch:5.08mm

WJ127L-5.08

UL/CUL 技术参数 UL/CUL Technical Data				
等级	Use Group	B	C	D
额定电压	Rated Voltage [V]	300	-	300
额定电流	Rated Current [A]	12	-	10
接线范围 Wire Range	单芯线 Solid [AWG]	26~14		
	多芯线 Stranded [AWG]	26~14		
耐电压	Dielectric Voltage-Withstand	1.6KV		

IEC 技术参数 IEC Technical Data				
过电压类别	Overvoltage Category	Ⅲ	Ⅲ	Ⅱ
污染等级	Contamination Class	3	2	2
额定电压	Rated Voltage [V]	250	400	630
额定电流	Rated Current [A]	17.5	17.5	17.5
额定冲击电压	Impulse withstand voltage [KV]	4	4	4
导线截面积 Conductor cross section	硬质导线 Solid[mm²]	0.5~1.5		
	柔性导线 Flexible[mm²]	0.5~1.5		

材料 Material		
绝缘材料	Insulation Material	PA66
阻燃等级	Flame retardant rating	UL94V-0
导体材料	Conductor Material	Copper alloy
导体表面镀层	Plating of conductor surface	Sn plated

一般参数 Other Data		
间距/极数	Pitch/Poles [mm]/[P]	5.08/2~24
剥线长度	Stripping Length [mm]	5~6
螺丝/扭矩	Screw/Torque(Max)[N.m]	M2.5/0.4
工作温度	Operating temperature[℃]	-40~+105
焊锡温度	Soldering temperature	260℃ /5S
引针尺寸	Pin dimensions [mm]	0.5*1.0
PCB板孔径	PCB Hole Diameter [mm]	∅1.3

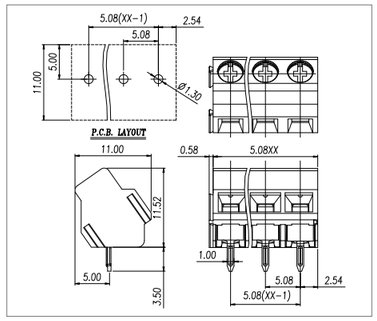

ISO14001 ISO45001 ISO9001 ISO80079-34 ISO/TS 22163

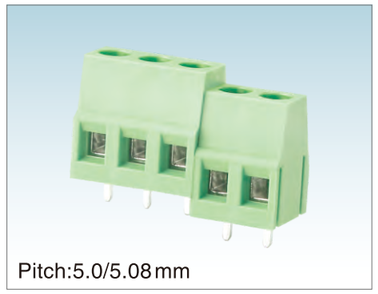

Pitch:5.0/5.08mm

WJ128-5.0/5.08

UL/CUL 技术参数 UL/CUL Technical Data				
等级	Use Group	B	C	D
额定电压	Rated Voltage [V]	300	-	300
额定电流	Rated Current [A]	16	-	10
接线范围 Wire Range	单芯线 Solid [AWG]	22~12		
	多芯线 Stranded [AWG]	22~12		
耐电压	Dielectric Voltage-Withstand	1.6KV		

IEC 技术参数 IEC Technical Data				
过电压类别	Overvoltage Category	Ⅲ	Ⅲ	Ⅱ
污染等级	Contamination Class	3	2	2
额定电压	Rated Voltage [V]	250	400	630
额定电流	Rated Current [A]	24	24	24
额定冲击电压	Impulse withstand voltage [KV]	4	4	4
导线截面积 Conductor cross section	硬质导线 Solid[mm²]	0.5~2.5		
	柔性导线 Flexible[mm²]	0.5~2.5		

材料 Material		
绝缘材料	Insulation Material	PA66
阻燃等级	Flame retardant rating	UL94V-0
导体材料	Conductor Material	Copper alloy
导体表面镀层	Plating of conductor surface	Sn plated

一般参数 Other Data		
间距/极数	Pitch/Poles [mm]/[P]	5.0,5.08/2~24
剥线长度	Stripping Length [mm]	6~7
螺丝/扭矩	Screw/Torque(Max)[N.m]	M2.5/0.4
工作温度	Operating temperature[℃]	-40~+105
焊锡温度	Soldering temperature	260℃ /5S
引针尺寸	Pin dimensions [mm]	0.8*0.9
PCB板孔径	PCB Hole Diameter [mm]	∅1.5

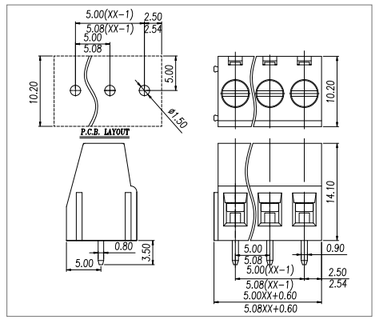

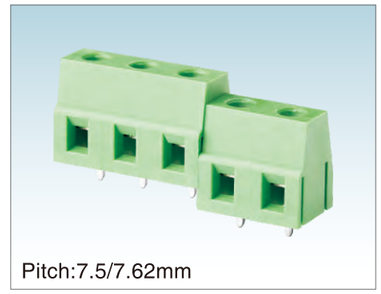

Pitch:7.5/7.62mm

WJ128-7.5/7.62

UL/CUL 技术参数 UL/CUL Technical Data				
等级	Use Group	B	C	D
额定电压	Rated Voltage [V]	300	-	300
额定电流	Rated Current [A]	16	-	10
接线范围 Wire Range	单芯线 Solid [AWG]	22~12		
	多芯线 Stranded [AWG]	22~12		
耐电压	Dielectric Voltage-Withstand	1.6KV		

IEC 技术参数 IEC Technical Data				
过电压类别	Overvoltage Category	Ⅲ	Ⅲ	Ⅱ
污染等级	Contamination Class	3	2	2
额定电压	Rated Voltage [V]	450	630	1000
额定电流	Rated Current [A]	20	20	20
额定冲击电压	Impulse withstand voltage [KV]	6	6	6
导线截面积 Conductor cross section	硬质导线 Solid[mm²]	0.5~2.5		
	柔性导线 Flexible[mm²]	0.5~2.5		

材料 Material		
绝缘材料	Insulation Material	PA66
阻燃等级	Flame retardant rating	UL94V-0
导体材料	Conductor Material	Copper alloy
导体表面镀层	Plating of conductor surface	Sn plated

一般参数 Other Data		
间距/极数	Pitch/Poles [mm]/[P]	7.5,7.62/2~24
剥线长度	Stripping Length [mm]	6~7
螺丝/扭矩	Screw/Torque(Max)[N.m]	M2.5/0.4
工作温度	Operating temperature[℃]	-40~+105
焊锡温度	Soldering temperature	260℃ /5S
引针尺寸	Pin dimensions [mm]	0.8*0.9
PCB板孔径	PCB Hole Diameter [mm]	∅1.5

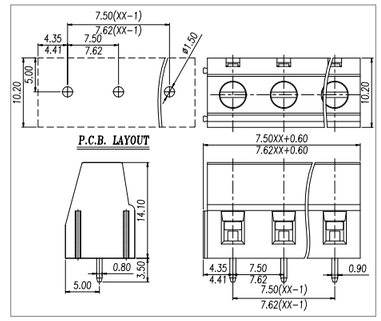

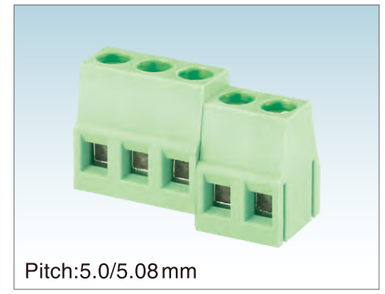

Pitch:5.0/5.08mm

WJ128R-5.0/5.08

UL/CUL 技术参数 UL/CUL Technical Data				
等级	Use Group	B	C	D
额定电压	Rated Voltage [V]	300	-	300
额定电流	Rated Current [A]	16		10
接线范围 Wire Range	单芯线 Solid [AWG]	22~12		
	多芯线 Stranded [AWG]	22~12		
耐电压	Dielectric Voltage-Withstand	1.6KV		

IEC 技术参数 IEC Technical Data				
过电压类别	Overvoltage Category	Ⅲ	Ⅲ	Ⅱ
污染等级	Contamination Class	3	2	2
额定电压	Rated Voltage [V]	250	400	630
额定电流	Rated Current [A]	20	20	20
额定冲击电压	Impulse withstand voltage [KV]	4	4	4
导线截面积 Conductor cross section	硬质导线 Solid[mm²]	0.5~2.5		
	柔性导线 Flexible[mm²]	0.5~2.5		

材料 Material		
绝缘材料	Insulation Material	PA66
阻燃等级	Flame retardant rating	UL94V-0
导体材料	Conductor Material	Copper alloy
导体表面镀层	Plating of conductor surface	Sn plated

一般参数 Other Data		
间距/极数	Pitch/Poles [mm]/[P]	5.0,5.08/2~24
剥线长度	Stripping Length [mm]	6~7
螺丝/扭矩	Screw/Torque(Max)[N.m]	M2.5/0.4
工作温度	Operating temperature[℃]	-40~+105
焊锡温度	Soldering temperature	260℃ /5S
引针尺寸	Pin dimensions [mm]	0.8*0.9
PCB板孔径	PCB Hole Diameter [mm]	∅1.5

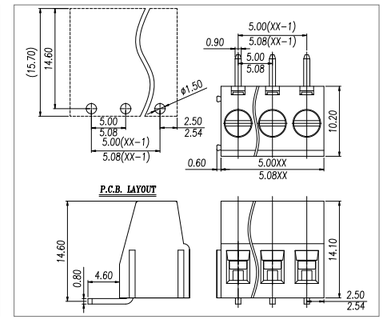

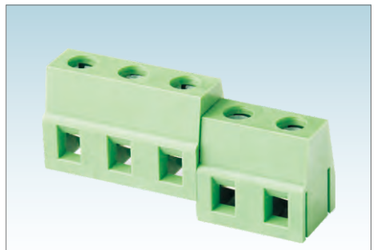

Pitch:7.5/7.62mm

WJ128R-7.5/7.62

UL/CUL 技术参数 UL/CUL Technical Data				
等级	Use Group	B	C	D
额定电压	Rated Voltage [V]	300	-	300
额定电流	Rated Current [A]	16	-	10
接线范围 Wire Range	单芯线 Solid [AWG]	22~12		
	多芯线 Stranded [AWG]	22~12		
耐电压	Dielectric Voltage-Withstand	1.6KV		
IEC 技术参数 IEC Technical Data				
过电压类别	Overvoltage Category	Ⅲ	Ⅲ	Ⅱ
污染等级	Contamination Class	3	2	2
额定电压	Rated Voltage [V]	450	630	1000
额定电流	Rated Current [A]	20	20	20
额定冲击电压	Impulse withstand voltage [KV]	6	6	6
导线截面积 Conductor cross section	硬质导线 Solid[mm²]	0.5~2.5		
	柔性导线 Flexible[mm²]	0.5~2.5		
材料 Material				
绝缘材料	Insulation Material	PA66		
阻燃等级	Flame retardant rating	UL94V-0		
导体材料	Conductor Material	Copper alloy		
导体表面镀层	Plating of conductor surface	Sn plated		
一般参数 Other Data				
间距/极数	Pitch/Poles [mm]/[P]	7.5,7.62/2~24		
剥线长度	Stripping Length [mm]	6~7		
螺丝/扭矩	Screw/Torque(Max)[N.m]	M2.5/0.4		
工作温度	Operating temperature[℃]	-40~+105		
焊锡温度	Soldering temperature	260℃ /5S		
引针尺寸	Pin dimensions [mm]	0.8*0.9		
PCB板孔径	PCB Hole Diameter [mm]	∅1.5		

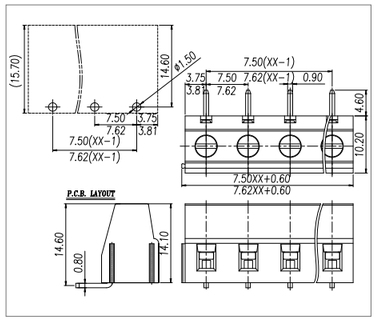



Pitch:5.0mm

WJ128E-5.0

UL/CUL 技术参数 UL/CUL Technical Data				
等级	Use Group	B	C	D
额定电压	Rated Voltage [V]	300	-	300
额定电流	Rated Current [A]	16	-	10
接线范围 Wire Range	单芯线 Solid [AWG]	22~12		
	多芯线 Stranded [AWG]	22~12		
耐电压	Dielectric Voltage-Withstand	1.5KV		
IEC 技术参数 IEC Technical Data				
过电压类别	Overvoltage Category	Ⅲ	Ⅲ	Ⅱ
污染等级	Contamination Class	3	2	2
额定电压	Rated Voltage [V]	250	400	630
额定电流	Rated Current [A]	24	24	24
额定冲击电压	Impulse withstand voltage [KV]	4	4	4
导线截面积 Conductor cross section	硬质导线 Solid[mm²]	0.5~2.5		
	柔性导线 Flexible[mm²]	0.5~2.5		
材料 Material				
绝缘材料	Insulation Material	PA66		
阻燃等级	Flame retardant rating	UL94V-0		
导体材料	Conductor Material	Copper alloy		
导体表面镀层	Plating of conductor surface	Sn plated		
一般参数 Other Data				
间距/极数	Pitch/Poles [mm]/[P]	5.0/2~24		
剥线长度	Stripping Length [mm]	6~7		
螺丝/扭矩	Screw/Torque(Max)[N.m]	M2.5/0.4		
工作温度	Operating temperature[℃]	-40~+105		
焊锡温度	Soldering temperature	260℃ /5S		
引针尺寸	Pin dimensions [mm]	0.8*0.9		
PCB板孔径	PCB Hole Diameter [mm]	∅1.5		

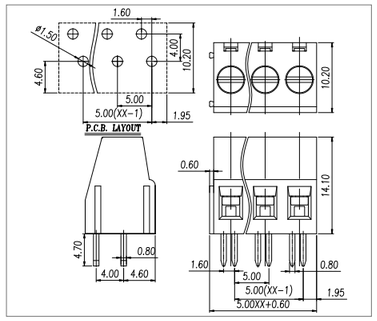

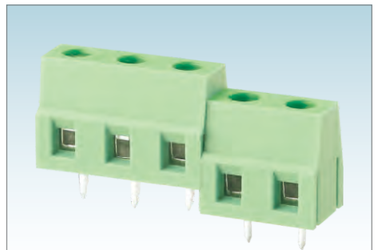

Pitch:7.5mm

WJ128E-7.5

UL/CUL 技术参数 UL/CUL Technical Data				
等级	Use Group	B	C	D
额定电压	Rated Voltage [V]	300	-	300
额定电流	Rated Current [A]	16	-	10
接线范围 Wire Range	单芯线 Solid [AWG]	22~12		
	多芯线 Stranded [AWG]	22~12		
耐电压	Dielectric Voltage-Withstand	1.6KV		
IEC 技术参数 IEC Technical Data				
过电压类别	Overvoltage Category	Ⅲ	Ⅲ	Ⅱ
污染等级	Contamination Class	3	2	2
额定电压	Rated Voltage [V]	450	630	1000
额定电流	Rated Current [A]	24	24	24
额定冲击电压	Impulse withstand voltage [KV]	6	6	6
导线截面积 Conductor cross section	硬质导线 Solid[mm²]	0.5~2.5		
	柔性导线 Flexible[mm²]	0.5~2.5		
材料 Material				
绝缘材料	Insulation Material	PA66		
阻燃等级	Flame retardant rating	UL94V-0		
导体材料	Conductor Material	Copper alloy		
导体表面镀层	Plating of conductor surface	Sn plated		
一般参数 Other Data				
间距/极数	Pitch/Poles [mm]/[P]	7.5/2~24		
剥线长度	Stripping Length [mm]	6~7		
螺丝/扭矩	Screw/Torque(Max)[N.m]	M2.5/0.4		
工作温度	Operating temperature[℃]	-40~+105		
焊锡温度	Soldering temperature	260℃ /5S		
引针尺寸	Pin dimensions [mm]	0.8*0.9		
PCB板孔径	PCB Hole Diameter [mm]	∅1.5		

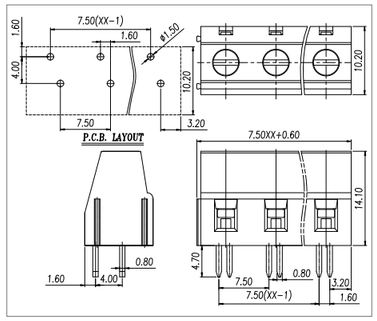



Pitch:5.0/5.08mm

WJ129-5.0/5.08

UL/CUL 技术参数 UL/CUL Technical Data				
等级	Use Group	B	C	D
额定电压	Rated Voltage [V]	300	-	300
额定电流	Rated Current [A]	20	-	10
接线范围 Wire Range	单芯线 Solid [AWG]	26~12		
	多芯线 Stranded [AWG]	26~12		
耐电压	Dielectric Voltage-Withstand	1.6KV		
IEC 技术参数 IEC Technical Data				
过电压类别	Overvoltage Category	Ⅲ	Ⅲ	Ⅱ
污染等级	Contamination Class	3	2	2
额定电压	Rated Voltage [V]	250	400	630
额定电流	Rated Current [A]	24	24	24
额定冲击电压	Impulse withstand voltage [KV]	4	4	4
导线截面积 Conductor cross section	硬质导线 Solid[mm²]	0.5~2.5		
	柔性导线 Flexible[mm²]	0.5~2.5		
材料 Material				
绝缘材料	Insulation Material	PA66		
阻燃等级	Flame retardant rating	UL94V-0		
导体材料	Conductor Material	Copper alloy		
导体表面镀层	Plating of conductor surface	Sn plated		
一般参数 Other Data				
间距/极数	Pitch/Poles [mm]/[P]	5.0, 5.08/2~24		
剥线长度	Stripping Length [mm]	6~7		
螺丝/扭矩	Screw/Torque(Max)[N.m]	M3/0.5		
工作温度	Operating temperature[℃]	-40~+105		
焊锡温度	Soldering temperature	260℃ /5S		
引针尺寸	Pin dimensions [mm]	0.8*1.0		
PCB板孔径	PCB Hole Diameter [mm]	∅1.5		

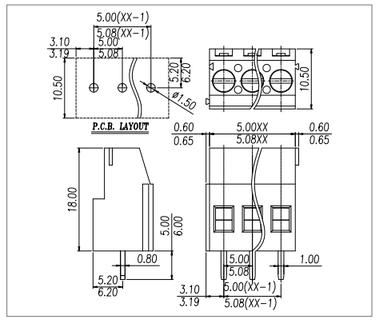

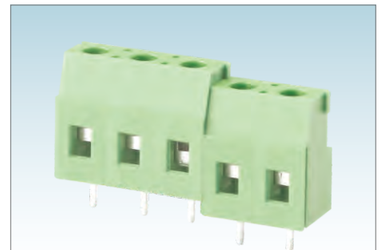

Pitch:7.5/7.62mm

WJ129-7.5/7.62

UL/CUL 技术参数 UL/CUL Technical Data				
等级	Use Group	B	C	D
额定电压	Rated Voltage [V]	300	150	300
额定电流	Rated Current [A]	20	20	10
接线范围 Wire Range	单芯线 Solid [AWG]	26~12		
	多芯线 Stranded [AWG]	26~12		
耐电压	Dielectric Voltage-Withstand	1.6KV		
IEC 技术参数 IEC Technical Data				
过电压类别	Overvoltage Category	Ⅲ	Ⅲ	Ⅱ
污染等级	Contamination Class	3	2	2
额定电压	Rated Voltage [V]	450	630	1000
额定电流	Rated Current [A]	24	24	24
额定冲击电压	Impulse withstand voltage [KV]	6	6	6
导线截面积 Conductor cross section	硬质导线 Solid[mm²]	0.5~2.5		
	柔性导线 Flexible[mm²]	0.5~2.5		
材料 Material				
绝缘材料	Insulation Material	PA66		
阻燃等级	Flame retardant rating	UL94V-0		
导体材料	Conductor Material	Copper alloy		
导体表面镀层	Plating of conductor surface	Sn plated		
一般参数 Other Data				
间距/极数	Pitch/Poles [mm]/[P]	7.5, 7.62/2~24		
剥线长度	Stripping Length [mm]	6~7		
螺丝/扭矩	Screw/Torque(Max)[N.m]	M3/0.5		
工作温度	Operating temperature[℃]	-40~+105		
焊锡温度	Soldering temperature	260℃ /5S		
引针尺寸	Pin dimensions [mm]	0.8*1.0		
PCB板孔径	PCB Hole Diameter [mm]	∅1.5		

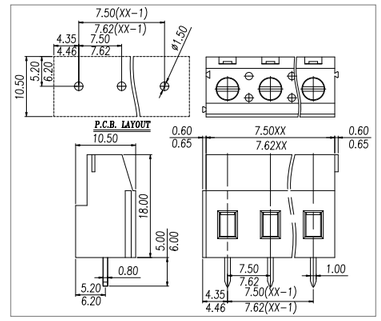



Pitch:5.0/5.08mm

WJ129R-5.0/5.08

UL/CUL 技术参数 UL/CUL Technical Data				
等级	Use Group	B	C	D
额定电压	Rated Voltage [V]	300	-	300
额定电流	Rated Current [A]	20	-	10
接线范围 Wire Range	单芯线 Solid [AWG]	26~12		
	多芯线 Stranded [AWG]	26~12		
耐电压	Dielectric Voltage-Withstand	1.6KV		
IEC 技术参数 IEC Technical Data				
过电压类别	Overvoltage Category	Ⅲ	Ⅲ	Ⅱ
污染等级	Contamination Class	3	2	2
额定电压	Rated Voltage [V]	250	400	630
额定电流	Rated Current [A]	24	24	24
额定冲击电压	Impulse withstand voltage [KV]	4	4	4
导线截面积 Conductor cross section	硬质导线 Solid[mm²]	0.5~2.5		
	柔性导线 Flexible[mm²]	0.5~2.5		
材料 Material				
绝缘材料	Insulation Material	PA66		
阻燃等级	Flame retardant rating	UL94V-0		
导体材料	Conductor Material	Copper alloy		
导体表面镀层	Plating of conductor surface	Sn plated		
一般参数 Other Data				
间距/极数	Pitch/Poles [mm]/[P]	5.0, 5.08/2~24		
剥线长度	Stripping Length [mm]	6~7		
螺丝/扭矩	Screw/Torque(Max)[N.m]	M3/0.5		
工作温度	Operating temperature[℃]	-40~+105		
焊锡温度	Soldering temperature	260℃ /5S		
引针尺寸	Pin dimensions [mm]	0.8*1.0		
PCB板孔径	PCB Hole Diameter [mm]	∅1.5		

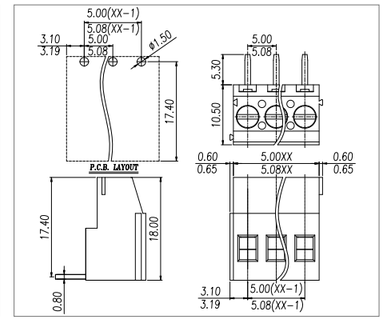



Pitch:7.5/7.62mm

WJ129R-7.5/7.62

UL/CUL 技术参数 UL/CUL Technical Data				
等级	Use Group	B	C	D
额定电压	Rated Voltage [V]	300	150	300
额定电流	Rated Current [A]	20	20	10
接线范围 Wire Range	单芯线 Solid [AWG]	26~12		
	多芯线 Stranded [AWG]	26~12		
耐电压	Dielectric Voltage-Withstand	1.6KV		
IEC 技术参数 IEC Technical Data				
过电压类别	Overvoltage Category	Ⅲ	Ⅲ	Ⅱ
污染等级	Contamination Class	3	2	2
额定电压	Rated Voltage [V]	450	630	1000
额定电流	Rated Current [A]	24	24	24
额定冲击电压	Impulse withstand voltage [KV]	6	6	6
导线截面积 Conductor cross section	硬质导线 Solid[mm²]	0.5~2.5		
	柔性导线 Flexible[mm²]	0.5~2.5		
材料 Material				
绝缘材料	Insulation Material	PA66		
阻燃等级	Flame retardant rating	UL94V-0		
导体材料	Conductor Material	Copper alloy		
导体表面镀层	Plating of conductor surface	Sn plated		
一般参数 Other Data				
间距/极数	Pitch/Poles [mm]/[P]	7.5,7.62/2~24		
剥线长度	Stripping Length [mm]	6~7		
螺丝/扭矩	Screw/Torque(Max)[N.m]	M3/0.5		
工作温度	Operating temperature[℃]	-40~+105		
焊锡温度	Soldering temperature	260℃ /5S		
引针尺寸	Pin dimensions [mm]	0.8*1.0		
PCB板孔径	PCB Hole Diameter [mm]	∅1.5		

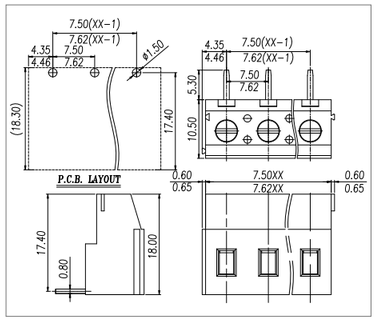



Pitch:5.0/5.08mm

WJ130-5.0/5.08

UL/CUL 技术参数 UL/CUL Technical Data				
等级	Use Group	B	C	D
额定电压	Rated Voltage [V]	300	-	300
额定电流	Rated Current [A]	20	-	10
接线范围 Wire Range	单芯线 Solid [AWG]	26~12		
	多芯线 Stranded [AWG]	26~12		
耐电压	Dielectric Voltage-Withstand	1.6KV		
IEC 技术参数 IEC Technical Data				
过电压类别	Overvoltage Category	Ⅲ	Ⅲ	Ⅱ
污染等级	Contamination Class	3	2	2
额定电压	Rated Voltage [V]	250	400	630
额定电流	Rated Current [A]	24	24	24
额定冲击电压	Impulse withstand voltage [KV]	4	4	4
导线截面积 Conductor cross section	硬质导线 Solid[mm²]	0.5~2.5		
	柔性导线 Flexible[mm²]	0.5~2.5		
材料 Material				
绝缘材料	Insulation Material	PA66		
阻燃等级	Flame retardant rating	UL94V-0		
导体材料	Conductor Material	Copper alloy		
导体表面镀层	Plating of conductor surface	Sn plated		
一般参数 Other Data				
间距/极数	Pitch/Poles [mm]/[P]	5.0,5.08/2~24		
剥线长度	Stripping Length [mm]	6~7		
螺丝/扭矩	Screw/Torque(Max)[N.m]	M3/0.5		
工作温度	Operating temperature[℃]	-40~+105		
焊锡温度	Soldering temperature	260℃ /5S		
引针尺寸	Pin dimensions [mm]	0.8*1.0		
PCB板孔径	PCB Hole Diameter [mm]	∅1.5		

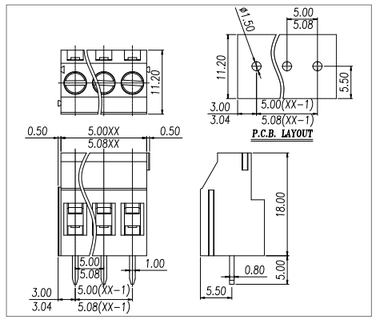



Pitch:7.5/7.62mm

WJ130-7.5/7.62

UL/CUL 技术参数 UL/CUL Technical Data				
等级	Use Group	B	C	D
额定电压	Rated Voltage [V]	300	150	300
额定电流	Rated Current [A]	20	20	10
接线范围 Wire Range	单芯线 Solid [AWG]	26~12		
	多芯线 Stranded [AWG]	26~12		
耐电压	Dielectric Voltage-Withstand	1.6KV		
IEC 技术参数 IEC Technical Data				
过电压类别	Overvoltage Category	Ⅲ	Ⅲ	Ⅱ
污染等级	Contamination Class	3	2	2
额定电压	Rated Voltage [V]	450	630	1000
额定电流	Rated Current [A]	24	24	24
额定冲击电压	Impulse withstand voltage [KV]	6	6	6
导线截面积 Conductor cross section	硬质导线 Solid[mm²]	0.5~2.5		
	柔性导线 Flexible[mm²]	0.5~2.5		
材料 Material				
绝缘材料	Insulation Material	PA66		
阻燃等级	Flame retardant rating	UL94V-0		
导体材料	Conductor Material	Copper alloy		
导体表面镀层	Plating of conductor surface	Sn plated		
一般参数 Other Data				
间距/极数	Pitch/Poles [mm]/[P]	7.5,7.62/2~18		
剥线长度	Stripping Length [mm]	6~7		
螺丝/扭矩	Screw/Torque(Max)[N.m]	M3/0.5		
工作温度	Operating temperature[℃]	-40~+105		
焊锡温度	Soldering temperature	260℃ /5S		
引针尺寸	Pin dimensions [mm]	0.8*1.0		
PCB板孔径	PCB Hole Diameter [mm]	∅1.5		

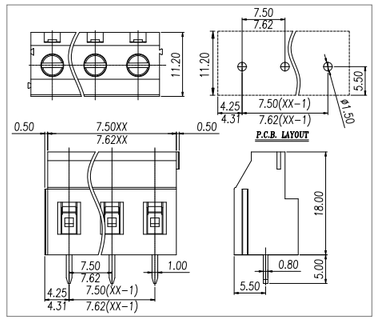



Pitch:5.0/5.08mm

WJ130T2-5.0/5.08

UL/CUL 技术参数 UL/CUL Technical Data				
等级	Use Group	B	C	D
额定电压	Rated Voltage [V]	300	-	300
额定电流	Rated Current [A]	20	-	10
接线范围 Wire Range	单芯线 Solid [AWG]	26~12		
	多芯线 Stranded [AWG]	26~12		
耐电压	Dielectric Voltage-Withstand	1.6KV		
IEC 技术参数 IEC Technical Data				
过电压类别	Overvoltage Category	Ⅲ	Ⅲ	Ⅱ
污染等级	Contamination Class	3	2	2
额定电压	Rated Voltage [V]	250	400	630
额定电流	Rated Current [A]	20	20	20
额定冲击电压	Impulse withstand voltage [KV]	4	4	4
导线截面积 Conductor cross section	硬质导线 Solid[mm²]	0.5~2.5		
	柔性导线 Flexible[mm²]	0.5~2.5		
材料 Material				
绝缘材料	Insulation Material	PA66		
阻燃等级	Flame retardant rating	UL94V-0		
导体材料	Conductor Material	Copper alloy		
导体表面镀层	Plating of conductor surface	Sn plated		
一般参数 Other Data				
间距/极数	Pitch/Poles [mm]/[P]	5.0,5.08/2*2~2*24		
剥线长度	Stripping Length [mm]	6~7		
螺丝/扭矩	Screw/Torque(Max)[N.m]	M3/0.5		
工作温度	Operating temperature[℃]	-40~+105		
焊锡温度	Soldering temperature	260℃ /5S		
引针尺寸	Pin dimensions [mm]	0.8*1.0		
PCB板孔径	PCB Hole Diameter [mm]	∅1.5		

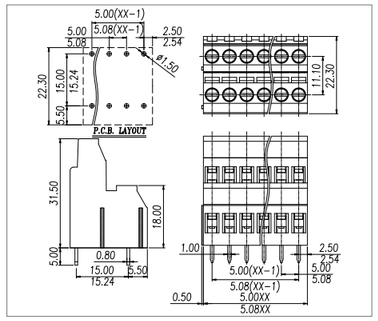



Pitch:5.0/5.08mm

WJ130T2A-5.0/5.08

UL/CUL 技术参数 UL/CUL Technical Data				
等级	Use Group	B	C	D
额定电压	Rated Voltage [V]	300	-	300
额定电流	Rated Current [A]	20	-	10
接线范围 Wire Range	单芯线 Solid [AWG]	26~12		
	多芯线 Stranded [AWG]	26~12		
耐电压	Dielectric Voltage-Withstand	1.6KV		
IEC 技术参数 IEC Technical Data				
过电压类别	Overvoltage Category	Ⅲ	Ⅲ	Ⅱ
污染等级	Contamination Class	3	2	2
额定电压	Rated Voltage [V]	250	400	630
额定电流	Rated Current [A]	20	20	20
额定冲击电压	Impulse withstand voltage [KV]	4	4	4
导线截面积 Conductor cross section	硬质导线 Solid[mm²]	0.5~2.5		
	柔性导线 Flexible[mm²]	0.5~2.5		
材料 Material				
绝缘材料	Insulation Material	PA66		
阻燃等级	Flame retardant rating	UL94V-0		
导体材料	Conductor Material	Copper alloy		
导体表面镀层	Plating of conductor surface	Sn plated		
一般参数 Other Data				
间距/极数	Pitch/Poles [mm]/[P]	5.0,5.08/2*2~2*24		
剥线长度	Stripping Length [mm]	6~7		
螺丝/扭矩	Screw/Torque(Max)[N.m]	M3/0.5		
工作温度	Operating temperature[℃]	-40~+105		
焊锡温度	Soldering temperature	260℃ /5S		
引针尺寸	Pin dimensions [mm]	0.8*1.0		
PCB板孔径	PCB Hole Diameter [mm]	∅1.5		

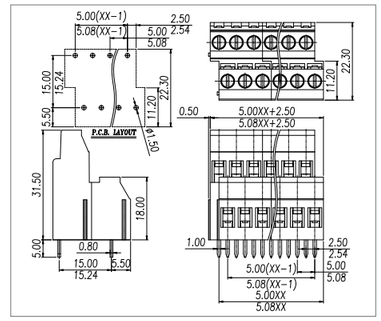



Pitch:5.0/5.08mm

WJ130T2B-5.0/5.08

UL/CUL 技术参数 UL/CUL Technical Data				
等级	Use Group	B	C	D
额定电压	Rated Voltage [V]	300	-	300
额定电流	Rated Current [A]	20	-	10
接线范围 Wire Range	单芯线 Solid [AWG]	26~12		
	多芯线 Stranded [AWG]	26~12		
耐电压	Dielectric Voltage-Withstand	1.6KV		
IEC 技术参数 IEC Technical Data				
过电压类别	Overvoltage Category	Ⅲ	Ⅲ	Ⅱ
污染等级	Contamination Class	3	2	2
额定电压	Rated Voltage [V]	250	400	630
额定电流	Rated Current [A]	20	20	20
额定冲击电压	Impulse withstand voltage [KV]	4	4	4
导线截面积 Conductor cross section	硬质导线 Solid[mm²]	0.5~2.5		
	柔性导线 Flexible[mm²]	0.5~2.5		
材料 Material				
绝缘材料	Insulation Material	PA66		
阻燃等级	Flame retardant rating	UL94V-0		
导体材料	Conductor Material	Copper alloy		
导体表面镀层	Plating of conductor surface	Sn plated		
一般参数 Other Data				
间距/极数	Pitch/Poles [mm]/[P]	5.0,5.08/2*2~2*24		
剥线长度	Stripping Length [mm]	6~7		
螺丝/扭矩	Screw/Torque(Max)[N.m]	M3/0.5		
工作温度	Operating temperature[℃]	-40~+105		
焊锡温度	Soldering temperature	260℃ /5S		
引针尺寸	Pin dimensions [mm]	0.8*1.0		
PCB板孔径	PCB Hole Diameter [mm]	∅1.5		

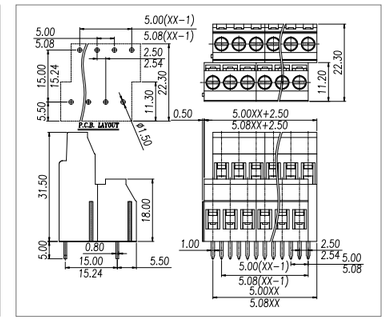



Pitch:5.0/5.08mm

WJ130T3A-5.0/5.08

UL/CUL 技术参数 UL/CUL Technical Data				
等级	Use Group	B	C	D
额定电压	Rated Voltage [V]	300	-	300
额定电流	Rated Current [A]	20	-	10
接线范围 Wire Range	单芯线 Solid [AWG]	26~12		
	多芯线 Stranded [AWG]	26~12		
耐电压	Dielectric Voltage-Withstand	1.6KV		

IEC 技术参数 IEC Technical Data				
过电压类别	Overvoltage Category	Ⅲ	Ⅲ	Ⅱ
污染等级	Contamination Class	3	2	2
额定电压	Rated Voltage [V]	250	400	630
额定电流	Rated Current [A]	17.5	17.5	17.5
额定冲击电压	Impulse withstand voltage [KV]	4	4	4
导线截面积 Conductor cross section	硬质导线 Solid[mm²]	0.5~2.5		
	柔性导线 Flexible[mm²]	0.5~2.5		

材料 Material		
绝缘材料	Insulation Material	PA66
阻燃等级	Flame retardant rating	UL94V-0
导体材料	Conductor Material	Copper alloy
导体表面镀层	Plating of conductor surface	Sn plated

一般参数 Other Data		
间距/极数	Pitch/Poles [mm]/[P]	5.0,5.08/3*2~3*24
剥线长度	Stripping Length [mm]	6~7
螺丝/扭矩	Screw/Torque(Max)[N.m]	M3/0.5
工作温度	Operating temperature[℃]	-40~+105
焊锡温度	Soldering temperature	260℃ /5S
引针尺寸	Pin dimensions [mm]	0.8*1.0
PCB板孔径	PCB Hole Diameter [mm]	∅1.5

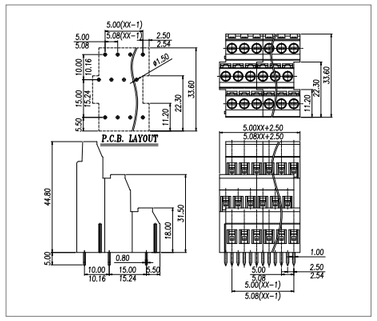



Pitch:5.08mm

WJ131-5.08

UL/CUL 技术参数 UL/CUL Technical Data				
等级	Use Group	B	C	D
额定电压	Rated Voltage [V]	300	-	300
额定电流	Rated Current [A]	20	-	10
接线范围 Wire Range	单芯线 Solid [AWG]	26~12		
	多芯线 Stranded [AWG]	26~12		
耐电压	Dielectric Voltage-Withstand	1.6KV		

IEC 技术参数 IEC Technical Data				
过电压类别	Overvoltage Category	Ⅲ	Ⅲ	Ⅱ
污染等级	Contamination Class	3	2	2
额定电压	Rated Voltage [V]	250	400	630
额定电流	Rated Current [A]	20	20	20
额定冲击电压	Impulse withstand voltage [KV]	4	4	4
导线截面积 Conductor cross section	硬质导线 Solid[mm²]	0.2~2.5		
	柔性导线 Flexible[mm²]	0.2~2.5		

材料 Material		
绝缘材料	Insulation Material	PA66
阻燃等级	Flame retardant rating	UL94V-0
导体材料	Conductor Material	Copper alloy
导体表面镀层	Plating of conductor surface	Sn plated

一般参数 Other Data		
间距/极数	Pitch/Poles [mm]/[P]	5.08/2~24
剥线长度	Stripping Length [mm]	10~11
螺丝/扭矩	Screw/Torque(Max)[N.m]	M3/0.5
工作温度	Operating temperature[℃]	-40~+105
焊锡温度	Soldering temperature	260℃ /5S
引针尺寸	Pin dimensions [mm]	0.9*1.0
PCB板孔径	PCB Hole Diameter [mm]	∅1.6

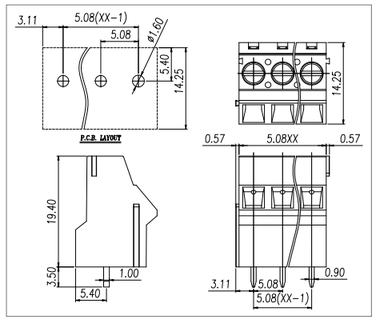

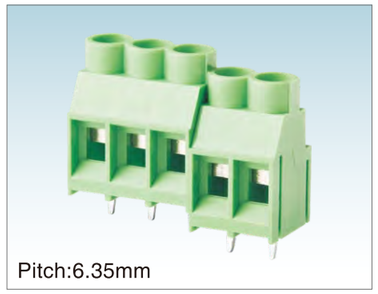

Pitch:6.35mm

WJ635-6.35

UL/CUL 技术参数 UL/CUL Technical Data				
等级	Use Group	B	C	D
额定电压	Rated Voltage [V]	300	-	300
额定电流	Rated Current [A]	30	-	10
接线范围 Wire Range	单芯线 Solid [AWG]	26~10		
	多芯线 Stranded [AWG]	26~10		
耐电压	Dielectric Voltage-Withstand	1.6KV		

IEC 技术参数 IEC Technical Data				
过电压类别	Overvoltage Category	Ⅲ	Ⅲ	Ⅱ
污染等级	Contamination Class	3	2	2
额定电压	Rated Voltage [V]	400	630	1000
额定电流	Rated Current [A]	32	32	32
额定冲击电压	Impulse withstand voltage [KV]	6	6	6
导线截面积 Conductor cross section	硬质导线 Solid[mm²]	0.5~4.0		
	柔性导线 Flexible[mm²]	0.5~4.0		

材料 Material		
绝缘材料	Insulation Material	PA66
阻燃等级	Flame retardant rating	UL94V-0
导体材料	Conductor Material	Copper alloy
导体表面镀层	Plating of conductor surface	Sn plated

一般参数 Other Data		
间距/极数	Pitch/Poles [mm]/[P]	6.35/2~24
剥线长度	Stripping Length [mm]	6~7
螺丝/扭矩	Screw/Torque(Max)[N.m]	M3/0.5
工作温度	Operating temperature[℃]	-40~+105
焊锡温度	Soldering temperature	260℃ /5S
引针尺寸	Pin dimensions [mm]	0.8*1.0
PCB板孔径	PCB Hole Diameter [mm]	∅1.5

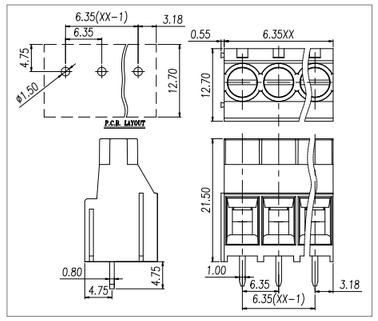

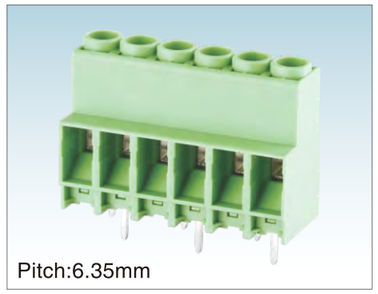

Pitch:6.35mm

WJ635VK-6.35

UL/CUL 技术参数 UL/CUL Technical Data				
等级	Use Group	B	C	D
额定电压	Rated Voltage [V]	600	600	600
额定电流	Rated Current [A]	30	30	5
接线范围 Wire Range	单芯线 Solid [AWG]	24~10		
	多芯线 Stranded [AWG]	24~10		
耐电压	Dielectric Voltage-Withstand	2.2KV		

IEC 技术参数 IEC Technical Data				
过电压类别	Overvoltage Category	Ⅲ	Ⅲ	Ⅱ
污染等级	Contamination Class	3	2	2
额定电压	Rated Voltage [V]	800	1000	1000
额定电流	Rated Current [A]	41	41	41
额定冲击电压	Impulse withstand voltage [KV]	8	8	8
导线截面积 Conductor cross section	硬质导线 Solid[mm²]	0.2~6.0		
	柔性导线 Flexible[mm²]	0.2~4.0		

材料 Material		
绝缘材料	Insulation Material	PA66
阻燃等级	Flame retardant rating	UL94V-0
导体材料	Conductor Material	Copper alloy
导体表面镀层	Plating of conductor surface	Sn plated

一般参数 Other Data		
间距/极数	Pitch/Poles [mm]/[P]	6.35/2~18
剥线长度	Stripping Length [mm]	8
螺丝/扭矩	Screw/Torque(Max)[N.m]	M3/0.5
工作温度	Operating temperature[℃]	-40~+105
焊锡温度	Soldering temperature	260℃ /5S
引针尺寸	Pin dimensions [mm]	0.9*0.9
PCB板孔径	PCB Hole Diameter [mm]	∅1.5

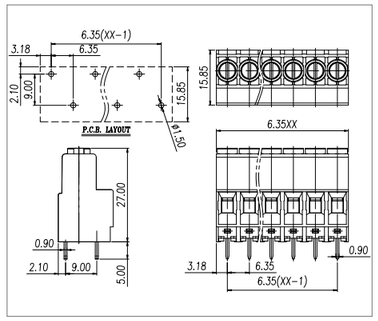

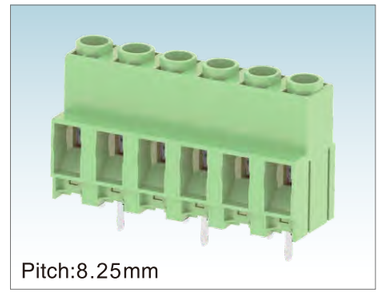

Pitch:8.25mm

WJ635VK-8.25

UL/CUL 技术参数 UL/CUL Technical Data				
等级	Use Group	B	C	D
额定电压	Rated Voltage [V]	600	600	600
额定电流	Rated Current [A]	30	30	5
接线范围 Wire Range	单芯线 Solid [AWG]	24~10		
	多芯线 Stranded [AWG]	24~10		
耐电压	Dielectric Voltage-Withstand	2.2KV		

IEC 技术参数 IEC Technical Data				
过电压类别	Overvoltage Category	Ⅲ	Ⅲ	Ⅱ
污染等级	Contamination Class	3	2	2
额定电压	Rated Voltage [V]	800	1000	1000
额定电流	Rated Current [A]	41	41	41
额定冲击电压	Impulse withstand voltage [KV]	8	8	8
导线截面积 Conductor cross section	硬质导线 Solid[mm²]	0.2~6.0		
	柔性导线 Flexible[mm²]	0.2~4.0		

材料 Material		
绝缘材料	Insulation Material	PA66
阻燃等级	Flame retardant rating	UL94V-0
导体材料	Conductor Material	Copper alloy
导体表面镀层	Plating of conductor surface	Sn plated

一般参数 Other Data		
间距/极数	Pitch/Poles [mm]/[P]	8.25/2~18
剥线长度	Stripping Length [mm]	8
螺丝/扭矩	Screw/Torque(Max)[N.m]	M3/0.5
工作温度	Operating temperature[℃]	-40~+105
焊锡温度	Soldering temperature	260℃ /5S
引针尺寸	Pin dimensions [mm]	0.9*0.9
PCB板孔径	PCB Hole Diameter [mm]	∅1.5

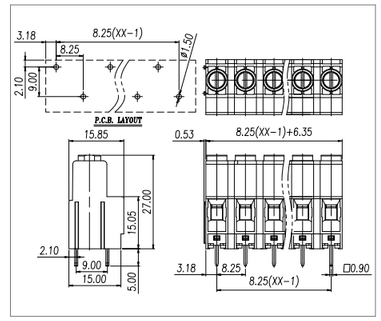

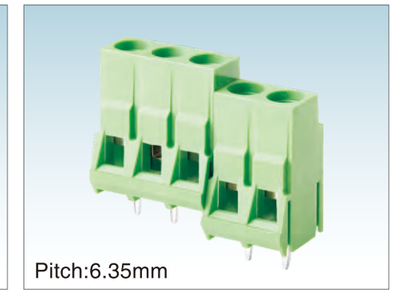

Pitch:6.35mm

WJ636-6.35

UL/CUL 技术参数 UL/CUL Technical Data				
等级	Use Group	B	C	D
额定电压	Rated Voltage [V]	300	-	300
额定电流	Rated Current [A]	30	-	10
接线范围 Wire Range	单芯线 Solid [AWG]	26~10		
	多芯线 Stranded [AWG]	26~10		
耐电压	Dielectric Voltage-Withstand	1.6KV		

IEC 技术参数 IEC Technical Data				
过电压类别	Overvoltage Category	Ⅲ	Ⅲ	Ⅱ
污染等级	Contamination Class	3	2	2
额定电压	Rated Voltage [V]	400	630	1000
额定电流	Rated Current [A]	32	32	32
额定冲击电压	Impulse withstand voltage [KV]	6	6	6
导线截面积 Conductor cross section	硬质导线 Solid[mm²]	0.5~4.0		
	柔性导线 Flexible[mm²]	0.5~4.0		

材料 Material		
绝缘材料	Insulation Material	PA66
阻燃等级	Flame retardant rating	UL94V-0
导体材料	Conductor Material	Copper alloy
导体表面镀层	Plating of conductor surface	Sn plated

一般参数 Other Data		
间距/极数	Pitch/Poles [mm]/[P]	6.35/2~24
剥线长度	Stripping Length [mm]	7~8
螺丝/扭矩	Screw/Torque(Max)[N.m]	M3/0.5
工作温度	Operating temperature[℃]	-40~+105
焊锡温度	Soldering temperature	260℃ /5S
引针尺寸	Pin dimensions [mm]	0.8*1.0
PCB板孔径	PCB Hole Diameter [mm]	∅1.5

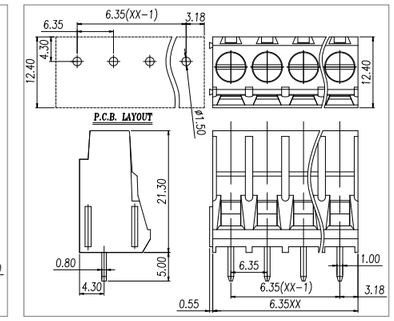



Pitch:7.5mm

WJ750-7.5

UL/CUL 技术参数 UL/CUL Technical Data				
等级	Use Group	B	C	D
额定电压	Rated Voltage [V]	300	-	300
额定电流	Rated Current [A]	30	-	10
接线范围 Wire Range	单芯线 Solid [AWG]	26~10		
	多芯线 Stranded [AWG]	26~10		
耐电压	Dielectric Voltage-Withstand	1.6KV		

IEC 技术参数 IEC Technical Data				
过电压类别	Overvoltage Category	Ⅲ	Ⅲ	Ⅱ
污染等级	Contamination Class	3	2	2
额定电压	Rated Voltage [V]	450	630	1000
额定电流	Rated Current [A]	32	32	32
额定冲击电压	Impulse withstand voltage [KV]	6	6	6
导线截面积 Conductor cross section	硬质导线 Solid[mm²]	0.5~4.0		
	柔性导线 Flexible[mm²]	0.5~4.0		

材料 Material		
绝缘材料	Insulation Material	PA66
阻燃等级	Flame retardant rating	UL94V-0
导体材料	Conductor Material	Copper alloy
导体表面镀层	Plating of conductor surface	Sn plated

一般参数 Other Data		
间距/极数	Pitch/Poles [mm]/[P]	7.5/2~24
剥线长度	Stripping Length [mm]	7
螺丝/扭矩	Screw/Torque(Max)[N.m]	M3/0.5
工作温度	Operating temperature[℃]	-40~+105
焊锡温度	Soldering temperature	260℃ /5S
引针尺寸	Pin dimensions [mm]	0.8*1.0
PCB板孔径	PCB Hole Diameter [mm]	∅1.5

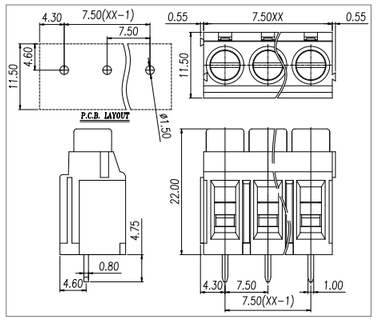



Pitch:7.62mm

WJ762-7.62

UL/CUL 技术参数 UL/CUL Technical Data				
等级	Use Group	B	C	D
额定电压	Rated Voltage [V]	300	-	300
额定电流	Rated Current [A]	30	-	10
接线范围 Wire Range	单芯线 Solid [AWG]	26~10		
	多芯线 Stranded [AWG]	26~10		
耐电压	Dielectric Voltage-Withstand	1.6KV		

IEC 技术参数 IEC Technical Data				
过电压类别	Overvoltage Category	Ⅲ	Ⅲ	Ⅱ
污染等级	Contamination Class	3	2	2
额定电压	Rated Voltage [V]	500	630	1000
额定电流	Rated Current [A]	32	32	32
额定冲击电压	Impulse withstand voltage [KV]	6	6	6
导线截面积 Conductor cross section	硬质导线 Solid[mm²]	0.5~4.0		
	柔性导线 Flexible[mm²]	0.5~4.0		

材料 Material		
绝缘材料	Insulation Material	PA66
阻燃等级	Flame retardant rating	UL94V-0
导体材料	Conductor Material	Copper alloy
导体表面镀层	Plating of conductor surface	Sn plated

一般参数 Other Data		
间距/极数	Pitch/Poles [mm]/[P]	7.62/2~24
剥线长度	Stripping Length [mm]	6~7
螺丝/扭矩	Screw/Torque(Max)[N.m]	M3/0.5
工作温度	Operating temperature[℃]	-40~+105
焊锡温度	Soldering temperature	260℃ /5S
引针尺寸	Pin dimensions [mm]	0.8*1.0
PCB板孔径	PCB Hole Diameter [mm]	∅1.5

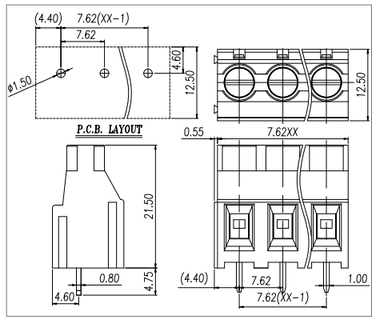



Pitch:9.5mm

WJ950-9.5

UL/CUL 技术参数 UL/CUL Technical Data				
等级	Use Group	B	C	D
额定电压	Rated Voltage [V]	300	300	300
额定电流	Rated Current [A]	30	30	10
接线范围 Wire Range	单芯线 Solid [AWG]	26~10		
	多芯线 Stranded [AWG]	26~10		
耐电压	Dielectric Voltage-Withstand	1.6KV		

IEC 技术参数 IEC Technical Data				
过电压类别	Overvoltage Category	Ⅲ	Ⅲ	Ⅱ
污染等级	Contamination Class	3	2	2
额定电压	Rated Voltage [V]	630	1000	1000
额定电流	Rated Current [A]	32	32	32
额定冲击电压	Impulse withstand voltage [KV]	8	8	8
导线截面积 Conductor cross section	硬质导线 Solid[mm²]	0.5~4.0		
	柔性导线 Flexible[mm²]	0.5~4.0		

材料 Material		
绝缘材料	Insulation Material	PA66
阻燃等级	Flame retardant rating	UL94V-0
导体材料	Conductor Material	Copper alloy
导体表面镀层	Plating of conductor surface	Sn plated

一般参数 Other Data		
间距/极数	Pitch/Poles [mm]/[P]	9.5/2~24
剥线长度	Stripping Length [mm]	6~7
螺丝/扭矩	Screw/Torque(Max)[N.m]	M3/0.5
工作温度	Operating temperature[℃]	-40~+105
焊锡温度	Soldering temperature	260℃ /5S
引针尺寸	Pin dimensions [mm]	0.8*1.0
PCB板孔径	PCB Hole Diameter [mm]	∅1.6

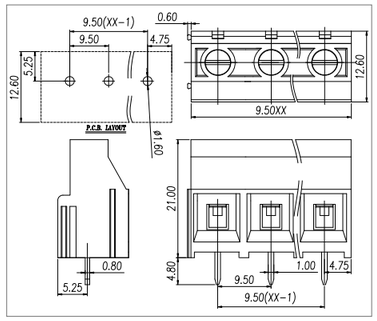



Pitch:10.16mm

WJ116V-10.16

UL/CUL 技术参数 UL/CUL Technical Data				
等级	Use Group	B	C	D
额定电压	Rated Voltage [V]	300	300	600
额定电流	Rated Current [A]	52	52	5
接线范围 Wire Range	单芯线 Solid [AWG]	20~6		
	多芯线 Stranded [AWG]	20~6		
耐电压	Dielectric Voltage-Withstand	2.2KV		

IEC 技术参数 IEC Technical Data				
过电压类别	Overvoltage Category	Ⅲ	Ⅲ	Ⅱ
污染等级	Contamination Class	3	2	2
额定电压	Rated Voltage [V]	630	1000	1000
额定电流	Rated Current [A]	57	57	57
额定冲击电压	Impulse withstand voltage [KV]	8	8	8
导线截面积 Conductor cross section	硬质导线 Solid[mm²]	2.5~10		
	柔性导线 Flexible[mm²]	2.5~10		

材料 Material		
绝缘材料	Insulation Material	PA66
阻燃等级	Flame retardant rating	UL94V-0
导体材料	Conductor Material	Copper alloy
导体表面镀层	Plating of conductor surface	Sn plated

一般参数 Other Data		
间距/极数	Pitch/Poles [mm]/[P]	10.16/2~24
剥线长度	Stripping Length [mm]	10
螺丝/扭矩	Screw/Torque(Max)[N.m]	M4/1.2
工作温度	Operating temperature[℃]	-40~+105
焊锡温度	Soldering temperature	260℃ /5S
引针尺寸	Pin dimensions [mm]	1.2*1.6
PCB板孔径	PCB Hole Diameter [mm]	∅2.4

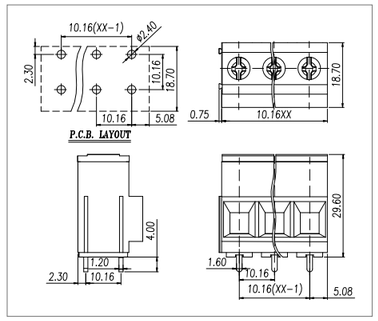



Pitch:10.16mm

WJ116VW-10.16

UL/CUL 技术参数 UL/CUL Technical Data				
等级	Use Group	B	C	D
额定电压	Rated Voltage [V]	600	600	600
额定电流	Rated Current [A]	65	65	5
接线范围 Wire Range	单芯线 Solid [AWG]	20~6		
	多芯线 Stranded [AWG]	20~6		
耐电压	Dielectric Voltage-Withstand	2.2KV		

IEC 技术参数 IEC Technical Data				
过电压类别	Overvoltage Category	Ⅲ	Ⅲ	Ⅱ
污染等级	Contamination Class	3	2	2
额定电压	Rated Voltage [V]	630	1000	1000
额定电流	Rated Current [A]	57	57	57
额定冲击电压	Impulse withstand voltage [KV]	8	8	8
导线截面积 Conductor cross section	硬质导线 Solid[mm²]	2.5~16		
	柔性导线 Flexible[mm²]	2.5~16		

材料 Material		
绝缘材料	Insulation Material	PA66
阻燃等级	Flame retardant rating	UL94V-0
导体材料	Conductor Material	Copper alloy
导体表面镀层	Plating of conductor surface	Sn plated

一般参数 Other Data		
间距/极数	Pitch/Poles [mm]/[P]	10.16/2~16
剥线长度	Stripping Length [mm]	11~12
螺丝/扭矩	Screw/Torque(Max)[N.m]	M4/1.2
工作温度	Operating temperature[℃]	-40~+105
焊锡温度	Soldering temperature	260℃ /5S
引针尺寸	Pin dimensions [mm]	1.0*1.0
PCB板孔径	PCB Hole Diameter [mm]	∅1.7

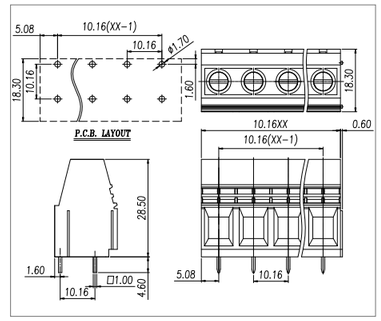



Pitch:10.16mm

WJ116VK-10.16

UL/CUL 技术参数 UL/CUL Technical Data				
等级	Use Group	B	C	D
额定电压	Rated Voltage [V]	600	600	600
额定电流	Rated Current [A]	65	65	5
接线范围 Wire Range	单芯线 Solid [AWG]	20~6		
	多芯线 Stranded [AWG]	20~6		
耐电压	Dielectric Voltage-Withstand	2.2KV		

IEC 技术参数 IEC Technical Data				
过电压类别	Overvoltage Category	Ⅲ	Ⅲ	Ⅱ
污染等级	Contamination Class	3	2	2
额定电压	Rated Voltage [V]	630	1000	1000
额定电流	Rated Current [A]	76	76	76
额定冲击电压	Impulse withstand voltage [KV]	8	8	8
导线截面积 Conductor cross section	硬质导线 Solid[mm²]	2.5~16		
	柔性导线 Flexible[mm²]	2.5~16		

材料 Material		
绝缘材料	Insulation Material	PA66
阻燃等级	Flame retardant rating	UL94V-0
导体材料	Conductor Material	Copper alloy
导体表面镀层	Plating of conductor surface	Sn plated

一般参数 Other Data		
间距/极数	Pitch/Poles [mm]/[P]	10.16/1~14
剥线长度	Stripping Length [mm]	10
螺丝/扭矩	Screw/Torque(Max)[N.m]	M4/1.2
工作温度	Operating temperature[℃]	-40~+105
焊锡温度	Soldering temperature	260℃ /5S
引针尺寸	Pin dimensions [mm]	0.9*1.0
PCB板孔径	PCB Hole Diameter [mm]	∅1.6

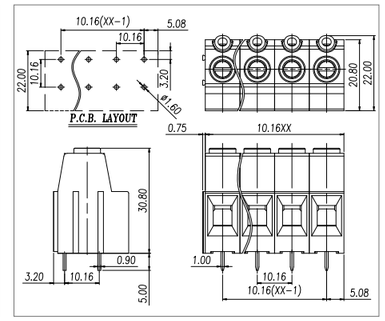



Pitch:12.7mm

WJ116VK-12.7

UL/CUL 技术参数 UL/CUL Technical Data				
等级	Use Group	B	C	D
额定电压	Rated Voltage [V]	600	600	600
额定电流	Rated Current [A]	65	65	5
接线范围 Wire Range	单芯线 Solid [AWG]	20~6		
	多芯线 Stranded [AWG]	20~6		
耐电压	Dielectric Voltage-Withstand	2.2KV		
IEC 技术参数 IEC Technical Data				
过电压类别	Overvoltage Category	Ⅲ	Ⅲ	Ⅱ
污染等级	Contamination Class	3	2	2
额定电压	Rated Voltage [V]	630	1000	1000
额定电流	Rated Current [A]	76	76	76
额定冲击电压	Impulse withstand voltage [KV]	8	8	8
导线截面积 Conductor cross section	硬质导线 Solid[mm²]	2.5~16		
	柔性导线 Flexible[mm²]	2.5~16		
材料 Material				
绝缘材料	Insulation Material	PA66		
阻燃等级	Flame retardant rating	UL94V-0		
导体材料	Conductor Material	Copper alloy		
导体表面镀层	Plating of conductor surface	Sn plated		
一般参数 Other Data				
间距/极数	Pitch/Poles [mm]/[P]	12.7/2~14		
剥线长度	Stripping Length [mm]	10		
螺丝/扭矩	Screw/Torque(Max)[N.m]	M4/1.2		
工作温度	Operating temperature[℃]	-40~+105		
焊锡温度	Soldering temperature	260℃ /5S		
引针尺寸	Pin dimensions [mm]	0.9*1.0		
PCB板孔径	PCB Hole Diameter [mm]	∅1.6		

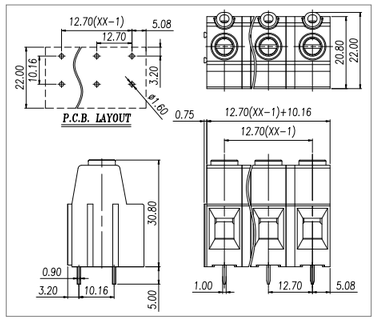



Pitch:12.7mm

WJ117-12.7

UL/CUL 技术参数 UL/CUL Technical Data				
等级	Use Group	B	C	D
额定电压	Rated Voltage [V]	600	600	600
额定电流	Rated Current [A]	65	65	5
接线范围 Wire Range	单芯线 Solid [AWG]	20~6		
	多芯线 Stranded [AWG]	20~6		
耐电压	Dielectric Voltage-Withstand	2.2KV		
IEC 技术参数 IEC Technical Data				
过电压类别	Overvoltage Category	Ⅲ	Ⅲ	Ⅱ
污染等级	Contamination Class	3	2	2
额定电压	Rated Voltage [V]	1000	1000	1000
额定电流	Rated Current [A]	57	57	57
额定冲击电压	Impulse withstand voltage [KV]	8	8	8
导线截面积 Conductor cross section	硬质导线 Solid[mm²]	2.5~16		
	柔性导线 Flexible[mm²]	2.5~16		
材料 Material				
绝缘材料	Insulation Material	PA66		
阻燃等级	Flame retardant rating	UL94V-0		
导体材料	Conductor Material	Copper alloy		
导体表面镀层	Plating of conductor surface	Sn plated		
一般参数 Other Data				
间距/极数	Pitch/Poles [mm]/[P]	12.7/2-16		
剥线长度	Stripping Length [mm]	11~12		
螺丝/扭矩	Screw/Torque(Max)[N.m]	M4/1.2		
工作温度	Operating temperature[℃]	-40~+105		
焊锡温度	Soldering temperature	260℃ /5S		
引针尺寸	Pin dimensions [mm]	1.0*1.0		
PCB板孔径	PCB Hole Diameter [mm]	∅1.7		

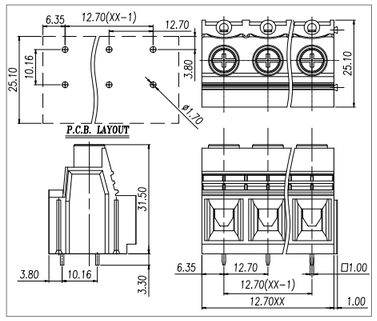



Pitch:15.0mm

WJ118-15.0

UL/CUL 技术参数 UL/CUL Technical Data				
等级	Use Group	B	C	D
额定电压	Rated Voltage [V]	600	600	600
额定电流	Rated Current [A]	115	115	5
接线范围 Wire Range	单芯线 Solid [AWG]	20~2		
	多芯线 Stranded [AWG]	20~2		
耐电压	Dielectric Voltage-Withstand	2.2KV		
IEC 技术参数 IEC Technical Data				
过电压类别	Overvoltage Category	Ⅲ	Ⅲ	Ⅱ
污染等级	Contamination Class	3	2	2
额定电压	Rated Voltage [V]	1000	1000	1000
额定电流	Rated Current [A]	125	125	125
额定冲击电压	Impulse withstand voltage [KV]	8	8	8
导线截面积 Conductor cross section	硬质导线 Solid[mm²]	0.5~35		
	柔性导线 Flexible[mm²]	0.5~35		
材料 Material				
绝缘材料	Insulation Material	PA66		
阻燃等级	Flame retardant rating	UL94V-0		
导体材料	Conductor Material	Copper alloy		
导体表面镀层	Plating of conductor surface	Sn plated		
一般参数 Other Data				
间距/极数	Pitch/Poles [mm]/[P]	15.0/1~12		
剥线长度	Stripping Length [mm]	17~18		
螺丝/扭矩	Screw/Torque(Max)[N.m]	M5/2.0		
工作温度	Operating temperature[℃]	-40~+105		
焊锡温度	Soldering temperature	260℃ /5S		
引针尺寸	Pin dimensions [mm]	1.2*1.2		
PCB板孔径	PCB Hole Diameter [mm]	∅2.0		

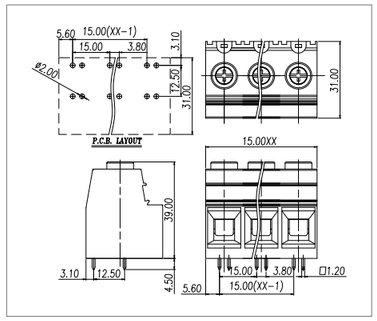



Pitch:15.0mm

WJ118M-15.0

UL/CUL 技术参数 UL/CUL Technical Data				
等级	Use Group	B	C	D
额定电压	Rated Voltage [V]	600	600	600
额定电流	Rated Current [A]	115	115	5
接线范围 Wire Range	单芯线 Solid [AWG]	20~2		
	多芯线 Stranded [AWG]	20~2		
耐电压	Dielectric Voltage-Withstand	2.2KV		
IEC 技术参数 IEC Technical Data				
过电压类别	Overvoltage Category	Ⅲ	Ⅲ	Ⅱ
污染等级	Contamination Class	3	2	2
额定电压	Rated Voltage [V]	1000	1000	1000
额定电流	Rated Current [A]	125	125	125
额定冲击电压	Impulse withstand voltage [KV]	8	8	8
导线截面积 Conductor cross section	硬质导线 Solid[mm²]	0.5~35		
	柔性导线 Flexible[mm²]	0.5~35		
材料 Material				
绝缘材料	Insulation Material	PA66		
阻燃等级	Flame retardant rating	UL94V-0		
导体材料	Conductor Material	Copper alloy		
导体表面镀层	Plating of conductor surface	Sn plated		
一般参数 Other Data				
间距/极数	Pitch/Poles [mm]/[P]	15.0/2~10		
剥线长度	Stripping Length [mm]	17~18		
螺丝/扭矩	Screw/Torque(Max)[N.m]	M5/2.0		
工作温度	Operating temperature[℃]	-40~+105		
焊锡温度	Soldering temperature	260℃ /5S		
引针尺寸	Pin dimensions [mm]	1.2*1.2		
PCB板孔径	PCB Hole Diameter [mm]	∅2.0		

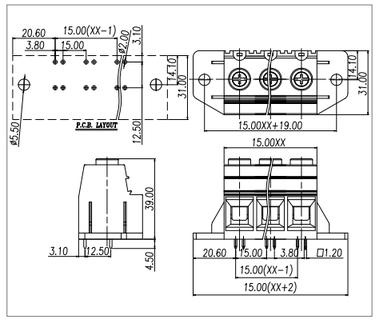



Pitch:15.0mm

WJ118ML-15.0

UL/CUL 技术参数 UL/CUL Technical Data				
等级	Use Group	B	C	D
额定电压	Rated Voltage [V]	600	600	600
额定电流	Rated Current [A]	115	115	5
接线范围 Wire Range	单芯线 Solid [AWG]	20~2		
	多芯线 Stranded [AWG]	20~2		
耐电压	Dielectric Voltage-Withstand	2.2KV		
IEC 技术参数 IEC Technical Data				
过电压类别	Overvoltage Category	Ⅲ	Ⅲ	Ⅱ
污染等级	Contamination Class	3	2	2
额定电压	Rated Voltage [V]	1000	1000	1000
额定电流	Rated Current [A]	125	125	125
额定冲击电压	Impulse withstand voltage [KV]	8	8	8
导线截面积 Conductor cross section	硬质导线 Solid[mm²]	0.5~35		
	柔性导线 Flexible[mm²]	0.5~35		
材料 Material				
绝缘材料	Insulation Material	PA66		
阻燃等级	Flame retardant rating	UL94V-0		
导体材料	Conductor Material	Copper alloy		
导体表面镀层	Plating of conductor surface	Sn plated		
一般参数 Other Data				
间距/极数	Pitch/Poles [mm]/[P]	15.0/1		
剥线长度	Stripping Length [mm]	17~18		
螺丝/扭矩	Screw/Torque(Max)[N.m]	M5/2.0		
工作温度	Operating temperature[℃]	-40~+105		
焊锡温度	Soldering temperature	260℃ /5S		
引针尺寸	Pin dimensions [mm]	1.2*1.2		
PCB板孔径	PCB Hole Diameter [mm]	∅2.0		

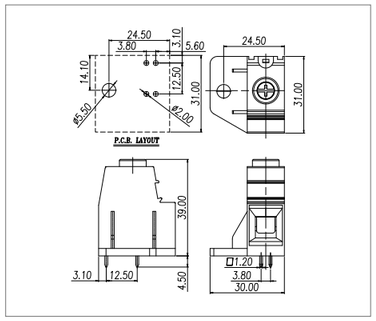



Pitch:5.0mm

WJ330-5.0

UL/CUL 技术参数 UL/CUL Technical Data				
等级	Use Group	B	C	D
额定电压	Rated Voltage [V]	300	-	-
额定电流	Rated Current [A]	15	-	-
接线范围 Wire Range	单芯线 Solid [AWG]	28~14		
	多芯线 Stranded [AWG]	28~14		
耐电压	Dielectric Voltage-Withstand	1.6KV		
IEC 技术参数 IEC Technical Data				
过电压类别	Overvoltage Category	Ⅲ	Ⅲ	Ⅱ
污染等级	Contamination Class	3	2	2
额定电压	Rated Voltage [V]	250	400	630
额定电流	Rated Current [A]	24	24	24
额定冲击电压	Impulse withstand voltage [KV]	4	4	4
导线截面积 Conductor cross section	硬质导线 Solid[mm²]	0.5~2.5		
	柔性导线 Flexible[mm²]	0.5~2.5		
材料 Material				
绝缘材料	Insulation Material	PA66		
阻燃等级	Flame retardant rating	UL94V-0		
导体材料	Conductor Material	Copper alloy		
导体表面镀层	Plating of conductor surface	Sn plated		
一般参数 Other Data				
间距/极数	Pitch/Poles [mm]/[P]	5.0/2~24		
剥线长度	Stripping Length [mm]	4.5~5		
螺丝/扭矩	Screw/Torque(Max)[N.m]	M2.5/0.4		
工作温度	Operating temperature[℃]	-40~+105		
焊锡温度	Soldering temperature	260℃ /5S		
引针尺寸	Pin dimensions [mm]	0.8*1.0		
PCB板孔径	PCB Hole Diameter [mm]	∅1.5		

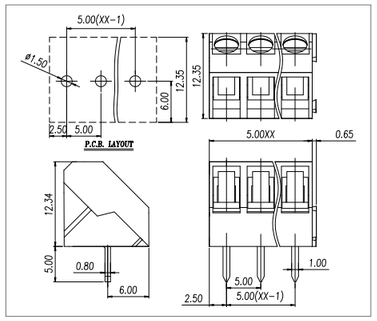

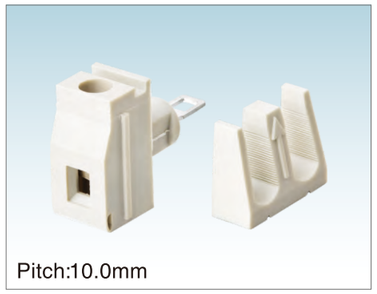

Pitch:10.0mm

WJ410-10.0

UL/CUL 技术参数 UL/CUL Technical Data				
等级	Use Group	B	C	D
额定电压	Rated Voltage [V]	300	-	300
额定电流	Rated Current [A]	20	-	10
接线范围 Wire Range	单芯线 Solid [AWG]	26~12		
	多芯线 Stranded [AWG]	26~12		
耐电压	Dielectric Voltage-Withstand	2KV		
IEC 技术参数 IEC Technical Data				
过电压类别	Overvoltage Category	Ⅲ	Ⅲ	Ⅱ
污染等级	Contamination Class	3	2	2
额定电压	Rated Voltage [V]	250	400	630
额定电流	Rated Current [A]	24	24	24
额定冲击电压	Impulse withstand voltage [KV]	6	6	6
导线截面积 Conductor cross section	硬质导线 Solid[mm²]	0.5~2.5		
	柔性导线 Flexible[mm²]	0.5~2.5		
材料 Material				
绝缘材料	Insulation Material	PA66		
阻燃等级	Flame retardant rating	UL94V-0		
导体材料	Conductor Material	Copper alloy		
导体表面镀层	Plating of conductor surface	Sn plated		
一般参数 Other Data				
间距/极数	Pitch/Poles [mm]/[P]	10.0/1~24		
剥线长度	Stripping Length [mm]	4.5-5		
螺丝/扭矩	Screw/Torque(Max)[N.m]	M3/0.5		
工作温度	Operating temperature[℃]	-40~+105		
焊锡温度	Soldering temperature	260℃ /5S		
引针尺寸	Pin dimensions [mm]	/		
PCB板孔径	PCB Hole Diameter [mm]	/		

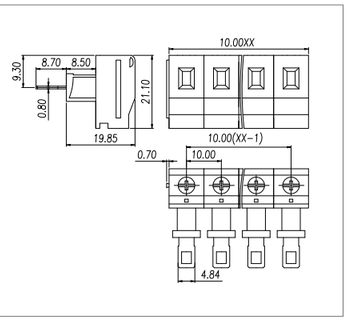

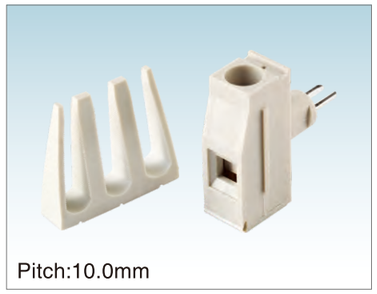

Pitch:10.0mm

WJ1010-10.0

UL/CUL 技术参数 UL/CUL Technical Data				
等级	Use Group	B	C	D
额定电压	Rated Voltage [V]	300	-	300
额定电流	Rated Current [A]	30	-	10
接线范围 Wire Range	单芯线 Solid [AWG]	26~10		
	多芯线 Stranded [AWG]	26~10		
耐电压	Dielectric Voltage-Withstand	1.6KV		
IEC 技术参数 IEC Technical Data				
过电压类别	Overvoltage Category	Ⅲ	Ⅲ	Ⅱ
污染等级	Contamination Class	3	2	2
额定电压	Rated Voltage [V]	250	400	630
额定电流	Rated Current [A]	32	32	32
额定冲击电压	Impulse withstand voltage [KV]	6	6	6
导线截面积 Conductor cross section	硬质导线 Solid[mm²]	0.5~4.0		
	柔性导线 Flexible[mm²]	0.5~4.0		
材料 Material				
绝缘材料	Insulation Material	PA66		
阻燃等级	Flame retardant rating	UL94V-0		
导体材料	Conductor Material	Copper alloy		
导体表面镀层	Plating of conductor surface	Sn plated		
一般参数 Other Data				
间距/极数	Pitch/Poles [mm]/[P]	10.0/1~24		
剥线长度	Stripping Length [mm]	4.5~5		
螺丝/扭矩	Screw/Torque(Max)[N.m]	M4/1.2		
工作温度	Operating temperature[℃]	-40~+105		
焊锡温度	Soldering temperature	260℃ /5S		
引针尺寸	Pin dimensions [mm]	/		
PCB板孔径	PCB Hole Diameter [mm]	/		

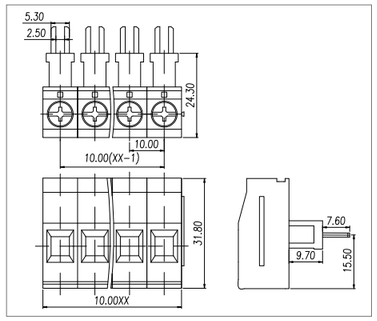

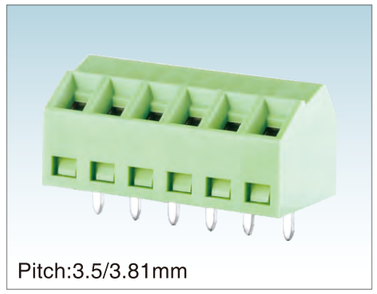

Pitch:3.5/3.81mm

XD350-3.5/XD381-3.81

UL/CUL 技术参数 UL/CUL Technical Data				
等级	Use Group	B	C	D
额定电压	Rated Voltage [V]	300	-	300
额定电流	Rated Current [A]	10	-	10
接线范围 Wire Range	单芯线 Solid [AWG]	26~16		
	多芯线 Stranded [AWG]	26~16		
耐电压	Dielectric Voltage-Withstand	1.6KV		
IEC 技术参数 IEC Technical Data				
过电压类别	Overvoltage Category	Ⅲ	Ⅲ	Ⅱ
污染等级	Contamination Class	3	2	2
额定电压	Rated Voltage [V]	160	200	400
额定电流	Rated Current [A]	10	10	10
额定冲击电压	Impulse withstand voltage [KV]	2.5	2.5	2.5
导线截面积 Conductor cross section	硬质导线 Solid[mm²]	0.2~1.5		
	柔性导线 Flexible[mm²]	0.2~1.5		
材料 Material				
绝缘材料	Insulation Material	PA66		
阻燃等级	Flame retardant rating	UL94V-0		
导体材料	Conductor Material	Copper alloy		
导体表面镀层	Plating of conductor surface	Sn plated		
一般参数 Other Data				
间距/极数	Pitch/Poles [mm]/[P]	3.5,3.81/2~24		
剥线长度	Stripping Length [mm]	5		
螺丝/扭矩	Screw/Torque(Max)[N.m]	M2/0.2		
工作温度	Operating temperature[℃]	-40~+105		
焊锡温度	Soldering temperature	260℃ /5S		
引针尺寸	Pin dimensions [mm]	0.5*0.8		
PCB板孔径	PCB Hole Diameter [mm]	∅1.1		

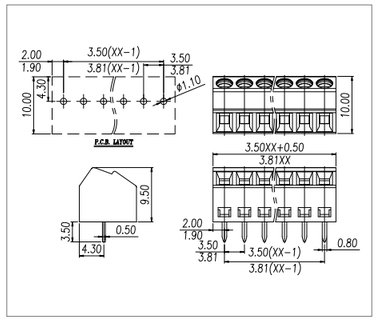

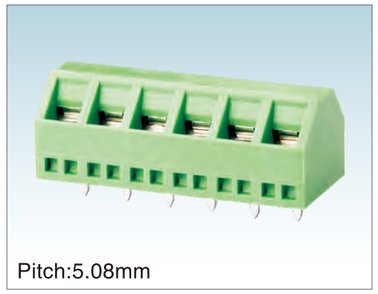

Pitch:5.08mm

XD508-5.08

UL/CUL 技术参数 UL/CUL Technical Data				
等级	Use Group	B	C	D
额定电压	Rated Voltage [V]	300	-	300
额定电流	Rated Current [A]	15	-	10
接线范围 Wire Range	单芯线 Solid [AWG]	26~14		
	多芯线 Stranded [AWG]	26~14		
耐电压	Dielectric Voltage-Withstand	1.6KV		
IEC 技术参数 IEC Technical Data				
过电压类别	Overvoltage Category	Ⅲ	Ⅲ	Ⅱ
污染等级	Contamination Class	3	2	2
额定电压	Rated Voltage [V]	250	400	630
额定电流	Rated Current [A]	17.5	17.5	17.5
额定冲击电压	Impulse withstand voltage [KV]	4	4	4
导线截面积 Conductor cross section	硬质导线 Solid[mm²]	0.5~1.5		
	柔性导线 Flexible[mm²]	0.5~1.5		
材料 Material				
绝缘材料	Insulation Material	PA66		
阻燃等级	Flame retardant rating	UL94V-0		
导体材料	Conductor Material	Copper alloy		
导体表面镀层	Plating of conductor surface	Sn plated		
一般参数 Other Data				
间距/极数	Pitch/Poles [mm]/[P]	5.08/2~24		
剥线长度	Stripping Length [mm]	6~7		
螺丝/扭矩	Screw/Torque(Max)[N.m]	M3/0.5		
工作温度	Operating temperature[℃]	-40~+105		
焊锡温度	Soldering temperature	260℃ /5S		
引针尺寸	Pin dimensions [mm]	0.5*1.0		
PCB板孔径	PCB Hole Diameter [mm]	∅1.4		

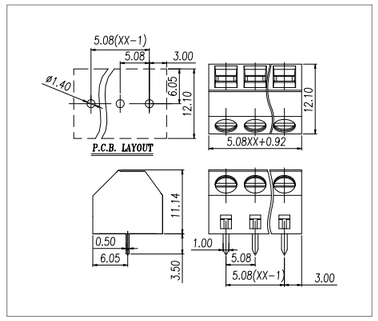

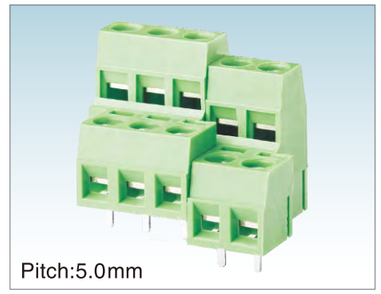

Pitch:5.0mm

WJA500-5.0

UL/CUL 技术参数 UL/CUL Technical Data				
等级	Use Group	B	C	D
额定电压	Rated Voltage [V]	300	-	300
额定电流	Rated Current [A]	12	-	10
接线范围 Wire Range	单芯线 Solid [AWG]	26~14		
	多芯线 Stranded [AWG]	26~14		
耐电压	Dielectric Voltage-Withstand	1.6KV		
IEC 技术参数 IEC Technical Data				
过电压类别	Overvoltage Category	Ⅲ	Ⅲ	Ⅱ
污染等级	Contamination Class	3	2	2
额定电压	Rated Voltage [V]	160	250	400
额定电流	Rated Current [A]	17.5	17.5	17.5
额定冲击电压	Impulse withstand voltage [KV]	4	4	4
导线截面积 Conductor cross section	硬质导线 Solid[mm²]	0.5~1.5		
	柔性导线 Flexible[mm²]	0.5~1.5		
材料 Material				
绝缘材料	Insulation Material	PA66		
阻燃等级	Flame retardant rating	UL94V-0		
导体材料	Conductor Material	Copper alloy		
导体表面镀层	Plating of conductor surface	Sn plated		
一般参数 Other Data				
间距/极数	Pitch/Poles [mm]/[P]	5.0/2*2~2*24		
剥线长度	Stripping Length [mm]	5~6		
螺丝/扭矩	Screw/Torque(Max)[N.m]	M2.5/0.4		
工作温度	Operating temperature[℃]	-40~+105		
焊锡温度	Soldering temperature	260℃ /5S		
引针尺寸	Pin dimensions [mm]	0.5*0.9		
PCB板孔径	PCB Hole Diameter [mm]	∅1.3		

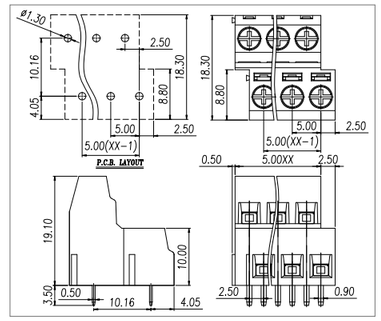

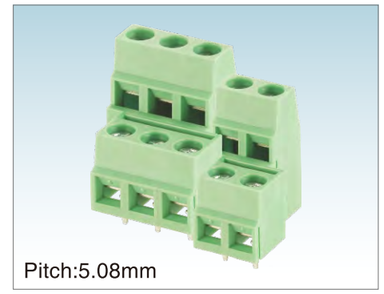

Pitch:5.08mm

WJA508-5.08

UL/CUL 技术参数 UL/CUL Technical Data				
等级	Use Group	B	C	D
额定电压	Rated Voltage [V]	300	-	300
额定电流	Rated Current [A]	12	-	10
接线范围 Wire Range	单芯线 Solid [AWG]	26~14		
	多芯线 Stranded [AWG]	26~14		
耐电压	Dielectric Voltage-Withstand	1.6KV		
IEC 技术参数 IEC Technical Data				
过电压类别	Overvoltage Category	Ⅲ	Ⅲ	Ⅱ
污染等级	Contamination Class	3	2	2
额定电压	Rated Voltage [V]	160	250	400
额定电流	Rated Current [A]	17.5	17.5	17.5
额定冲击电压	Impulse withstand voltage [KV]	4	4	4
导线截面积 Conductor cross section	硬质导线 Solid[mm²]	0.5~1.5		
	柔性导线 Flexible[mm²]	0.5~1.5		
材料 Material				
绝缘材料	Insulation Material	PA66		
阻燃等级	Flame retardant rating	UL94V-0		
导体材料	Conductor Material	Copper alloy		
导体表面镀层	Plating of conductor surface	Sn plated		
一般参数 Other Data				
间距/极数	Pitch/Poles [mm]/[P]	5.08/2*2~2*30		
剥线长度	Stripping Length [mm]	5~6		
螺丝/扭矩	Screw/Torque(Max)[N.m]	M3/0.5		
工作温度	Operating temperature[℃]	-40~+105		
焊锡温度	Soldering temperature	260℃ /5S		
引针尺寸	Pin dimensions [mm]	0.5*0.9		
PCB板孔径	PCB Hole Diameter [mm]	∅1.3		

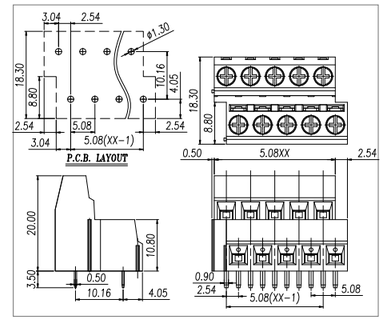

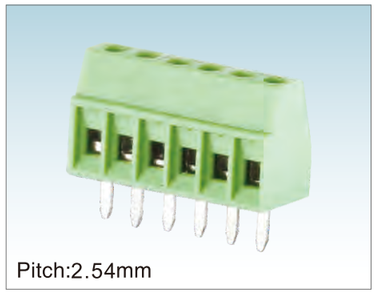

Pitch:2.54mm

WJEK254-2.54

UL/CUL 技术参数 UL/CUL Technical Data				
等级	Use Group	B	C	D
额定电压	Rated Voltage [V]	150	-	-
额定电流	Rated Current [A]	7	-	-
接线范围 Wire Range	单芯线 Solid [AWG]	26~18		
	多芯线 Stranded [AWG]	26~18		
耐电压	Dielectric Voltage-Withstand	1.3KV		
IEC 技术参数 IEC Technical Data				
过电压类别	Overvoltage Category	Ⅲ	Ⅲ	Ⅱ
污染等级	Contamination Class	3	2	2
额定电压	Rated Voltage [V]	63	130	320
额定电流	Rated Current [A]	8	8	8
额定冲击电压	Impulse withstand voltage [KV]	1.5	1.5	2.5
导线截面积 Conductor cross section	硬质导线 Solid[mm²]	0.5~1.0		
	柔性导线 Flexible[mm²]	0.5~1.0		
材料 Material				
绝缘材料	Insulation Material	PA66		
阻燃等级	Flame retardant rating	UL94V-0		
导体材料	Conductor Material	Copper alloy		
导体表面镀层	Plating of conductor surface	Sn plated		
一般参数 Other Data				
间距/极数	Pitch/Poles [mm]/[P]	2.54/2~24		
剥线长度	Stripping Length [mm]	4~5		
螺丝/扭矩	Screw/Torque(Max)[N.m]	M1.6/0.1		
工作温度	Operating temperature[℃]	-40~+105		
焊锡温度	Soldering temperature	260℃ /5S		
引针尺寸	Pin dimensions [mm]	0.5*0.8		
PCB板孔径	PCB Hole Diameter [mm]	∅1.0		

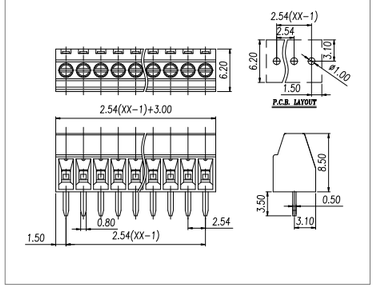

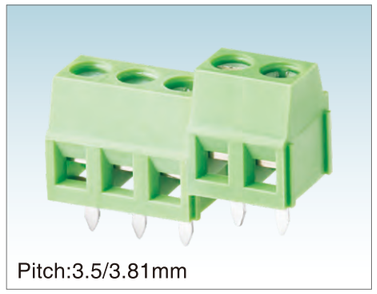

Pitch:3.5/3.81mm

WJEK350-3.5/WJEK381-3.81

UL/CUL 技术参数 UL/CUL Technical Data				
等级	Use Group	B	C	D
额定电压	Rated Voltage [V]	300	-	300
额定电流	Rated Current [A]	10	-	10
接线范围 Wire Range	单芯线 Solid [AWG]	28~16		
	多芯线 Stranded [AWG]	28~16		
耐电压	Dielectric Voltage-Withstand	1.6KV		
IEC 技术参数 IEC Technical Data				
过电压类别	Overvoltage Category	Ⅲ	Ⅲ	Ⅱ
污染等级	Contamination Class	3	2	2
额定电压	Rated Voltage [V]	160	200	400
额定电流	Rated Current [A]	13.5	13.5	13.5
额定冲击电压	Impulse withstand voltage [KV]	2.5	2.5	2.5
导线截面积 Conductor cross section	硬质导线 Solid[mm²]	0.5~1.0		
	柔性导线 Flexible[mm²]	0.5~1.0		
材料 Material				
绝缘材料	Insulation Material	PA66		
阻燃等级	Flame retardant rating	UL94V-0		
导体材料	Conductor Material	Copper alloy		
导体表面镀层	Plating of conductor surface	Sn plated		
一般参数 Other Data				
间距/极数	Pitch/Poles [mm]/[P]	3.5,3.81/2~24		
剥线长度	Stripping Length [mm]	4~5		
螺丝/扭矩	Screw/Torque(Max)[N.m]	M2/0.2		
工作温度	Operating temperature[℃]	-40~+105		
焊锡温度	Soldering temperature	260℃ /5S		
引针尺寸	Pin dimensions [mm]	0.5*0.9		
PCB板孔径	PCB Hole Diameter [mm]	∅1.3		

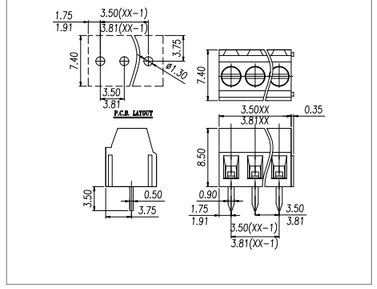



Pitch:3.5/3.81mm

WJEEK350-3.5/WJEEK381-3.81

UL/CUL 技术参数 UL/CUL Technical Data				
等级	Use Group	B	C	D
额定电压	Rated Voltage [V]	300	-	300
额定电流	Rated Current [A]	10	-	10
接线范围 Wire Range	单芯线 Solid [AWG]	28~16		
	多芯线 Stranded [AWG]	28~16		
耐电压	Dielectric Voltage-Withstand	1.6KV		
IEC 技术参数 IEC Technical Data				
过电压类别	Overvoltage Category	Ⅲ	Ⅲ	Ⅱ
污染等级	Contamination Class	3	2	2
额定电压	Rated Voltage [V]	160	200	400
额定电流	Rated Current [A]	13.5	13.5	13.5
额定冲击电压	Impulse withstand voltage [KV]	2.5	2.5	2.5
导线截面积 Conductor cross section	硬质导线 Solid[mm²]	0.5~1.0		
	柔性导线 Flexible[mm²]	0.5~1.0		
材料 Material				
绝缘材料	Insulation Material	PA66		
阻燃等级	Flame retardant rating	UL94V-0		
导体材料	Conductor Material	Copper alloy		
导体表面镀层	Plating of conductor surface	Sn plated		
一般参数 Other Data				
间距/极数	Pitch/Poles [mm]/[P]	3.5,3.81/2~24		
剥线长度	Stripping Length [mm]	4~5		
螺丝/扭矩	Screw/Torque(Max)[N.m]	M2/0.2		
工作温度	Operating temperature[℃]	-40~+105		
焊锡温度	Soldering temperature	260℃ /5S		
引针尺寸	Pin dimensions [mm]	0.5*0.9		
PCB板孔径	PCB Hole Diameter [mm]	∅1.3		

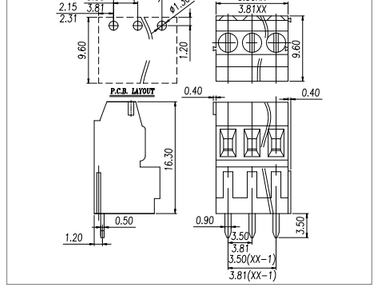

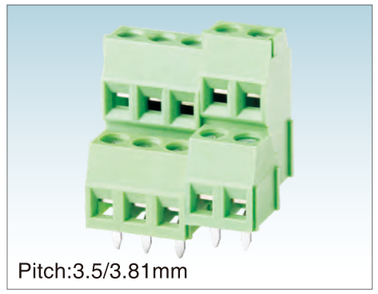

Pitch:3.5/3.81mm

WJEK350A-3.5/WJEK381A-3.81

UL/CUL 技术参数 UL/CUL Technical Data				
等级	Use Group	B	C	D
额定电压	Rated Voltage [V]	300	-	300
额定电流	Rated Current [A]	10	-	10
接线范围 Wire Range	单芯线 Solid [AWG]	28~16		
	多芯线 Stranded [AWG]	28~16		
耐电压	Dielectric Voltage-Withstand	1.6KV		
IEC 技术参数 IEC Technical Data				
过电压类别	Overvoltage Category	Ⅲ	Ⅲ	Ⅱ
污染等级	Contamination Class	3	2	2
额定电压	Rated Voltage [V]	160	200	400
额定电流	Rated Current [A]	13.5	13.5	13.5
额定冲击电压	Impulse withstand voltage [KV]	2.5	2.5	2.5
导线截面积 Conductor cross section	硬质导线 Solid[mm²]	0.5~1.0		
	柔性导线 Flexible[mm²]	0.5~1.0		
材料 Material				
绝缘材料	Insulation Material	PA66		
阻燃等级	Flame retardant rating	UL94V-0		
导体材料	Conductor Material	Copper alloy		
导体表面镀层	Plating of conductor surface	Sn plated		
一般参数 Other Data				
间距/极数	Pitch/Poles [mm]/[P]	3.5,3.81/2*2~2*24		
剥线长度	Stripping Length [mm]	4~5		
螺丝/扭矩	Screw/Torque(Max)[N.m]	M2/0.2		
工作温度	Operating temperature[℃]	-40~+105		
焊锡温度	Soldering temperature	260℃ /5S		
引针尺寸	Pin dimensions [mm]	0.5*0.9		
PCB板孔径	PCB Hole Diameter [mm]	∅1.3		

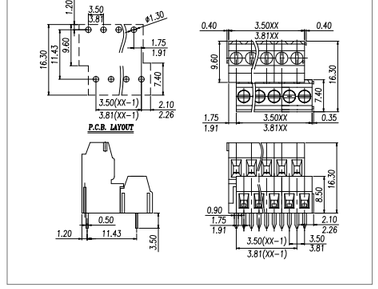

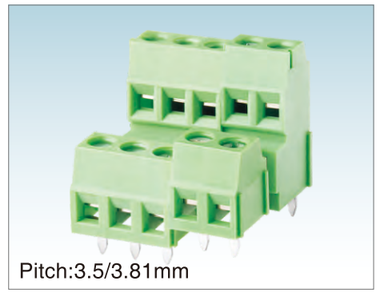

Pitch:3.5/3.81mm

WJEK350B-3.5/WJEK381B-3.81

UL/CUL 技术参数 UL/CUL Technical Data				
等级	Use Group	B	C	D
额定电压	Rated Voltage [V]	300	-	300
额定电流	Rated Current [A]	10	-	10
接线范围 Wire Range	单芯线 Solid [AWG]	28~16		
	多芯线 Stranded [AWG]	28~16		
耐电压	Dielectric Voltage-Withstand	1.6KV		
IEC 技术参数 IEC Technical Data				
过电压类别	Overvoltage Category	Ⅲ	Ⅲ	Ⅱ
污染等级	Contamination Class	3	2	2
额定电压	Rated Voltage [V]	160	200	400
额定电流	Rated Current [A]	13.5	13.5	13.5
额定冲击电压	Impulse withstand voltage [KV]	2.5	2.5	2.5
导线截面积 Conductor cross section	硬质导线 Solid[mm²]	0.5~1.0		
	柔性导线 Flexible[mm²]	0.5~1.0		
材料 Material				
绝缘材料	Insulation Material	PA66		
阻燃等级	Flame retardant rating	UL94V-0		
导体材料	Conductor Material	Copper alloy		
导体表面镀层	Plating of conductor surface	Sn plated		
一般参数 Other Data				
间距/极数	Pitch/Poles [mm]/[P]	3.5,3.81/2*2~2*24		
剥线长度	Stripping Length [mm]	4~5		
螺丝/扭矩	Screw/Torque(Max)[N.m]	M2/0.2		
工作温度	Operating temperature[℃]	-40~+105		
焊锡温度	Soldering temperature	260℃ /5S		
引针尺寸	Pin dimensions [mm]	0.5*0.9		
PCB板孔径	PCB Hole Diameter [mm]	∅1.3		

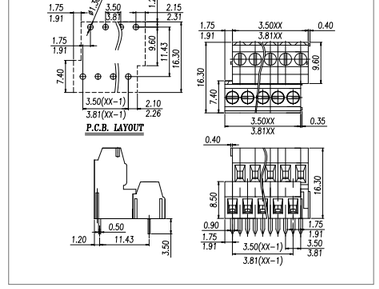

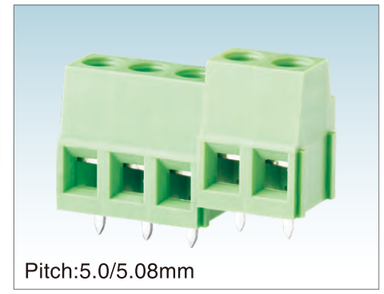

Pitch:5.0/5.08mm

WJEK500-5.0/WJEK508-5.08

UL/CUL 技术参数 UL/CUL Technical Data				
等级	Use Group	B	C	D
额定电压	Rated Voltage [V]	300	-	300
额定电流	Rated Current [A]	15	-	10
接线范围 Wire Range	单芯线 Solid [AWG]	30~14		
	多芯线 Stranded [AWG]	30~14		
耐电压	Dielectric Voltage-Withstand	1.6KV		
IEC 技术参数 IEC Technical Data				
过电压类别	Overvoltage Category	Ⅲ	Ⅲ	Ⅱ
污染等级	Contamination Class	3	2	2
额定电压	Rated Voltage [V]	250	400	630
额定电流	Rated Current [A]	24	24	24
额定冲击电压	Impulse withstand voltage [KV]	4	4	4
导线截面积 Conductor cross section	硬质导线 Solid[mm²]	0.5~2.5		
	柔性导线 Flexible[mm²]	0.5~2.5		
材料 Material				
绝缘材料	Insulation Material	PA66		
阻燃等级	Flame retardant rating	UL94V-0		
导体材料	Conductor Material	Copper alloy		
导体表面镀层	Plating of conductor surface	Sn plated		
一般参数 Other Data				
间距/极数	Pitch/Poles [mm]/[P]	5.0,5.08/2~24		
剥线长度	Stripping Length [mm]	6~7		
螺丝/扭矩	Screw/Torque(Max)[N.m]	M2.5/0.4		
工作温度	Operating temperature[℃]	-40~+105		
焊锡温度	Soldering temperature	260℃ /5S		
引针尺寸	Pin dimensions [mm]	0.8*0.9		
PCB板孔径	PCB Hole Diameter [mm]	∅1.5		

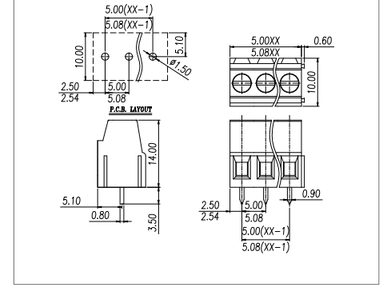



Pitch:5.0/5.08mm

WJEEK500-5.0/WJEEK508-5.08

UL/CUL 技术参数 UL/CUL Technical Data				
等级	Use Group	B	C	D
额定电压	Rated Voltage [V]	300	-	300
额定电流	Rated Current [A]	15	-	10
接线范围 Wire Range	单芯线 Solid [AWG]	30~14		
	多芯线 Stranded [AWG]	30~14		
耐电压	Dielectric Voltage-Withstand	1.6KV		
IEC 技术参数 IEC Technical Data				
过电压类别	Overvoltage Category	Ⅲ	Ⅲ	Ⅱ
污染等级	Contamination Class	3	2	2
额定电压	Rated Voltage [V]	250	400	630
额定电流	Rated Current [A]	24	24	24
额定冲击电压	Impulse withstand voltage [KV]	4	4	4
导线截面积 Conductor cross section	硬质导线 Solid[mm²]	0.5~2.5		
	柔性导线 Flexible[mm²]	0.5~2.5		
材料 Material				
绝缘材料	Insulation Material	PA66		
阻燃等级	Flame retardant rating	UL94V-0		
导体材料	Conductor Material	Copper alloy		
导体表面镀层	Plating of conductor surface	Sn plated		
一般参数 Other Data				
间距/极数	Pitch/Poles [mm]/[P]	5.0,5.08/2~24		
剥线长度	Stripping Length [mm]	6~7		
螺丝/扭矩	Screw/Torque(Max)[N.m]	M2.5/0.4		
工作温度	Operating temperature[℃]	-40~+105		
焊锡温度	Soldering temperature	260℃ /5S		
引针尺寸	Pin dimensions [mm]	0.8*0.9		
PCB板孔径	PCB Hole Diameter [mm]	∅1.5		

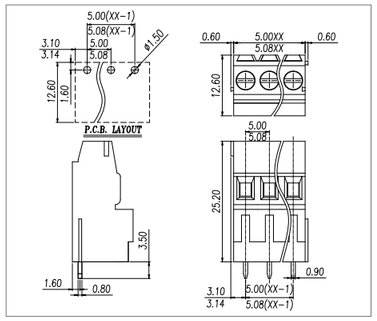



Pitch:5.0/5.08mm

WJE3K500-5.0/WJE3K508-5.08

UL/CUL 技术参数 UL/CUL Technical Data				
等级	Use Group	B	C	D
额定电压	Rated Voltage [V]	300	-	300
额定电流	Rated Current [A]	15	-	10
接线范围 Wire Range	单芯线 Solid [AWG]	30~14		
	多芯线 Stranded [AWG]	30~14		
耐电压	Dielectric Voltage-Withstand	1.6KV		
IEC 技术参数 IEC Technical Data				
过电压类别	Overvoltage Category	Ⅲ	Ⅲ	Ⅱ
污染等级	Contamination Class	3	2	2
额定电压	Rated Voltage [V]	250	400	630
额定电流	Rated Current [A]	24	24	24
额定冲击电压	Impulse withstand voltage [KV]	4	4	4
导线截面积 Conductor cross section	硬质导线 Solid[mm²]	0.5~2.5		
	柔性导线 Flexible[mm²]	0.5~2.5		
材料 Material				
绝缘材料	Insulation Material	PA66		
阻燃等级	Flame retardant rating	UL94V-0		
导体材料	Conductor Material	Copper alloy		
导体表面镀层	Plating of conductor surface	Sn plated		
一般参数 Other Data				
间距/极数	Pitch/Poles [mm]/[P]	5.0,5.08/2~24		
剥线长度	Stripping Length [mm]	6~7		
螺丝/扭矩	Screw/Torque(Max)[N.m]	M2.5/0.4		
工作温度	Operating temperature[℃]	-40~+105		
焊锡温度	Soldering temperature	260℃ /5S		
引针尺寸	Pin dimensions [mm]	0.8*0.9		
PCB板孔径	PCB Hole Diameter [mm]	∅1.5		

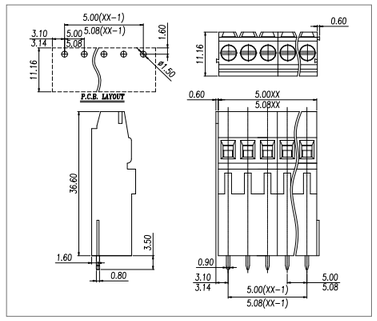



Pitch:5.0/5.08mm

WJEK500A-5.0/WJEK508A-5.08

UL/CUL 技术参数 UL/CUL Technical Data				
等级	Use Group	B	C	D
额定电压	Rated Voltage [V]	300	-	300
额定电流	Rated Current [A]	15	-	10
接线范围 Wire Range	单芯线 Solid [AWG]	30~14		
	多芯线 Stranded [AWG]	30~14		
耐电压	Dielectric Voltage-Withstand	1.6KV		
IEC 技术参数 IEC Technical Data				
过电压类别	Overvoltage Category	Ⅲ	Ⅲ	Ⅱ
污染等级	Contamination Class	3	2	2
额定电压	Rated Voltage [V]	250	400	630
额定电流	Rated Current [A]	24	24	24
额定冲击电压	Impulse withstand voltage [KV]	4	4	4
导线截面积 Conductor cross section	硬质导线 Solid[mm²]	0.5~2.5		
	柔性导线 Flexible[mm²]	0.5~2.5		
材料 Material				
绝缘材料	Insulation Material	PA66		
阻燃等级	Flame retardant rating	UL94V-0		
导体材料	Conductor Material	Copper alloy		
导体表面镀层	Plating of conductor surface	Sn plated		
一般参数 Other Data				
间距/极数	Pitch/Poles [mm]/[P]	5.0,5.08/ 2*2~2*24		
剥线长度	Stripping Length [mm]	6~7		
螺丝/扭矩	Screw/Torque(Max)[N.m]	M2.5/0.4		
工作温度	Operating temperature[℃]	-40~+105		
焊锡温度	Soldering temperature	260℃ /5S		
引针尺寸	Pin dimensions [mm]	0.8*0.9		
PCB板孔径	PCB Hole Diameter [mm]	∅1.5		

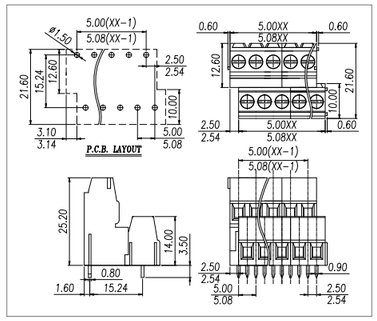



Pitch:5.08mm

WJEK508A-5.08-1000A

UL/CUL 技术参数 UL/CUL Technical Data				
等级	Use Group	B	C	D
额定电压	Rated Voltage [V]	300	-	300
额定电流	Rated Current [A]	15	-	10
接线范围 Wire Range	单芯线 Solid [AWG]	30~14		
	多芯线 Stranded [AWG]	30~14		
耐电压	Dielectric Voltage-Withstand	1.6KV		
IEC 技术参数 IEC Technical Data				
过电压类别	Overvoltage Category	Ⅲ	Ⅲ	Ⅱ
污染等级	Contamination Class	3	2	2
额定电压	Rated Voltage [V]	250	400	630
额定电流	Rated Current [A]	24	24	24
额定冲击电压	Impulse withstand voltage [KV]	4	4	4
导线截面积 Conductor cross section	硬质导线 Solid[mm²]	0.5~2.5		
	柔性导线 Flexible[mm²]	0.5~2.5		
材料 Material				
绝缘材料	Insulation Material	PA66		
阻燃等级	Flame retardant rating	UL94V-0		
导体材料	Conductor Material	Copper alloy		
导体表面镀层	Plating of conductor surface	Sn plated		
一般参数 Other Data				
间距/极数	Pitch/Poles [mm]/[P]	5.08/2*2~2*24		
剥线长度	Stripping Length [mm]	6-7		
螺丝/扭矩	Screw/Torque(Max)[N.m]	M3/0.5		
工作温度	Operating temperature[℃]	-40~+105		
焊锡温度	Soldering temperature	260℃ /5S		
引针尺寸	Pin dimensions [mm]	0.8*0.9		
PCB板孔径	PCB Hole Diameter [mm]	∅1.5		

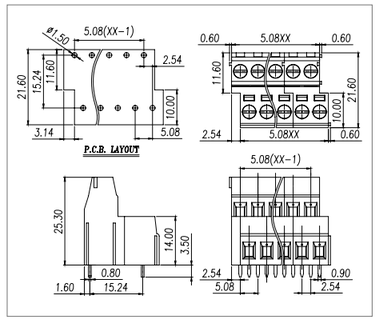



Pitch:5.0/5.08mm

WJEK500B-5.0/WJEK508B-5.08

UL/CUL 技术参数 UL/CUL Technical Data				
等级	Use Group	B	C	D
额定电压	Rated Voltage [V]	300	-	300
额定电流	Rated Current [A]	15	-	10
接线范围 Wire Range	单芯线 Solid [AWG]	30~14		
	多芯线 Stranded [AWG]	30~14		
耐电压	Dielectric Voltage-Withstand	1.6KV		
IEC 技术参数 IEC Technical Data				
过电压类别	Overvoltage Category	Ⅲ	Ⅲ	Ⅱ
污染等级	Contamination Class	3	2	2
额定电压	Rated Voltage [V]	250	400	630
额定电流	Rated Current [A]	24	24	24
额定冲击电压	Impulse withstand voltage [KV]	4	4	4
导线截面积 Conductor cross section	硬质导线 Solid[mm²]	0.5~2.5		
	柔性导线 Flexible[mm²]	0.5~2.5		
材料 Material				
绝缘材料	Insulation Material	PA66		
阻燃等级	Flame retardant rating	UL94V-0		
导体材料	Conductor Material	Copper alloy		
导体表面镀层	Plating of conductor surface	Sn plated		
一般参数 Other Data				
间距/极数	Pitch/Poles [mm]/[P]	5.0,5.08/ 2*2~2*24		
剥线长度	Stripping Length [mm]	6-7		
螺丝/扭矩	Screw/Torque(Max)[N.m]	M2.5/0.4		
工作温度	Operating temperature[℃]	-40~+105		
焊锡温度	Soldering temperature	260℃ /5S		
引针尺寸	Pin dimensions [mm]	0.8*0.9		
PCB板孔径	PCB Hole Diameter [mm]	∅1.5		

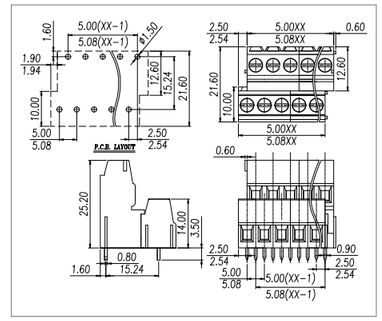



Pitch:5.0/5.08mm

WJE2K500A-5.0/WJE2K508A-5.08

UL/CUL 技术参数 UL/CUL Technical Data				
等级	Use Group	B	C	D
额定电压	Rated Voltage [V]	300	-	300
额定电流	Rated Current [A]	15	-	10
接线范围 Wire Range	单芯线 Solid [AWG]	30~14		
	多芯线 Stranded [AWG]	30~14		
耐电压	Dielectric Voltage-Withstand	1.6KV		
IEC 技术参数 IEC Technical Data				
过电压类别	Overvoltage Category	Ⅲ	Ⅲ	Ⅱ
污染等级	Contamination Class	3	2	2
额定电压	Rated Voltage [V]	250	400	630
额定电流	Rated Current [A]	24	24	24
额定冲击电压	Impulse withstand voltage [KV]	4	4	4
导线截面积 Conductor cross section	硬质导线 Solid[mm²]	0.5~2.5		
	柔性导线 Flexible[mm²]	0.5~2.5		
材料 Material				
绝缘材料	Insulation Material	PA66		
阻燃等级	Flame retardant rating	UL94V-0		
导体材料	Conductor Material	Copper alloy		
导体表面镀层	Plating of conductor surface	Sn plated		
一般参数 Other Data				
间距/极数	Pitch/Poles [mm]/[P]	5.0,5.08/ 2*2~2*24		
剥线长度	Stripping Length [mm]	6-7		
螺丝/扭矩	Screw/Torque(Max)[N.m]	M2.5/0.4		
工作温度	Operating temperature[℃]	-40~+105		
焊锡温度	Soldering temperature	260℃ /5S		
引针尺寸	Pin dimensions [mm]	0.8*0.9		
PCB板孔径	PCB Hole Diameter [mm]	∅1.5		

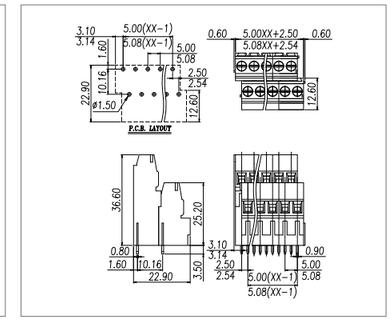



Pitch:5.0/5.08mm

WJE2K500B-5.0/WJE2K508B-5.08

UL/CUL 技术参数 UL/CUL Technical Data				
等级	Use Group	B	C	D
额定电压	Rated Voltage [V]	300	-	300
额定电流	Rated Current [A]	15	-	10
接线范围 Wire Range	单芯线 Solid [AWG]	30~14		
	多芯线 Stranded [AWG]	30~14		
耐电压	Dielectric Voltage-Withstand	1.6KV		
IEC 技术参数 IEC Technical Data				
过电压类别	Overvoltage Category	Ⅲ	Ⅲ	Ⅱ
污染等级	Contamination Class	3	2	2
额定电压	Rated Voltage [V]	250	400	630
额定电流	Rated Current [A]	24	24	24
额定冲击电压	Impulse withstand voltage [KV]	4	4	4
导线截面积 Conductor cross section	硬质导线 Solid[mm²]	0.5~2.5		
	柔性导线 Flexible[mm²]	0.5~2.5		
材料 Material				
绝缘材料	Insulation Material	PA66		
阻燃等级	Flame retardant rating	UL94V-0		
导体材料	Conductor Material	Copper alloy		
导体表面镀层	Plating of conductor surface	Sn plated		
一般参数 Other Data				
间距/极数	Pitch/Poles [mm]/[P]	5.0,5.08/ 2*2~2*24		
剥线长度	Stripping Length [mm]	6~7		
螺丝/扭矩	Screw/Torque(Max)[N.m]	M2.5/0.4		
工作温度	Operating temperature[℃]	-40~+105		
焊锡温度	Soldering temperature	260℃ /5S		
引针尺寸	Pin dimensions [mm]	0.8*0.9		
PCB板孔径	PCB Hole Diameter [mm]	∅1.5		

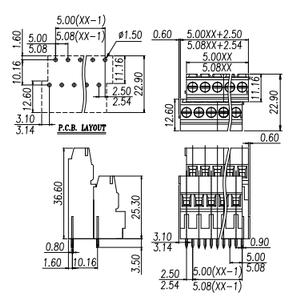

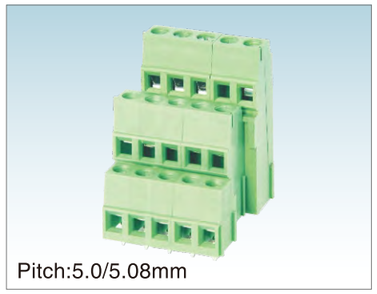

Pitch:5.0/5.08mm

WJE3K500A-5.0/WJE3K508A-5.08

UL/CUL 技术参数 UL/CUL Technical Data				
等级	Use Group	B	C	D
额定电压	Rated Voltage [V]	300	-	300
额定电流	Rated Current [A]	15	-	10
接线范围 Wire Range	单芯线 Solid [AWG]	30~14		
	多芯线 Stranded [AWG]	30~14		
耐电压	Dielectric Voltage-Withstand	1.6KV		
IEC 技术参数 IEC Technical Data				
过电压类别	Overvoltage Category	Ⅲ	Ⅲ	Ⅱ
污染等级	Contamination Class	3	2	2
额定电压	Rated Voltage [V]	250	400	630
额定电流	Rated Current [A]	18	18	18
额定冲击电压	Impulse withstand voltage [KV]	4	4	4
导线截面积 Conductor cross section	硬质导线 Solid[mm²]	0.5~2.5		
	柔性导线 Flexible[mm²]	0.5~2.5		
材料 Material				
绝缘材料	Insulation Material	PA66		
阻燃等级	Flame retardant rating	UL94V-0		
导体材料	Conductor Material	Copper alloy		
导体表面镀层	Plating of conductor surface	Sn plated		
一般参数 Other Data				
间距/极数	Pitch/Poles [mm]/[P]	5.0,5.08/ 3*2~3*24		
剥线长度	Stripping Length [mm]	6~7		
螺丝/扭矩	Screw/Torque(Max)[N.m]	M2.5/0.4		
工作温度	Operating temperature[℃]	-40~+105		
焊锡温度	Soldering temperature	260℃ /5S		
引针尺寸	Pin dimensions [mm]	0.8*0.9		
PCB板孔径	PCB Hole Diameter [mm]	∅1.5		

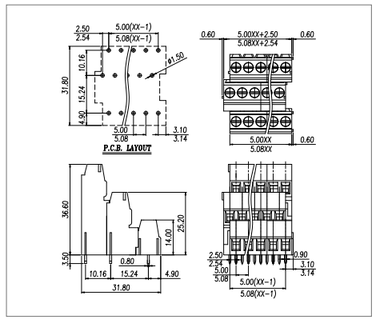

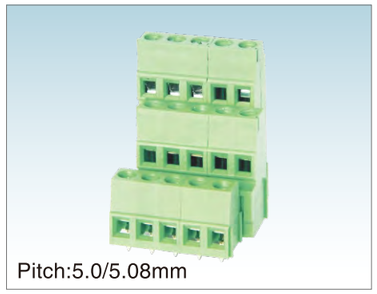

Pitch:5.0/5.08mm

WJE3K500B-5.0/WJE3K508B-5.08

UL/CUL 技术参数 UL/CUL Technical Data				
等级	Use Group	B	C	D
额定电压	Rated Voltage [V]	300	-	300
额定电流	Rated Current [A]	15	-	10
接线范围 Wire Range	单芯线 Solid [AWG]	30~14		
	多芯线 Stranded [AWG]	30~14		
耐电压	Dielectric Voltage-Withstand	1.6KV		
IEC 技术参数 IEC Technical Data				
过电压类别	Overvoltage Category	Ⅲ	Ⅲ	Ⅱ
污染等级	Contamination Class	3	2	2
额定电压	Rated Voltage [V]	250	400	630
额定电流	Rated Current [A]	18	18	18
额定冲击电压	Impulse withstand voltage [KV]	4	4	4
导线截面积 Conductor cross section	硬质导线 Solid[mm²]	0.5~2.5		
	柔性导线 Flexible[mm²]	0.5~2.5		
材料 Material				
绝缘材料	Insulation Material	PA66		
阻燃等级	Flame retardant rating	UL94V-0		
导体材料	Conductor Material	Copper alloy		
导体表面镀层	Plating of conductor surface	Sn plated		
一般参数 Other Data				
间距/极数	Pitch/Poles [mm]/[P]	5.0,5.08/ 3*2~3*24		
剥线长度	Stripping Length [mm]	6-7		
螺丝/扭矩	Screw/Torque(Max)[N.m]	M2.5/0.4		
工作温度	Operating temperature[℃]	-40~+105		
焊锡温度	Soldering temperature	260℃ /5S		
引针尺寸	Pin dimensions [mm]	0.8*0.9		
PCB板孔径	PCB Hole Diameter [mm]	∅1.5		

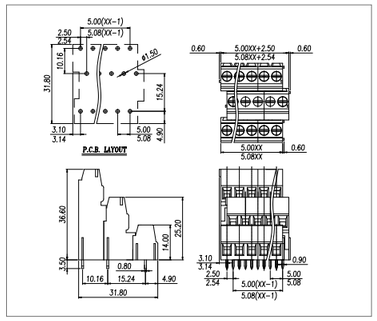



Pitch:5.0mm

WJ105R-5.0

UL/CUL 技术参数 UL/CUL Technical Data				
等级	Use Group	B	C	D
额定电压	Rated Voltage [V]	300	-	300
额定电流	Rated Current [A]	20	-	10
接线范围 Wire Range	单芯线 Solid [AWG]	26~12		
	多芯线 Stranded [AWG]	26~12		
耐电压	Dielectric Voltage-Withstand	1.6KV		
IEC 技术参数 IEC Technical Data				
过电压类别	Overvoltage Category	Ⅲ	Ⅲ	Ⅱ
污染等级	Contamination Class	3	2	2
额定电压	Rated Voltage [V]	250	400	630
额定电流	Rated Current [A]	24	24	24
额定冲击电压	Impulse withstand voltage [KV]	4	4	4
导线截面积 Conductor cross section	硬质导线 Solid[mm²]	0.5~2.5		
	柔性导线 Flexible[mm²]	0.5~2.5		
材料 Material				
绝缘材料	Insulation Material	PA66		
阻燃等级	Flame retardant rating	UL94V-0		
导体材料	Conductor Material	Copper alloy		
导体表面镀层	Plating of conductor surface	Sn plated		
一般参数 Other Data				
间距/极数	Pitch/Poles [mm]/[P]	5.0/1~30		
剥线长度	Stripping Length [mm]	12~13		
螺丝/扭矩	Screw/Torque(Max)[N.m]	M2.5/0.4		
工作温度	Operating temperature[℃]	-40~+105		
焊锡温度	Soldering temperature	260℃ /5S		
引针尺寸	Pin dimensions [mm]	0.8*0.8		
PCB板孔径	PCB Hole Diameter [mm]	∅1.4		

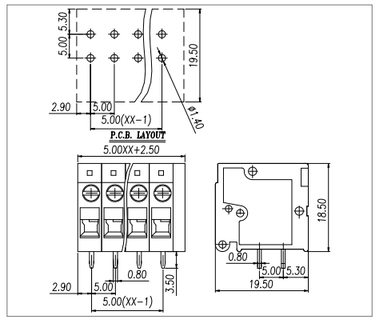



Pitch:5.0mm

WJ105V-5.0

UL/CUL 技术参数 UL/CUL Technical Data				
等级	Use Group	B	C	D
额定电压	Rated Voltage [V]	300	-	300
额定电流	Rated Current [A]	20	-	10
接线范围 Wire Range	单芯线 Solid [AWG]	26~12		
	多芯线 Stranded [AWG]	26~12		
耐电压	Dielectric Voltage-Withstand	1.6KV		
IEC 技术参数 IEC Technical Data				
过电压类别	Overvoltage Category	Ⅲ	Ⅲ	Ⅱ
污染等级	Contamination Class	3	2	2
额定电压	Rated Voltage [V]	250	400	630
额定电流	Rated Current [A]	24	24	24
额定冲击电压	Impulse withstand voltage [KV]	4	4	4
导线截面积 Conductor cross section	硬质导线 Solid[mm²]	0.5~2.5		
	柔性导线 Flexible[mm²]	0.5~2.5		
材料 Material				
绝缘材料	Insulation Material	PA66		
阻燃等级	Flame retardant rating	UL94V-0		
导体材料	Conductor Material	Copper alloy		
导体表面镀层	Plating of conductor surface	Sn plated		
一般参数 Other Data				
间距/极数	Pitch/Poles [mm]/[P]	5.0/1~30		
剥线长度	Stripping Length [mm]	12~13		
螺丝/扭矩	Screw/Torque(Max)[N.m]	M2.5/0.4		
工作温度	Operating temperature[℃]	-40~+105		
焊锡温度	Soldering temperature	260℃ /5S		
引针尺寸	Pin dimensions [mm]	0.8*0.8		
PCB板孔径	PCB Hole Diameter [mm]	∅1.4		

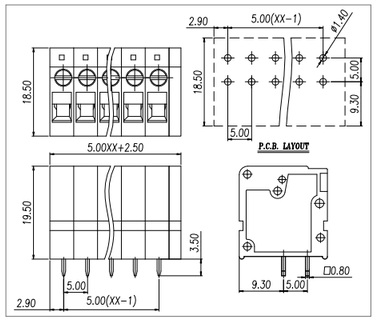

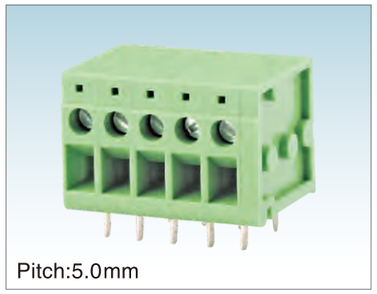

Pitch:5.0mm

WJ105RA-5.0

UL/CUL 技术参数 UL/CUL Technical Data				
等级	Use Group	B	C	D
额定电压	Rated Voltage [V]	300	-	300
额定电流	Rated Current [A]	20	-	10
接线范围 Wire Range	单芯线 Solid [AWG]	26~12		
	多芯线 Stranded [AWG]	26~12		
耐电压	Dielectric Voltage-Withstand	1.6KV		
IEC 技术参数 IEC Technical Data				
过电压类别	Overvoltage Category	Ⅲ	Ⅲ	Ⅱ
污染等级	Contamination Class	3	2	2
额定电压	Rated Voltage [V]	250	400	630
额定电流	Rated Current [A]	24	24	24
额定冲击电压	Impulse withstand voltage [KV]	4	4	4
导线截面积 Conductor cross section	硬质导线 Solid[mm²]	0.5~2.5		
	柔性导线 Flexible[mm²]	0.5~2.5		
材料 Material				
绝缘材料	Insulation Material	PA66		
阻燃等级	Flame retardant rating	UL94V-0		
导体材料	Conductor Material	Copper alloy		
导体表面镀层	Plating of conductor surface	Sn plated		
一般参数 Other Data				
间距/极数	Pitch/Poles [mm]/[P]	5.0/1~30		
剥线长度	Stripping Length [mm]	9		
螺丝/扭矩	Screw/Torque(Max)[N.m]	M2.5/0.4		
工作温度	Operating temperature[℃]	-40~+105		
焊锡温度	Soldering temperature	260℃ /5S		
引针尺寸	Pin dimensions [mm]	0.8*0.8		
PCB板孔径	PCB Hole Diameter [mm]	∅1.4		

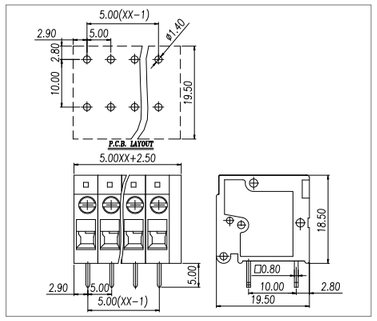



Pitch:5.0mm

WJ105VA-5.0

UL/CUL 技术参数 UL/CUL Technical Data				
等级	Use Group	B	C	D
额定电压	Rated Voltage [V]	300	-	300
额定电流	Rated Current [A]	20	-	10
接线范围 Wire Range	单芯线 Solid [AWG]	26~12		
	多芯线 Stranded [AWG]	26~12		
耐电压	Dielectric Voltage-Withstand	1.6KV		

IEC 技术参数 IEC Technical Data				
过电压类别	Overvoltage Category	Ⅲ	Ⅲ	Ⅱ
污染等级	Contamination Class	3	2	2
额定电压	Rated Voltage [V]	250	400	630
额定电流	Rated Current [A]	24	24	24
额定冲击电压	Impulse withstand voltage [KV]	4	4	4
导线截面积 Conductor cross section	硬质导线 Solid[mm²]	0.5~2.5		
	柔性导线 Flexible[mm²]	0.5~2.5		

材料 Material		
绝缘材料	Insulation Material	PA66
阻燃等级	Flame retardant rating	UL94V-0
导体材料	Conductor Material	Copper alloy
导体表面镀层	Plating of conductor surface	Sn plated

一般参数 Other Data		
间距/极数	Pitch/Poles [mm]/[P]	5.0/1~30
剥线长度	Stripping Length [mm]	9
螺丝/扭矩	Screw/Torque(Max)[N.m]	M2.5/0.4
工作温度	Operating temperature[℃]	-40~+105
焊锡温度	Soldering temperature	260℃ /5S
引针尺寸	Pin dimensions [mm]	0.8*0.8
PCB板孔径	PCB Hole Diameter [mm]	∅1.4

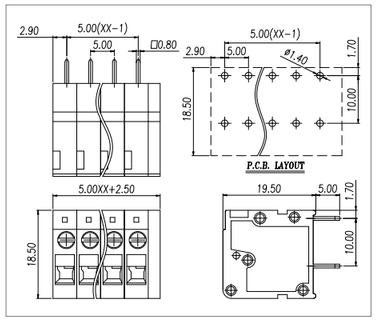



Pitch:7.5mm

WJ105R-7.5

UL/CUL 技术参数 UL/CUL Technical Data				
等级	Use Group	B	C	D
额定电压	Rated Voltage [V]	300	-	300
额定电流	Rated Current [A]	20	-	10
接线范围 Wire Range	单芯线 Solid [AWG]	26~12		
	多芯线 Stranded [AWG]	26~12		
耐电压	Dielectric Voltage-Withstand	1.6KV		

IEC 技术参数 IEC Technical Data				
过电压类别	Overvoltage Category	Ⅲ	Ⅲ	Ⅱ
污染等级	Contamination Class	3	2	2
额定电压	Rated Voltage [V]	450	630	1000
额定电流	Rated Current [A]	24	24	24
额定冲击电压	Impulse withstand voltage [KV]	6	6	6
导线截面积 Conductor cross section	硬质导线 Solid[mm²]	0.5~2.5		
	柔性导线 Flexible[mm²]	0.5~2.5		

材料 Material		
绝缘材料	Insulation Material	PA66
阻燃等级	Flame retardant rating	UL94V-0
导体材料	Conductor Material	Copper alloy
导体表面镀层	Plating of conductor surface	Sn plated

一般参数 Other Data		
间距/极数	Pitch/Poles [mm]/[P]	7.5/1~30
剥线长度	Stripping Length [mm]	12~13
螺丝/扭矩	Screw/Torque(Max)[N.m]	M2.5/0.4
工作温度	Operating temperature[℃]	-40~+105
焊锡温度	Soldering temperature	260℃ /5S
引针尺寸	Pin dimensions [mm]	0.8*0.8
PCB板孔径	PCB Hole Diameter [mm]	∅1.4

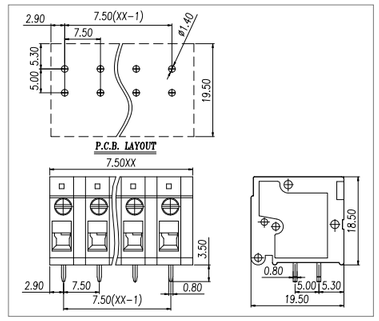



Pitch:7.5mm

WJ105V-7.5

UL/CUL 技术参数 UL/CUL Technical Data				
等级	Use Group	B	C	D
额定电压	Rated Voltage [V]	300	-	300
额定电流	Rated Current [A]	20	-	10
接线范围 Wire Range	单芯线 Solid [AWG]	26~12		
	多芯线 Stranded [AWG]	26~12		
耐电压	Dielectric Voltage-Withstand	1.6KV		

IEC 技术参数 IEC Technical Data				
过电压类别	Overvoltage Category	Ⅲ	Ⅲ	Ⅱ
污染等级	Contamination Class	3	2	2
额定电压	Rated Voltage [V]	450	630	1000
额定电流	Rated Current [A]	24	24	24
额定冲击电压	Impulse withstand voltage [KV]	6	6	6
导线截面积 Conductor cross section	硬质导线 Solid[mm²]	0.5~2.5		
	柔性导线 Flexible[mm²]	0.5~2.5		

材料 Material		
绝缘材料	Insulation Material	PA66
阻燃等级	Flame retardant rating	UL94V-0
导体材料	Conductor Material	Copper alloy
导体表面镀层	Plating of conductor surface	Sn plated

一般参数 Other Data		
间距/极数	Pitch/Poles [mm]/[P]	7.5/1~30
剥线长度	Stripping Length [mm]	12~13
螺丝/扭矩	Screw/Torque(Max)[N.m]	M2.5/0.4
工作温度	Operating temperature[℃]	-40~+105
焊锡温度	Soldering temperature	260℃ /5S
引针尺寸	Pin dimensions [mm]	0.8*0.8
PCB板孔径	PCB Hole Diameter [mm]	∅1.4

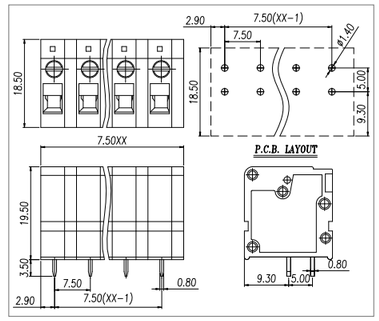



Pitch:7.5mm

WJ105RA-7.5

UL/CUL 技术参数 UL/CUL Technical Data				
等级	Use Group	B	C	D
额定电压	Rated Voltage [V]	300	-	300
额定电流	Rated Current [A]	20	-	10
接线范围 Wire Range	单芯线 Solid [AWG]	26~12		
	多芯线 Stranded [AWG]	26~12		
耐电压	Dielectric Voltage-Withstand	1.6KV		

IEC 技术参数 IEC Technical Data				
过电压类别	Overvoltage Category	Ⅲ	Ⅲ	Ⅱ
污染等级	Contamination Class	3	2	2
额定电压	Rated Voltage [V]	450	630	1000
额定电流	Rated Current [A]	24	24	24
额定冲击电压	Impulse withstand voltage [KV]	6	6	6
导线截面积 Conductor cross section	硬质导线 Solid[mm²]	0.5~2.5		
	柔性导线 Flexible[mm²]	0.5~2.5		

材料 Material		
绝缘材料	Insulation Material	PA66
阻燃等级	Flame retardant rating	UL94V-0
导体材料	Conductor Material	Copper alloy
导体表面镀层	Plating of conductor surface	Sn plated

一般参数 Other Data		
间距/极数	Pitch/Poles [mm]/[P]	7.5/1~30
剥线长度	Stripping Length [mm]	9
螺丝/扭矩	Screw/Torque(Max)[N.m]	M2.5/0.4
工作温度	Operating temperature[℃]	-40~+105
焊锡温度	Soldering temperature	260℃ /5S
引针尺寸	Pin dimensions [mm]	0.8*0.8
PCB板孔径	PCB Hole Diameter [mm]	∅1.4

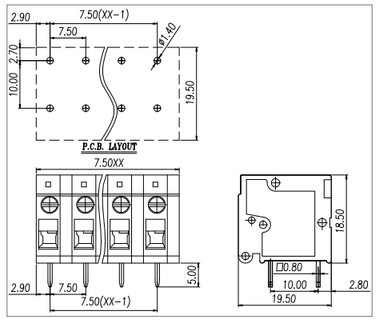



Pitch:7.5mm

WJ105VA-7.5

UL/CUL 技术参数 UL/CUL Technical Data				
等级	Use Group	B	C	D
额定电压	Rated Voltage [V]	300	-	300
额定电流	Rated Current [A]	20	-	10
接线范围 Wire Range	单芯线 Solid [AWG]	26~12		
	多芯线 Stranded [AWG]	26~12		
耐电压	Dielectric Voltage-Withstand	1.6KV		

IEC 技术参数 IEC Technical Data				
过电压类别	Overvoltage Category	Ⅲ	Ⅲ	Ⅱ
污染等级	Contamination Class	3	2	2
额定电压	Rated Voltage [V]	450	630	1000
额定电流	Rated Current [A]	24	24	24
额定冲击电压	Impulse withstand voltage [KV]	6	6	6
导线截面积 Conductor cross section	硬质导线 Solid[mm²]	0.5~2.5		
	柔性导线 Flexible[mm²]	0.5~2.5		

材料 Material		
绝缘材料	Insulation Material	PA66
阻燃等级	Flame retardant rating	UL94V-0
导体材料	Conductor Material	Copper alloy
导体表面镀层	Plating of conductor surface	Sn plated

一般参数 Other Data		
间距/极数	Pitch/Poles [mm]/[P]	7.5/1~30
剥线长度	Stripping Length [mm]	9
螺丝/扭矩	Screw/Torque(Max)[N.m]	M2.5/0.4
工作温度	Operating temperature[℃]	-40~+105
焊锡温度	Soldering temperature	260℃ /5S
引针尺寸	Pin dimensions [mm]	0.8*0.8
PCB板孔径	PCB Hole Diameter [mm]	∅1.4

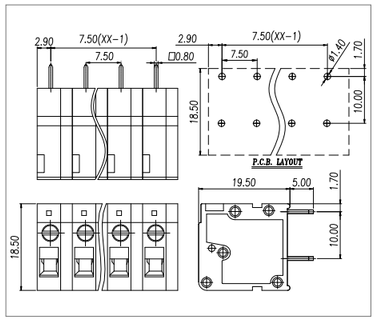

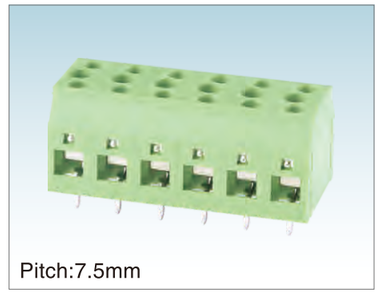

Pitch:7.5mm

WJDS4-7.5

UL/CUL 技术参数 UL/CUL Technical Data				
等级	Use Group	B	C	D
额定电压	Rated Voltage [V]	300	-	300
额定电流	Rated Current [A]	30	-	10
接线范围 Wire Range	单芯线 Solid [AWG]	24~10		
	多芯线 Stranded [AWG]	24~10		
耐电压	Dielectric Voltage-Withstand	1.6KV		

IEC 技术参数 IEC Technical Data				
过电压类别	Overvoltage Category	Ⅲ	Ⅲ	Ⅱ
污染等级	Contamination Class	3	2	2
额定电压	Rated Voltage [V]	320	320	630
额定电流	Rated Current [A]	32	32	32
额定冲击电压	Impulse withstand voltage [KV]	4	4	4
导线截面积 Conductor cross section	硬质导线 Solid[mm²]	0.5~4.0		
	柔性导线 Flexible[mm²]	0.5~4.0		

材料 Material		
绝缘材料	Insulation Material	PA66
阻燃等级	Flame retardant rating	UL94V-0
导体材料	Conductor Material	Copper alloy
导体表面镀层	Plating of conductor surface	Sn plated

一般参数 Other Data		
间距/极数	Pitch/Poles [mm]/[P]	7.5/1~30
剥线长度	Stripping Length [mm]	6~7
螺丝/扭矩	Screw/Torque(Max)[N.m]	M3/0.5
工作温度	Operating temperature[℃]	-40~+105
焊锡温度	Soldering temperature	260℃ /5S
引针尺寸	Pin dimensions [mm]	0.8*0.9
PCB板孔径	PCB Hole Diameter [mm]	∅1.4

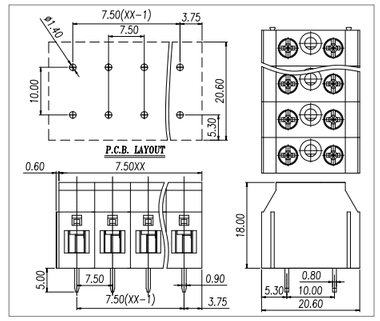

WJ331/WJ332/WJ333 产品互配选型参考表 WJ331/WJ332/WJ333 Product Matched Reference Table

Plugs \ PCB Headers	WJ332J-5.0	WJ333J-3.5
WJ331-5.0	●	
WJ332K-5.0	●	
WJ333K-3.5		●
WJ335K-3.5		●

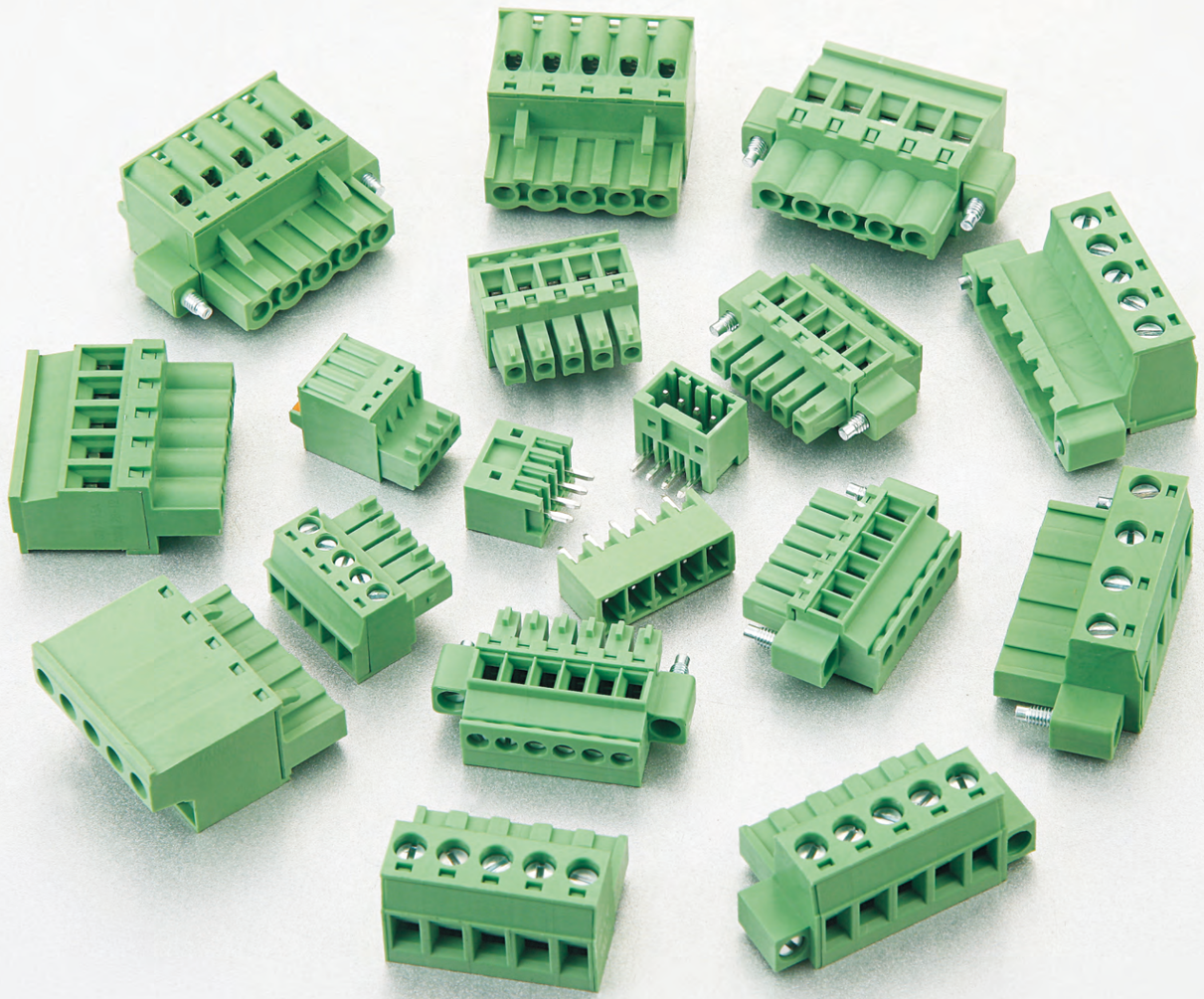

插拔式接线端子
PLUG-IN TERMINAL BLOCK

插拔式接线端子，可以连接截面为0.08mm²至16mm²的所有类型的导线，间距2.5mm至10.16mm可供选择，可根据需要选择进线方向，连接方向，插拔方向。产品设计符合IEC60998、IEC61984、UL1059、UL486E、CSA C22.2 No.158等国际标准。

Plug-in terminal blocks, provide the wire size from 0.08mm² to 16mm². Available with different pitches from 2.5mm to 10.16mm.Choosing insert direction, contact direction, Plug-in direction according to requests. The product is designed in accordance with IEC 60998, UL1059, CSA C22.2 NO.158 standards.

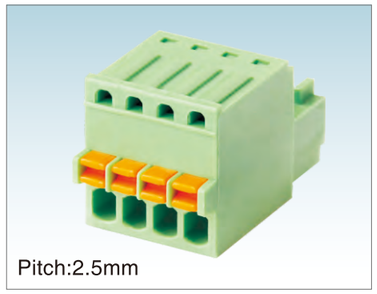

Pitch:2.5mm

WJ15EDGKD-2.5

UL/CUL 技术参数 UL/CUL Technical Data				
等级	Use Group	B	C	D
额定电压	Rated Voltage [V]	150	-	-
额定电流	Rated Current [A]	5	-	-
接线范围 Wire Range	单芯线 Solid [AWG]	26~20		
	多芯线 Stranded [AWG]	26~20		
耐电压	Dielectric Voltage-Withstand	1.3KV		

IEC 技术参数 IEC Technical Data				
过电压类别	Surge voltage category	Ⅲ	Ⅲ	Ⅱ
污染等级	Contamination Class	3	2	2
额定电压	Rated Voltage [V]	100	160	320
额定电流	Rated Current [A]	6	6	6
额定冲击电压	Impulse withstand voltage [KV]	1.5	2.5	2.5
导线截面积 Conductor cross section	硬质导线 Solid[mm²]	0.2~0.5		
	柔性导线 Flexible[mm²]	0.2~0.5		

材料 Material		
绝缘材料	Insulation Material	PA66
阻燃等级	Inflammability Class	UL94V-0
导体材料	Conductor Material	Copper alloy
导体表面镀层	Conductor Plating	Sn plated

一般参数 Other Data		
间距/极数	Pitch/Poles [mm]/[P]	2.5/2~24
剥线长度	Stripping Length [mm]	7~8
螺丝/扭矩	Screw/Torque(Max)[N.m]	/
工作温度	Operating temperature[℃]	-40~+105
焊锡温度	Soldering temperature	/
引针尺寸	Pin dimensions [mm]	/
PCB板孔径	PCB Hole Diameter [mm]	/

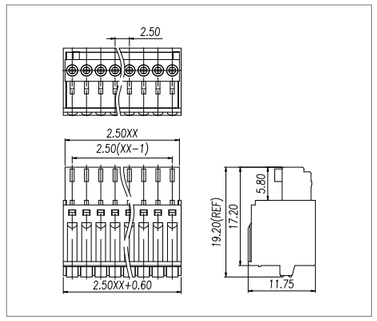

Pitch:2.5/2.54mm

WJ15EDGVC-2.5/2.54

UL/CUL 技术参数 UL/CUL Technical Data				
等级	Use Group	B	C	D
额定电压	Rated Voltage [V]	150	-	-
额定电流	Rated Current [A]	5	-	-
接线范围 Wire Range	单芯线 Solid [AWG]	/		
	多芯线 Stranded [AWG]	/		
耐电压	Dielectric Voltage-Withstand	1.3KV		

IEC 技术参数 IEC Technical Data				
过电压类别	Overvoltage Category	Ⅲ	Ⅲ	Ⅱ
污染等级	Contamination Class	3	2	2
额定电压	Rated Voltage [V]	80	160	320
额定电流	Rated Current [A]	6	6	6
额定冲击电压	Impulse withstand voltage [KV]	1.5	2.5	2.5
导线截面积 Conductor cross section	硬质导线 Solid[mm²]	/		
	柔性导线 Flexible[mm²]	/		

材料 Material		
绝缘材料	Insulation Material	PA66
阻燃等级	Flame retardant rating	UL94V-0
导体材料	Conductor Material	Copper alloy
导体表面镀层	Plating of conductor surface	Sn plated

一般参数 Other Data		
间距/极数	Pitch/Poles [mm]/[P]	2.5,2.54/2~24
剥线长度	Stripping Length [mm]	/
螺丝/扭矩	Screw/Torque(Max)[N.m]	/
工作温度	Operating temperature[℃]	-40~+105
焊锡温度	Soldering temperature	260℃ /5S
引针尺寸	Pin dimensions [mm]	0.8*0.8
PCB板孔径	PCB Hole Diameter [mm]	∅1.4

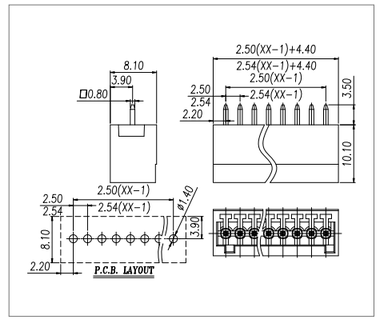

Pitch:2.5/2.54mm

WJ15EDGRC-2.5/2.54

UL/CUL 技术参数 UL/CUL Technical Data				
等级	Use Group	B	C	D
额定电压	Rated Voltage [V]	150	-	-
额定电流	Rated Current [A]	5	-	-
接线范围 Wire Range	单芯线 Solid [AWG]	/		
	多芯线 Stranded [AWG]	/		
耐电压	Dielectric Voltage-Withstand	1.3KV		

IEC 技术参数 IEC Technical Data				
过电压类别	Overvoltage Category	Ⅲ	Ⅲ	Ⅱ
污染等级	Contamination Class	3	2	2
额定电压	Rated Voltage [V]	80	160	320
额定电流	Rated Current [A]	6	6	6
额定冲击电压	Impulse withstand voltage [KV]	1.5	2.5	2.5
导线截面积 Conductor cross section	硬质导线 Solid[mm²]	/		
	柔性导线 Flexible[mm²]	/		

材料 Material		
绝缘材料	Insulation Material	PA66
阻燃等级	Flame retardant rating	UL94V-0
导体材料	Conductor Material	Copper alloy
导体表面镀层	Plating of conductor surface	Sn plated

一般参数 Other Data		
间距/极数	Pitch/Poles [mm]/[P]	2.5,2.54/2~24
剥线长度	Stripping Length [mm]	/
螺丝/扭矩	Screw/Torque(Max)[N.m]	/
工作温度	Operating temperature[℃]	-40~+105
焊锡温度	Soldering temperature	260℃ /5S
引针尺寸	Pin dimensions [mm]	0.8*0.8
PCB板孔径	PCB Hole Diameter [mm]	∅1.4

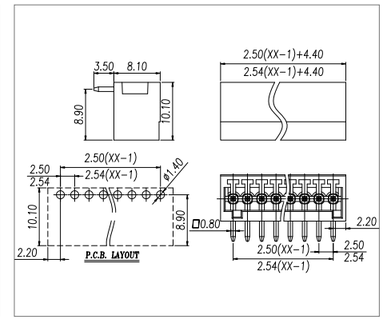



Pitch:2.5mm

WJ15EDGVH-2.5

UL/CUL 技术参数 UL/CUL Technical Data				
等级	Use Group	B	C	D
额定电压	Rated Voltage [V]	150	-	-
额定电流	Rated Current [A]	5	-	-
接线范围 Wire Range	单芯线 Solid [AWG]	/		
	多芯线 Stranded [AWG]	/		
耐电压	Dielectric Voltage-Withstand	1.3KV		
IEC 技术参数 IEC Technical Data				
过电压类别	Overvoltage Category	Ⅲ	Ⅲ	Ⅱ
污染等级	Contamination Class	3	2	2
额定电压	Rated Voltage [V]	80	160	320
额定电流	Rated Current [A]	6	6	6
额定冲击电压	Impulse withstand voltage [KV]	1.5	2.5	2.5
导线截面积 Conductor cross section	硬质导线 Solid[mm²]	/		
	柔性导线 Flexible[mm²]	/		
材料 Material				
绝缘材料	Insulation Material	PA66		
阻燃等级	Flame retardant rating	UL94V-0		
导体材料	Conductor Material	Copper alloy		
导体表面镀层	Plating of conductor surface	Sn plated		
一般参数 Other Data				
间距/极数	Pitch/Poles [mm]/[P]	2.5/2*2~2*24		
剥线长度	Stripping Length [mm]	/		
螺丝/扭矩	Screw/Torque(Max)[N.m]	/		
工作温度	Operating temperature[℃]	-40~+105		
焊锡温度	Soldering temperature	260℃ /5S		
引针尺寸	Pin dimensions [mm]	0.8*0.8		
PCB板孔径	PCB Hole Diameter [mm]	∅1.4		

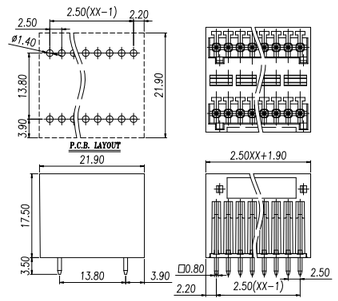



Pitch:2.5mm

WJ15EDGRH-2.5

UL/CUL 技术参数 UL/CUL Technical Data				
等级	Use Group	B	C	D
额定电压	Rated Voltage [V]	150	-	-
额定电流	Rated Current [A]	5	-	-
接线范围 Wire Range	单芯线 Solid [AWG]	/		
	多芯线 Stranded [AWG]	/		
耐电压	Dielectric Voltage-Withstand	1.3KV		
IEC 技术参数 IEC Technical Data				
过电压类别	Overvoltage Category	Ⅲ	Ⅲ	Ⅱ
污染等级	Contamination Class	3	2	2
额定电压	Rated Voltage [V]	80	160	320
额定电流	Rated Current [A]	6	6	6
额定冲击电压	Impulse withstand voltage [KV]	1.5	2.5	2.5
导线截面积 Conductor cross section	硬质导线 Solid[mm²]	/		
	柔性导线 Flexible[mm²]	/		
材料 Material				
绝缘材料	Insulation Material	PA66		
阻燃等级	Flame retardant rating	UL94V-0		
导体材料	Conductor Material	Copper alloy		
导体表面镀层	Plating of conductor surface	Sn plated		
一般参数 Other Data				
间距/极数	Pitch/Poles [mm]/[P]	2.5/2*2~2*24		
剥线长度	Stripping Length [mm]	/		
螺丝/扭矩	Screw/Torque(Max)[N.m]	/		
工作温度	Operating temperature[℃]	-40~+105		
焊锡温度	Soldering temperature	260℃ /5S		
引针尺寸	Pin dimensions [mm]	0.8*0.8		
PCB板孔径	PCB Hole Diameter [mm]	∅1.4		

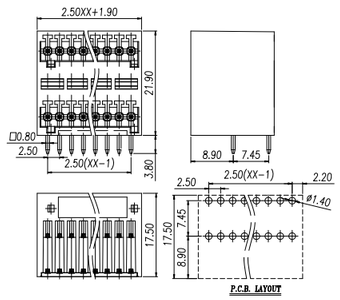

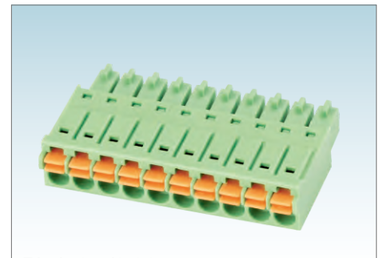

Pitch:3.5/3.81mm

WJ15EDGKN-3.5/3.81

UL/CUL 技术参数 UL/CUL Technical Data				
等级	Use Group	B	C	D
额定电压	Rated Voltage [V]	300	-	300
额定电流	Rated Current [A]	8	-	8
接线范围 Wire Range	单芯线 Solid [AWG]	24~16		
	多芯线 Stranded [AWG]	24~16		
耐电压	Dielectric Voltage-Withstand	1.6KV		
IEC 技术参数 IEC Technical Data				
过电压类别	Overvoltage Category	Ⅲ	Ⅲ	Ⅱ
污染等级	Contamination Class	3	2	2
额定电压	Rated Voltage [V]	160	160	320
额定电流	Rated Current [A]	8	8	8
额定冲击电压	Impulse withstand voltage [KV]	2.5	2.5	2.5
导线截面积 Conductor cross section	硬质导线 Solid[mm²]	0.2~1.5		
	柔性导线 Flexible[mm²]	0.2~1.5		
材料 Material				
绝缘材料	Insulation Material	PA66		
阻燃等级	Flame retardant rating	UL94V-0		
导体材料	Conductor Material	Copper alloy		
导体表面镀层	Plating of conductor surface	Sn plated		
一般参数 Other Data				
间距/极数	Pitch/Poles [mm]/[P]	3.5,3.81/2~24		
剥线长度	Stripping Length [mm]	9~10		
螺丝/扭矩	Screw/Torque(Max)[N.m]	/		
工作温度	Operating temperature[℃]	-40~+105		
焊锡温度	Soldering temperature	/		
引针尺寸	Pin dimensions [mm]	/		
PCB板孔径	PCB Hole Diameter [mm]	/		

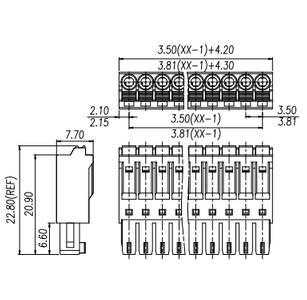

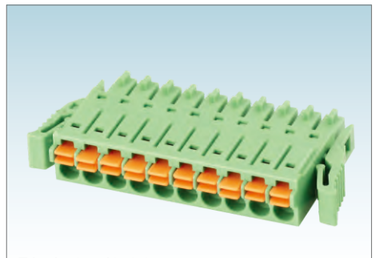

Pitch:3.5/3.81mm

WJ15EDGKNG-3.5/3.81

UL/CUL 技术参数 UL/CUL Technical Data				
等级	Use Group	B	C	D
额定电压	Rated Voltage [V]	300	-	300
额定电流	Rated Current [A]	8	-	8
接线范围 Wire Range	单芯线 Solid [AWG]	24~16		
	多芯线 Stranded [AWG]	24~16		
耐电压	Dielectric Voltage-Withstand	1.6KV		
IEC 技术参数 IEC Technical Data				
过电压类别	Overvoltage Category	Ⅲ	Ⅲ	Ⅱ
污染等级	Contamination Class	3	2	2
额定电压	Rated Voltage [V]	160	160	320
额定电流	Rated Current [A]	8	8	8
额定冲击电压	Impulse withstand voltage [KV]	2.5	2.5	2.5
导线截面积 Conductor cross section	硬质导线 Solid[mm²]	0.2~1.5		
	柔性导线 Flexible[mm²]	0.2~1.5		
材料 Material				
绝缘材料	Insulation Material	PA66		
阻燃等级	Flame retardant rating	UL94V-0		
导体材料	Conductor Material	Copper alloy		
导体表面镀层	Plating of conductor surface	Sn plated		
一般参数 Other Data				
间距/极数	Pitch/Poles [mm]/[P]	3.5,3.81/2~24		
剥线长度	Stripping Length [mm]	9~10		
螺丝/扭矩	Screw/Torque(Max)[N.m]	/		
工作温度	Operating temperature[℃]	-40~+105		
焊锡温度	Soldering temperature	/		
引针尺寸	Pin dimensions [mm]	/		
PCB板孔径	PCB Hole Diameter [mm]	/		

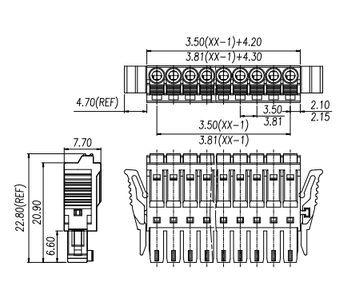

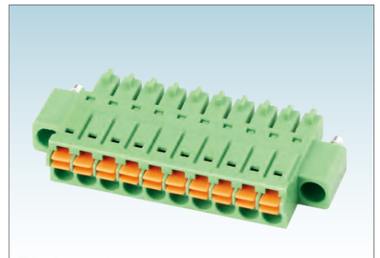

Pitch:3.5/3.81mm

WJ15EDGKNM-3.5/3.81

UL/CUL 技术参数 UL/CUL Technical Data				
等级	Use Group	B	C	D
额定电压	Rated Voltage [V]	300	-	300
额定电流	Rated Current [A]	8	-	8
接线范围 Wire Range	单芯线 Solid [AWG]	24~16		
	多芯线 Stranded [AWG]	24~16		
耐电压	Dielectric Voltage-Withstand	1.6KV		
IEC 技术参数 IEC Technical Data				
过电压类别	Overvoltage Category	Ⅲ	Ⅲ	Ⅱ
污染等级	Contamination Class	3	2	2
额定电压	Rated Voltage [V]	160	160	320
额定电流	Rated Current [A]	8	8	8
额定冲击电压	Impulse withstand voltage [KV]	2.5	2.5	2.5
导线截面积 Conductor cross section	硬质导线 Solid[mm²]	0.2~1.5		
	柔性导线 Flexible[mm²]	0.2~1.5		
材料 Material				
绝缘材料	Insulation Material	PA66		
阻燃等级	Flame retardant rating	UL94V-0		
导体材料	Conductor Material	Copper alloy		
导体表面镀层	Plating of conductor surface	Sn plated		
一般参数 Other Data				
间距/极数	Pitch/Poles [mm]/[P]	3.5,3.81/2~24		
剥线长度	Stripping Length [mm]	9-10		
螺丝/扭矩	Screw/Torque(Max)[N.m]	/		
工作温度	Operating temperature[℃]	-40~+105		
焊锡温度	Soldering temperature	/		
引针尺寸	Pin dimensions [mm]	/		
PCB板孔径	PCB Hole Diameter [mm]	/		

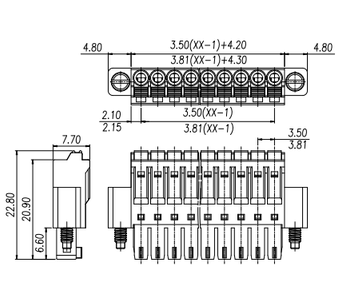

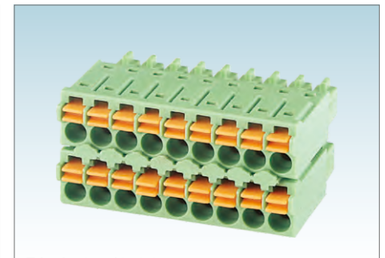

Pitch:3.5/3.81mm

WJ15EDGKN-B-3.5/3.81

UL/CUL 技术参数 UL/CUL Technical Data				
等级	Use Group	B	C	D
额定电压	Rated Voltage [V]	300	-	300
额定电流	Rated Current [A]	8	-	8
接线范围 Wire Range	单芯线 Solid [AWG]	24~16		
	多芯线 Stranded [AWG]	24~16		
耐电压	Dielectric Voltage-Withstand	1.6KV		
IEC 技术参数 IEC Technical Data				
过电压类别	Overvoltage Category	Ⅲ	Ⅲ	Ⅱ
污染等级	Contamination Class	3	2	2
额定电压	Rated Voltage [V]	160	160	320
额定电流	Rated Current [A]	8	8	8
额定冲击电压	Impulse withstand voltage [KV]	2.5	2.5	2.5
导线截面积 Conductor cross section	硬质导线 Solid[mm²]	0.2~1.5		
	柔性导线 Flexible[mm²]	0.2~1.5		
材料 Material				
绝缘材料	Insulation Material	PA66		
阻燃等级	Flame retardant rating	UL94V-0		
导体材料	Conductor Material	Copper alloy		
导体表面镀层	Plating of conductor surface	Sn plated		
一般参数 Other Data				
间距/极数	Pitch/Poles [mm]/[P]	3.5,3.81/ 2*2~2*24		
剥线长度	Stripping Length [mm]	9~10		
螺丝/扭矩	Screw/Torque(Max)[N.m]	/		
工作温度	Operating temperature[℃]	-40~+105		
焊锡温度	Soldering temperature	/		
引针尺寸	Pin dimensions [mm]	/		
PCB板孔径	PCB Hole Diameter [mm]	/		

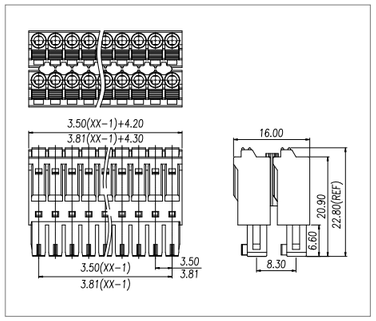

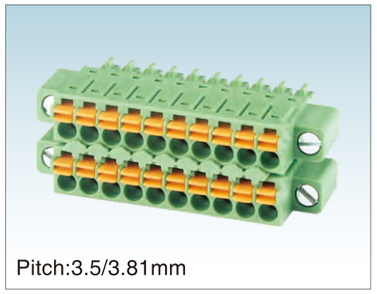

Pitch:3.5/3.81mm

WJ15EDGKNM-B-3.5/3.81

UL/CUL 技术参数 UL/CUL Technical Data				
等级	Use Group	B	C	D
额定电压	Rated Voltage [V]	300	-	300
额定电流	Rated Current [A]	8	-	8
接线范围 Wire Range	单芯线 Solid [AWG]	24~16		
	多芯线 Stranded [AWG]	24~16		
耐电压	Dielectric Voltage-Withstand	1.6KV		

IEC 技术参数 IEC Technical Data				
过电压类别	Overvoltage Category	Ⅲ	Ⅲ	Ⅱ
污染等级	Contamination Class	3	2	2
额定电压	Rated Voltage [V]	160	160	320
额定电流	Rated Current [A]	8	8	8
额定冲击电压	Impulse withstand voltage [KV]	2.5	2.5	2.5
导线截面积 Conductor cross section	硬质导线 Solid[mm²]	0.2~1.5		
	柔性导线 Flexible[mm²]	0.2~1.5		

材料 Material		
绝缘材料	Insulation Material	PA66
阻燃等级	Flame retardant rating	UL94V-0
导体材料	Conductor Material	Copper alloy
导体表面镀层	Plating of conductor surface	Sn plated

一般参数 Other Data		
间距/极数	Pitch/Poles [mm]/[P]	3.5,3.81/ 2*2~2*24
剥线长度	Stripping Length [mm]	9~10
螺丝/扭矩	Screw/Torque(Max)[N.m]	/
工作温度	Operating temperature[℃]	-40~+105
焊锡温度	Soldering temperature	/
引针尺寸	Pin dimensions [mm]	/
PCB板孔径	PCB Hole Diameter [mm]	/

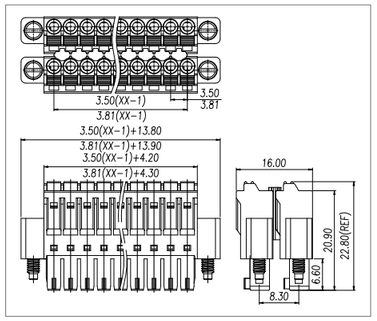

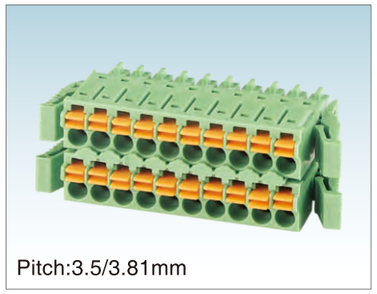

Pitch:3.5/3.81mm

WJ15EDGKNG-B-3.5/3.81

UL/CUL 技术参数 UL/CUL Technical Data				
等级	Use Group	B	C	D
额定电压	Rated Voltage [V]	300	-	300
额定电流	Rated Current [A]	8	-	8
接线范围 Wire Range	单芯线 Solid [AWG]	24~16		
	多芯线 Stranded [AWG]	24~16		
耐电压	Dielectric Voltage-Withstand	1.6KV		

IEC 技术参数 IEC Technical Data				
过电压类别	Overvoltage Category	Ⅲ	Ⅲ	Ⅱ
污染等级	Contamination Class	3	2	2
额定电压	Rated Voltage [V]	160	160	320
额定电流	Rated Current [A]	8	8	8
额定冲击电压	Impulse withstand voltage [KV]	2.5	2.5	2.5
导线截面积 Conductor cross section	硬质导线 Solid[mm²]	0.2~1.5		
	柔性导线 Flexible[mm²]	0.2~1.5		

材料 Material		
绝缘材料	Insulation Material	PA66
阻燃等级	Flame retardant rating	UL94V-0
导体材料	Conductor Material	Copper alloy
导体表面镀层	Plating of conductor surface	Sn plated

一般参数 Other Data		
间距/极数	Pitch/Poles [mm]/[P]	3.5,3.81/ 2*2~2*24
剥线长度	Stripping Length [mm]	9~10
螺丝/扭矩	Screw/Torque(Max)[N.m]	/
工作温度	Operating temperature[℃]	-40~+105
焊锡温度	Soldering temperature	/
引针尺寸	Pin dimensions [mm]	/
PCB板孔径	PCB Hole Diameter [mm]	/

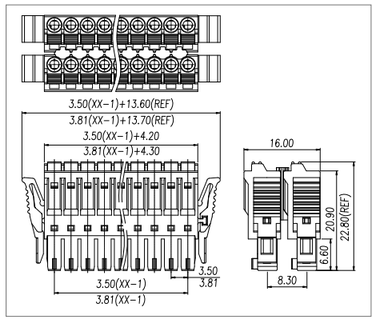

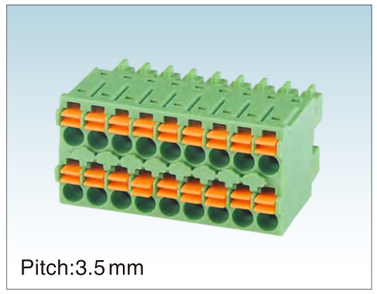

Pitch:3.5mm

WJ15EDGKN-B-3.5-1000A

UL/CUL 技术参数 UL/CUL Technical Data				
等级	Use Group	B	C	D
额定电压	Rated Voltage [V]	300	-	300
额定电流	Rated Current [A]	8	-	8
接线范围 Wire Range	单芯线 Solid [AWG]	24~16		
	多芯线 Stranded [AWG]	24~16		
耐电压	Dielectric Voltage-Withstand	1.6KV		

IEC 技术参数 IEC Technical Data				
过电压类别	Overvoltage Category	Ⅲ	Ⅲ	Ⅱ
污染等级	Contamination Class	3	2	2
额定电压	Rated Voltage [V]	160	160	320
额定电流	Rated Current [A]	8	8	8
额定冲击电压	Impulse withstand voltage [KV]	2.5	2.5	2.5
导线截面积 Conductor cross section	硬质导线 Solid[mm²]	0.2~1.5		
	柔性导线 Flexible[mm²]	0.2~1.5		

材料 Material		
绝缘材料	Insulation Material	PA66
阻燃等级	Flame retardant rating	UL94V-0
导体材料	Conductor Material	Copper alloy
导体表面镀层	Plating of conductor surface	Sn plated

一般参数 Other Data		
间距/极数	Pitch/Poles [mm]/[P]	3.5/2*2~2*24
剥线长度	Stripping Length [mm]	9~10
螺丝/扭矩	Screw/Torque(Max)[N.m]	/
工作温度	Operating temperature[℃]	-40~+105
焊锡温度	Soldering temperature	/
引针尺寸	Pin dimensions [mm]	/
PCB板孔径	PCB Hole Diameter [mm]	/

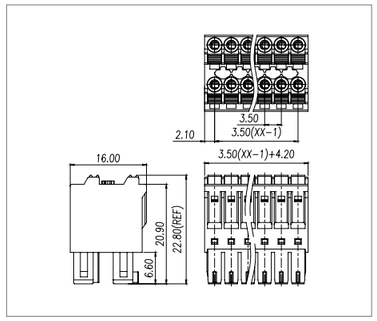

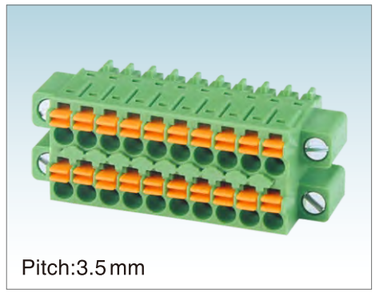

Pitch:3.5mm

WJ15EDGKNM-B-3.5-1000A

UL/CUL 技术参数 UL/CUL Technical Data				
等级	Use Group	B	C	D
额定电压	Rated Voltage [V]	300	-	300
额定电流	Rated Current [A]	8	-	8
接线范围 Wire Range	单芯线 Solid [AWG]	24~16		
	多芯线 Stranded [AWG]	24~16		
耐电压	Dielectric Voltage-Withstand	1.6KV		

IEC 技术参数 IEC Technical Data				
过电压类别	Overvoltage Category	Ⅲ	Ⅲ	Ⅱ
污染等级	Contamination Class	3	2	2
额定电压	Rated Voltage [V]	160	160	320
额定电流	Rated Current [A]	8	8	8
额定冲击电压	Impulse withstand voltage [KV]	2.5	2.5	2.5
导线截面积 Conductor cross section	硬质导线 Solid[mm²]	0.2~1.5		
	柔性导线 Flexible[mm²]	0.2~1.5		

材料 Material		
绝缘材料	Insulation Material	PA66
阻燃等级	Flame retardant rating	UL94V-0
导体材料	Conductor Material	Copper alloy
导体表面镀层	Plating of conductor surface	Sn plated

一般参数 Other Data		
间距/极数	Pitch/Poles [mm]/[P]	3.5/2*2~2*24
剥线长度	Stripping Length [mm]	9~10
螺丝/扭矩	Screw/Torque(Max)[N.m]	/
工作温度	Operating temperature[℃]	-40~+105
焊锡温度	Soldering temperature	/
引针尺寸	Pin dimensions [mm]	/
PCB板孔径	PCB Hole Diameter [mm]	/

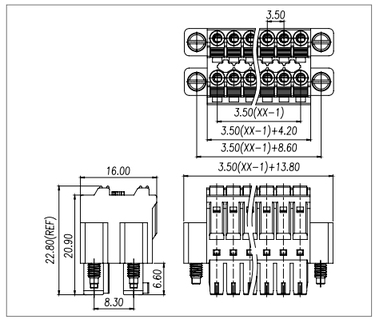

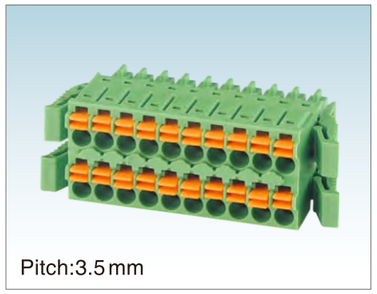

Pitch:3.5mm

WJ15EDGKNG-B-3.5-1000A

UL/CUL 技术参数 UL/CUL Technical Data				
等级	Use Group	B	C	D
额定电压	Rated Voltage [V]	300	-	300
额定电流	Rated Current [A]	8	-	8
接线范围 Wire Range	单芯线 Solid [AWG]	24~16		
	多芯线 Stranded [AWG]	24~16		
耐电压	Dielectric Voltage-Withstand	1.6KV		

IEC 技术参数 IEC Technical Data				
过电压类别	Overvoltage Category	Ⅲ	Ⅲ	Ⅱ
污染等级	Contamination Class	3	2	2
额定电压	Rated Voltage [V]	160	160	320
额定电流	Rated Current [A]	8	8	8
额定冲击电压	Impulse withstand voltage [KV]	2.5	2.5	2.5
导线截面积 Conductor cross section	硬质导线 Solid[mm²]	0.2~1.5		
	柔性导线 Flexible[mm²]	0.2~1.5		

材料 Material		
绝缘材料	Insulation Material	PA66
阻燃等级	Flame retardant rating	UL94V-0
导体材料	Conductor Material	Copper alloy
导体表面镀层	Plating of conductor surface	Sn plated

一般参数 Other Data		
间距/极数	Pitch/Poles [mm]/[P]	3.5/2*2~2*24
剥线长度	Stripping Length [mm]	9~10
螺丝/扭矩	Screw/Torque(Max)[N.m]	/
工作温度	Operating temperature[℃]	-40~+105
焊锡温度	Soldering temperature	/
引针尺寸	Pin dimensions [mm]	/
PCB板孔径	PCB Hole Diameter [mm]	/

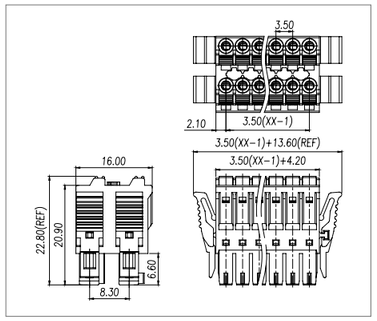

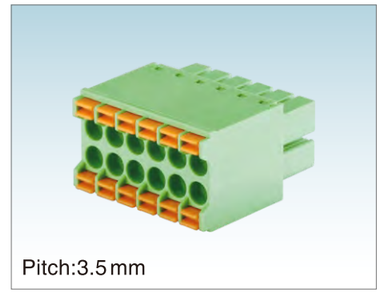

Pitch:3.5mm

WJ15EDGKNH-3.5

UL/CUL 技术参数 UL/CUL Technical Data				
等级	Use Group	B	C	D
额定电压	Rated Voltage [V]	300	-	300
额定电流	Rated Current [A]	8	-	8
接线范围 Wire Range	单芯线 Solid [AWG]	24~16		
	多芯线 Stranded [AWG]	24~16		
耐电压	Dielectric Voltage-Withstand	1.6KV		

IEC 技术参数 IEC Technical Data				
过电压类别	Overvoltage Category	Ⅲ	Ⅲ	Ⅱ
污染等级	Contamination Class	3	2	2
额定电压	Rated Voltage [V]	160	160	320
额定电流	Rated Current [A]	8	8	8
额定冲击电压	Impulse withstand voltage [KV]	2.5	2.5	2.5
导线截面积 Conductor cross section	硬质导线 Solid[mm²]	0.2~1.5		
	柔性导线 Flexible[mm²]	0.2~1.5		

材料 Material		
绝缘材料	Insulation Material	PA66
阻燃等级	Flame retardant rating	UL94V-0
导体材料	Conductor Material	Copper alloy
导体表面镀层	Plating of conductor surface	Sn plated

一般参数 Other Data		
间距/极数	Pitch/Poles [mm]/[P]	3.5/2*2~2*24
剥线长度	Stripping Length [mm]	9~10
螺丝/扭矩	Screw/Torque(Max)[N.m]	/
工作温度	Operating temperature[℃]	-40~+105
焊锡温度	Soldering temperature	/
引针尺寸	Pin dimensions [mm]	/
PCB板孔径	PCB Hole Diameter [mm]	/

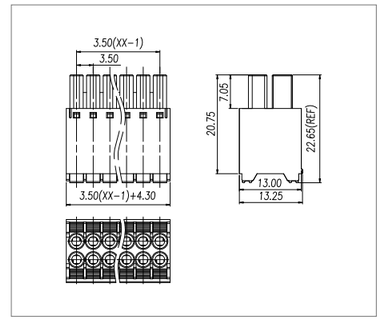

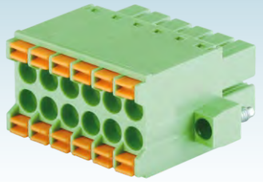

Pitch:3.5mm

WJ15EDGKNHM-3.5

UL/CUL 技术参数 UL/CUL Technical Data				
等级	Use Group	B	C	D
额定电压	Rated Voltage [V]	300	-	300
额定电流	Rated Current [A]	8	-	8
接线范围 Wire Range	单芯线 Solid [AWG]	24~16		
	多芯线 Stranded [AWG]	24~16		
耐电压	Dielectric Voltage-Withstand	1.6KV		

IEC 技术参数 IEC Technical Data				
过电压类别	Overvoltage Category	Ⅲ	Ⅲ	Ⅱ
污染等级	Contamination Class	3	2	2
额定电压	Rated Voltage [V]	160	160	320
额定电流	Rated Current [A]	8	8	8
额定冲击电压	Impulse withstand voltage [KV]	2.5	2.5	2.5
导线截面积 Conductor cross section	硬质导线 Solid[mm²]	0.2~1.5		
	柔性导线 Flexible[mm²]	0.2~1.5		

材料 Material		
绝缘材料	Insulation Material	PA66
阻燃等级	Flame retardant rating	UL94V-0
导体材料	Conductor Material	Copper alloy
导体表面镀层	Plating of conductor surface	Sn plated

一般参数 Other Data		
间距/极数	Pitch/Poles [mm]/[P]	3.5/2*2~2*24
剥线长度	Stripping Length [mm]	9-10
螺丝/扭矩	Screw/Torque(Max)[N.m]	/
工作温度	Operating temperature[℃]	-40~+105
焊锡温度	Soldering temperature	/
引针尺寸	Pin dimensions [mm]	/
PCB板孔径	PCB Hole Diameter [mm]	/

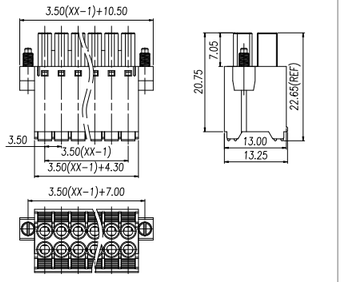

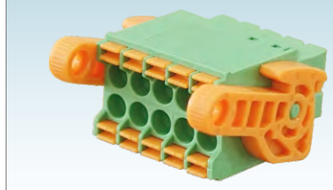

Pitch:3.5mm

WJ15EDGKNHG-3.5

UL/CUL 技术参数 UL/CUL Technical Data				
等级	Use Group	B	C	D
额定电压	Rated Voltage [V]	300	-	300
额定电流	Rated Current [A]	8	-	8
接线范围 Wire Range	单芯线 Solid [AWG]	24~16		
	多芯线 Stranded [AWG]	24~16		
耐电压	Dielectric Voltage-Withstand	1.6KV		

IEC 技术参数 IEC Technical Data				
过电压类别	Overvoltage Category	Ⅲ	Ⅲ	Ⅱ
污染等级	Contamination Class	3	2	2
额定电压	Rated Voltage [V]	160	160	320
额定电流	Rated Current [A]	8	8	8
额定冲击电压	Impulse withstand voltage [KV]	2.5	2.5	2.5
导线截面积 Conductor cross section	硬质导线 Solid[mm²]	0.2~1.5		
	柔性导线 Flexible[mm²]	0.2~1.5		

材料 Material		
绝缘材料	Insulation Material	PA66
阻燃等级	Flame retardant rating	UL94V-0
导体材料	Conductor Material	Copper alloy
导体表面镀层	Plating of conductor surface	Sn plated

一般参数 Other Data		
间距/极数	Pitch/Poles [mm]/[P]	3.5/2*2~2*24
剥线长度	Stripping Length [mm]	9-10
螺丝/扭矩	Screw/Torque(Max)[N.m]	/
工作温度	Operating temperature[℃]	-40~+105
焊锡温度	Soldering temperature	/
引针尺寸	Pin dimensions [mm]	/
PCB板孔径	PCB Hole Diameter [mm]	/

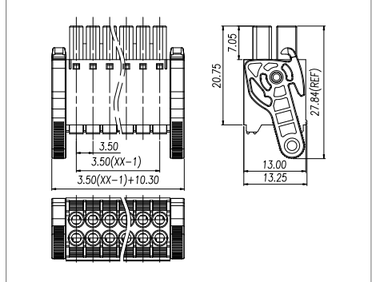



Pitch:2.54mm

WJ15EDGKNHB-2.54

UL/CUL 技术参数 UL/CUL Technical Data				
等级	Use Group	B	C	D
额定电压	Rated Voltage [V]	150	-	-
额定电流	Rated Current [A]	5	-	-
接线范围 Wire Range	单芯线 Solid [AWG]	30~20		
	多芯线 Stranded [AWG]	30~20		
耐电压	Dielectric Voltage-Withstand	1.3KV		

IEC 技术参数 IEC Technical Data				
过电压类别	Surge voltage category	Ⅲ	Ⅲ	Ⅱ
污染等级	Contamination Class	3	2	2
额定电压	Rated Voltage [V]	160	160	320
额定电流	Rated Current [A]	6	6	6
额定冲击电压	Impulse withstand voltage [KV]	2.5	2.5	2.5
导线截面积 Conductor cross section	硬质导线 Solid[mm²]	0.2-0.5		
	柔性导线 Flexible[mm²]	0.2-0.5		

材料 Material		
绝缘材料	Insulation Material	PA66
阻燃等级	Inflammability Class	UL94V-0
导体材料	Conductor Material	Copper alloy
导体表面镀层	Conductor Plating	Sn plated

一般参数 Other Data		
间距/极数	Pitch/Poles [mm]/[P]	2.54/2*2~2*24
剥线长度	Stripping Length [mm]	7-8
螺丝/扭矩	Screw/Torque(Max)[N.m]	/
工作温度	Operating temperature[℃]	-40~+105
焊锡温度	Soldering temperature	/
引针尺寸	Pin dimensions [mm]	/
PCB板孔径	PCB Hole Diameter [mm]	/

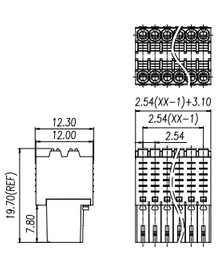



Pitch:2.54mm

WJ15EDGKNHBM-2.54

UL/CUL 技术参数 UL/CUL Technical Data				
等级	Use Group	B	C	D
额定电压	Rated Voltage [V]	150	-	-
额定电流	Rated Current [A]	5	-	-
接线范围 Wire Range	单芯线 Solid [AWG]	30~20		
	多芯线 Stranded [AWG]	30~20		
耐电压	Dielectric Voltage-Withstand	1.3KV		

IEC 技术参数 IEC Technical Data				
过电压类别	Surge voltage category	Ⅲ	Ⅲ	Ⅱ
污染等级	Contamination Class	3	2	2
额定电压	Rated Voltage [V]	160	160	320
额定电流	Rated Current [A]	6	6	6
额定冲击电压	Impulse withstand voltage [KV]	2.5	2.5	2.5
导线截面积 Conductor cross section	硬质导线 Solid[mm²]	0.2-0.5		
	柔性导线 Flexible[mm²]	0.2-0.5		

材料 Material		
绝缘材料	Insulation Material	PA66
阻燃等级	Inflammability Class	UL94V-0
导体材料	Conductor Material	Copper alloy
导体表面镀层	Conductor Plating	Sn plated

一般参数 Other Data		
间距/极数	Pitch/Poles [mm]/[P]	2.54/2*2~2*24
剥线长度	Stripping Length [mm]	7-8
螺丝/扭矩	Screw/Torque(Max)[N.m]	/
工作温度	Operating temperature[℃]	-40~+105
焊锡温度	Soldering temperature	/
引针尺寸	Pin dimensions [mm]	/
PCB板孔径	PCB Hole Diameter [mm]	/

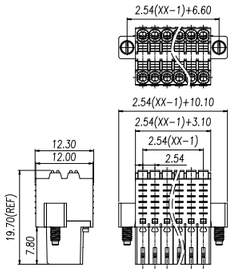



Pitch:2.54mm

WJ15EDGKNHBG-2.54

UL/CUL 技术参数 UL/CUL Technical Data				
等级	Use Group	B	C	D
额定电压	Rated Voltage [V]	150	-	-
额定电流	Rated Current [A]	5	-	-
接线范围 Wire Range	单芯线 Solid [AWG]	30~20		
	多芯线 Stranded [AWG]	30~20		
耐电压	Dielectric Voltage-Withstand	1.3KV		

IEC 技术参数 IEC Technical Data				
过电压类别	Surge voltage category	Ⅲ	Ⅲ	Ⅱ
污染等级	Contamination Class	3	2	2
额定电压	Rated Voltage [V]	160	160	320
额定电流	Rated Current [A]	6	6	6
额定冲击电压	Impulse withstand voltage [KV]	2.5	2.5	2.5
导线截面积 Conductor cross section	硬质导线 Solid[mm²]	0.2-0.5		
	柔性导线 Flexible[mm²]	0.2-0.5		

材料 Material		
绝缘材料	Insulation Material	PA66
阻燃等级	Inflammability Class	UL94V-0
导体材料	Conductor Material	Copper alloy
导体表面镀层	Conductor Plating	Sn plated

一般参数 Other Data		
间距/极数	Pitch/Poles [mm]/[P]	2.54/2*2~2*24
剥线长度	Stripping Length [mm]	7-8
螺丝/扭矩	Screw/Torque(Max)[N.m]	/
工作温度	Operating temperature[℃]	-40~+105
焊锡温度	Soldering temperature	/
引针尺寸	Pin dimensions [mm]	/
PCB板孔径	PCB Hole Diameter [mm]	/

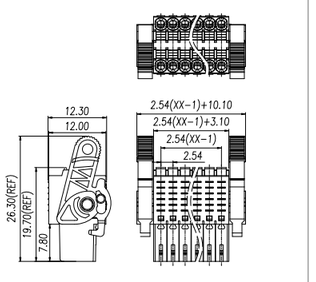

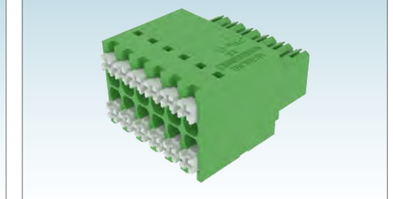

Pitch:3.5mm

WJ15EDGKNHB-3.5

UL/CUL 技术参数 UL/CUL Technical Data				
等级	Use Group	B	C	D
额定电压	Rated Voltage [V]	300	50	300
额定电流	Rated Current [A]	9.5	9.5	9.5
接线范围 Wire Range	单芯线 Solid [AWG]	26-16		
	多芯线 Stranded [AWG]	26-16		
耐电压	Dielectric Voltage-Withstand	1.6KV		

IEC 技术参数 IEC Technical Data				
过电压类别	Surge voltage category	Ⅲ	Ⅲ	Ⅱ
污染等级	Contamination Class	3	2	2
额定电压	Rated Voltage [V]	160	160	320
额定电流	Rated Current [A]	13.4	13.4	13.4
额定冲击电压	Impulse withstand voltage [KV]	2.5	2.5	2.5
导线截面积 Conductor cross section	硬质导线 Solid[mm²]	0.2-1.5		
	柔性导线 Flexible[mm²]	0.2-1.5		

材料 Material		
绝缘材料	Insulation Material	PA66
阻燃等级	Inflammability Class	UL94V-0
导体材料	Conductor Material	Copper alloy
导体表面镀层	Conductor Plating	Sn plated

一般参数 Other Data		
间距/极数	Pitch/Poles [mm]/[P]	3.5/2*2~2*24
剥线长度	Stripping Length [mm]	10-11
螺丝/扭矩	Screw/Torque(Max)[N.m]	/
工作温度	Operating temperature[℃]	-40~+105
焊锡温度	Soldering temperature	/
引针尺寸	Pin dimensions [mm]	/
PCB板孔径	PCB Hole Diameter [mm]	/

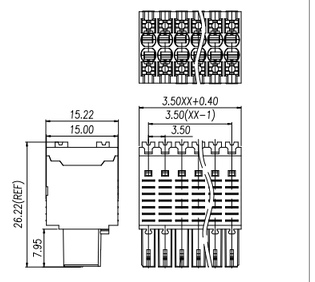

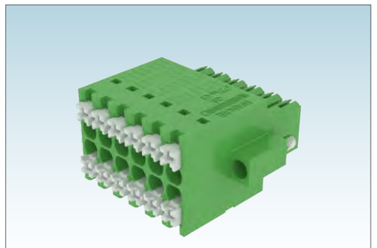

Pitch:3.5mm

WJ15EDGKNHBM-3.5

UL/CUL 技术参数 UL/CUL Technical Data				
等级	Use Group	B	C	D
额定电压	Rated Voltage [V]	300	50	300
额定电流	Rated Current [A]	9.5	9.5	9.5
接线范围 Wire Range	单芯线 Solid [AWG]	26-16		
	多芯线 Stranded [AWG]	26-16		
耐电压	Dielectric Voltage-Withstand	1.6KV		
IEC 技术参数 IEC Technical Data				
过电压类别	Surge voltage category	Ⅲ	Ⅲ	Ⅱ
污染等级	Contamination Class	3	2	2
额定电压	Rated Voltage [V]	160	160	320
额定电流	Rated Current [A]	13.4	13.4	13.4
额定冲击电压	Impulse withstand voltage [KV]	2.5	2.5	2.5
导线截面积 Conductor cross section	硬质导线 Solid[mm²]	0.2-1.5		
	柔性导线 Flexible[mm²]	0.2-1.5		
材料 Material				
绝缘材料	Insulation Material	PA66		
阻燃等级	Inflammability Class	UL94V-0		
导体材料	Conductor Material	Copper alloy		
导体表面镀层	Conductor Plating	Sn plated		
一般参数 Other Data				
间距/极数	Pitch/Poles [mm]/[P]	3.5/2*2~2*24		
剥线长度	Stripping Length [mm]	10-11		
螺丝/扭矩	Screw/Torque(Max)[N.m]	/		
工作温度	Operating temperature[℃]	-40~+105		
焊锡温度	Soldering temperature	/		
引针尺寸	Pin dimensions [mm]	/		
PCB板孔径	PCB Hole Diameter [mm]	/		

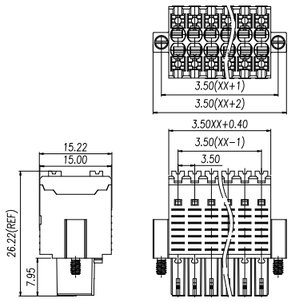

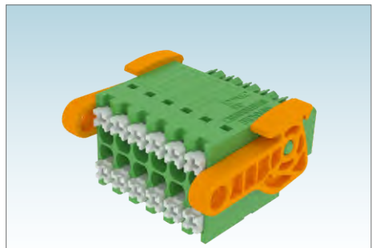

Pitch:3.5mm

WJ15EDGKNHBG-3.5

UL/CUL 技术参数 UL/CUL Technical Data				
等级	Use Group	B	C	D
额定电压	Rated Voltage [V]	300	50	300
额定电流	Rated Current [A]	9.5	9.5	9.5
接线范围 Wire Range	单芯线 Solid [AWG]	26-16		
	多芯线 Stranded [AWG]	26-16		
耐电压	Dielectric Voltage-Withstand	1.6KV		
IEC 技术参数 IEC Technical Data				
过电压类别	Surge voltage category	Ⅲ	Ⅲ	Ⅱ
污染等级	Contamination Class	3	2	2
额定电压	Rated Voltage [V]	160	160	320
额定电流	Rated Current [A]	13.4	13.4	13.4
额定冲击电压	Impulse withstand voltage [KV]	2.5	2.5	2.5
导线截面积 Conductor cross section	硬质导线 Solid[mm²]	0.2-1.5		
	柔性导线 Flexible[mm²]	0.2-1.5		
材料 Material				
绝缘材料	Insulation Material	PA66		
阻燃等级	Inflammability Class	UL94V-0		
导体材料	Conductor Material	Copper alloy		
导体表面镀层	Conductor Plating	Sn plated		
一般参数 Other Data				
间距/极数	Pitch/Poles [mm]/[P]	3.5/2*2~2*24		
剥线长度	Stripping Length [mm]	10-11		
螺丝/扭矩	Screw/Torque(Max)[N.m]	/		
工作温度	Operating temperature[℃]	-40~+105		
焊锡温度	Soldering temperature	/		
引针尺寸	Pin dimensions [mm]	/		
PCB板孔径	PCB Hole Diameter [mm]	/		

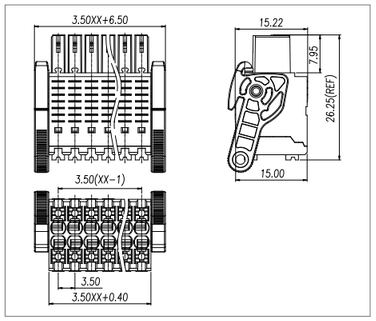



Pitch:3.5mm

WJ15EDGKSH-3.5

UL/CUL 技术参数 UL/CUL Technical Data				
等级	Use Group	B	C	D
额定电压	Rated Voltage [V]	150	-	150
额定电流	Rated Current [A]	7	-	7
接线范围 Wire Range	单芯线 Solid [AWG]	28~18		
	多芯线 Stranded [AWG]	28~18		
耐电压	Dielectric Voltage-Withstand	1.3KV		
IEC 技术参数 IEC Technical Data				
过电压类别	Overvoltage Category	Ⅲ	Ⅲ	Ⅱ
污染等级	Contamination Class	3	2	2
额定电压	Rated Voltage [V]	80	160	200
额定电流	Rated Current [A]	10	10	10
额定冲击电压	Impulse withstand voltage [KV]	2.5	2.5	2.5
导线截面积 Conductor cross section	硬质导线 Solid[mm²]	0.2~1.0		
	柔性导线 Flexible[mm²]	0.2~1.0		
材料 Material				
绝缘材料	Insulation Material	PA66		
阻燃等级	Flame retardant rating	UL94V-0		
导体材料	Conductor Material	Copper alloy		
导体表面镀层	Plating of conductor surface	Sn plated		
一般参数 Other Data				
间距/极数	Pitch/Poles [mm]/[P]	3.5/2*2~2*24		
剥线长度	Stripping Length [mm]	7~8		
螺丝/扭矩	Screw/Torque(Max)[N.m]	/		
工作温度	Operating temperature[℃]	-40~+105		
焊锡温度	Soldering temperature	/		
引针尺寸	Pin dimensions [mm]	/		
PCB板孔径	PCB Hole Diameter [mm]	/		

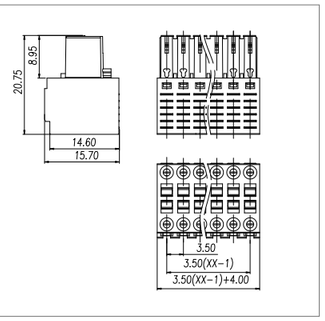



Pitch:3.5mm

WJ15EDGKSHM-3.5

UL/CUL 技术参数 UL/CUL Technical Data				
等级	Use Group	B	C	D
额定电压	Rated Voltage [V]	150	-	150
额定电流	Rated Current [A]	7	-	7
接线范围 Wire Range	单芯线 Solid [AWG]	28~18		
	多芯线 Stranded [AWG]	28~18		
耐电压	Dielectric Voltage-Withstand	1.3KV		
IEC 技术参数 IEC Technical Data				
过电压类别	Overvoltage Category	Ⅲ	Ⅲ	Ⅱ
污染等级	Contamination Class	3	2	2
额定电压	Rated Voltage [V]	80	160	200
额定电流	Rated Current [A]	10	10	10
额定冲击电压	Impulse withstand voltage [KV]	2.5	2.5	2.5
导线截面积 Conductor cross section	硬质导线 Solid[mm²]	0.2~1.0		
	柔性导线 Flexible[mm²]	0.2~1.0		
材料 Material				
绝缘材料	Insulation Material	PA66		
阻燃等级	Flame retardant rating	UL94V-0		
导体材料	Conductor Material	Copper alloy		
导体表面镀层	Plating of conductor surface	Sn plated		
一般参数 Other Data				
间距/极数	Pitch/Poles [mm]/[P]	3.5/2*2~2*24		
剥线长度	Stripping Length [mm]	7~8		
螺丝/扭矩	Screw/Torque(Max)[N.m]	/		
工作温度	Operating temperature[℃]	-40~+105		
焊锡温度	Soldering temperature	/		
引针尺寸	Pin dimensions [mm]	/		
PCB板孔径	PCB Hole Diameter [mm]	/		

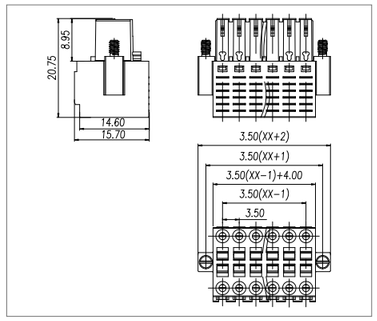

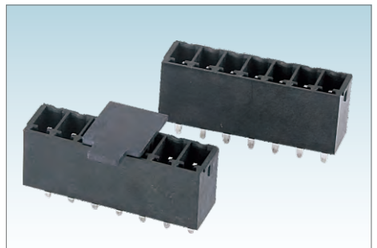

Pitch:3.5/3.81mm

WJ15EDGVC-THR-3.5/3.81

UL/CUL 技术参数 UL/CUL Technical Data				
等级	Use Group	B	C	D
额定电压	Rated Voltage [V]	300	-	300
额定电流	Rated Current [A]	8	-	8
接线范围 Wire Range	单芯线 Solid [AWG]	/		
	多芯线 Stranded [AWG]	/		
耐电压	Dielectric Voltage-Withstand	1.6KV		
IEC 技术参数 IEC Technical Data				
过电压类别	Overvoltage Category	Ⅲ	Ⅲ	Ⅱ
污染等级	Contamination Class	3	2	2
额定电压	Rated Voltage [V]	160	160	250
额定电流	Rated Current [A]	8	8	8
额定冲击电压	Impulse withstand voltage [KV]	2.5	2.5	2.5
导线截面积 Conductor cross section	硬质导线 Solid[mm²]	/		
	柔性导线 Flexible[mm²]	/		
材料 Material				
绝缘材料	Insulation Material	LCP		
阻燃等级	Flame retardant rating	UL94V-0		
导体材料	Conductor Material	Copper alloy		
导体表面镀层	Plating of conductor surface	Sn plated		
一般参数 Other Data				
间距/极数	Pitch/Poles [mm]/[P]	3.5,3.81/2~24		
剥线长度	Stripping Length [mm]	/		
螺丝/扭矩	Screw/Torque(Max)[N.m]	/		
工作温度	Operating temperature[℃]	-40~+130		
焊锡温度	Soldering temperature	285℃ /10S		
引针尺寸	Pin dimensions [mm]	0.8*0.8		
PCB板孔径	PCB Hole Diameter [mm]	∅1.4		

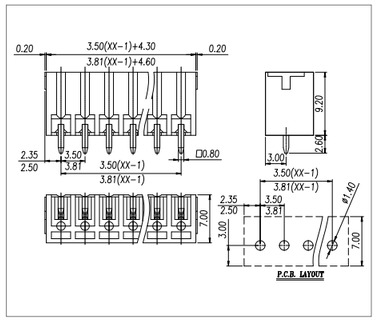



Pitch:3.5/3.81mm

WJ15EDGRC-THR-3.5/3.81

UL/CUL 技术参数 UL/CUL Technical Data				
等级	Use Group	B	C	D
额定电压	Rated Voltage [V]	300	-	300
额定电流	Rated Current [A]	8	-	8
接线范围 Wire Range	单芯线 Solid [AWG]	/		
	多芯线 Stranded [AWG]	/		
耐电压	Dielectric Voltage-Withstand	1.6KV		
IEC 技术参数 IEC Technical Data				
过电压类别	Overvoltage Category	Ⅲ	Ⅲ	Ⅱ
污染等级	Contamination Class	3	2	2
额定电压	Rated Voltage [V]	160	160	250
额定电流	Rated Current [A]	8	8	8
额定冲击电压	Impulse withstand voltage [KV]	2.5	2.5	2.5
导线截面积 Conductor cross section	硬质导线 Solid[mm²]	/		
	柔性导线 Flexible[mm²]	/		
材料 Material				
绝缘材料	Insulation Material	LCP		
阻燃等级	Flame retardant rating	UL94V-0		
导体材料	Conductor Material	Copper alloy		
导体表面镀层	Plating of conductor surface	Sn plated		
一般参数 Other Data				
间距/极数	Pitch/Poles [mm]/[P]	3.5,3.81/2~24		
剥线长度	Stripping Length [mm]	/		
螺丝/扭矩	Screw/Torque(Max)[N.m]	/		
工作温度	Operating temperature[℃]	-40~+130		
焊锡温度	Soldering temperature	285℃ /10S		
引针尺寸	Pin dimensions [mm]	0.8*0.8		
PCB板孔径	PCB Hole Diameter [mm]	∅1.4		

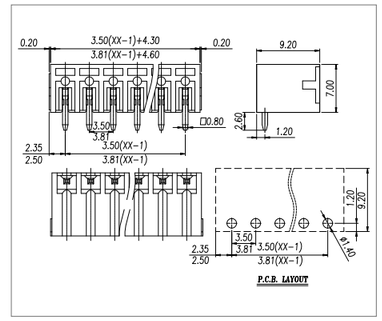

ISO14001 ISO45001 ISO9001 ISO80079-34 ISO/TS 22163

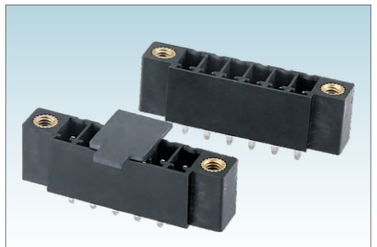

Pitch:3.5/3.81mm

WJ15EDGVM-THR-3.5/3.81

UL/CUL 技术参数 UL/CUL Technical Data				
等级	Use Group	B	C	D
额定电压	Rated Voltage [V]	300	-	300
额定电流	Rated Current [A]	8	-	8
接线范围 Wire Range	单芯线 Solid [AWG]	/		
	多芯线 Stranded [AWG]	/		
耐电压	Dielectric Voltage-Withstand	1.6KV		
IEC 技术参数 IEC Technical Data				
过电压类别	Overvoltage Category	Ⅲ	Ⅲ	Ⅱ
污染等级	Contamination Class	3	2	2
额定电压	Rated Voltage [V]	160	160	250
额定电流	Rated Current [A]	8	8	8
额定冲击电压	Impulse withstand voltage [KV]	2.5	2.5	2.5
导线截面积 Conductor cross section	硬质导线 Solid[mm²]	/		
	柔性导线 Flexible[mm²]	/		
材料 Material				
绝缘材料	Insulation Material	LCP		
阻燃等级	Flame retardant rating	UL94V-0		
导体材料	Conductor Material	Copper alloy		
导体表面镀层	Plating of conductor surface	Sn plated		
一般参数 Other Data				
间距/极数	Pitch/Poles [mm]/[P]	3.5,3.81/2~24		
剥线长度	Stripping Length [mm]	/		
螺丝/扭矩	Screw/Torque(Max)[N.m]	/		
工作温度	Operating temperature[℃]	-40~+130		
焊锡温度	Soldering temperature	285℃ /10S		
引针尺寸	Pin dimensions [mm]	0.8*0.8		
PCB板孔径	PCB Hole Diameter [mm]	∅1.4		

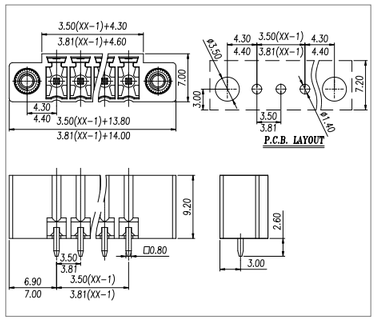



Pitch:3.5/3.81mm

WJ15EDGRM-THR-3.5/3.81

UL/CUL 技术参数 UL/CUL Technical Data				
等级	Use Group	B	C	D
额定电压	Rated Voltage [V]	300	-	300
额定电流	Rated Current [A]	8	-	8
接线范围 Wire Range	单芯线 Solid [AWG]	/		
	多芯线 Stranded [AWG]	/		
耐电压	Dielectric Voltage-Withstand	1.6KV		
IEC 技术参数 IEC Technical Data				
过电压类别	Overvoltage Category	Ⅲ	Ⅲ	Ⅱ
污染等级	Contamination Class	3	2	2
额定电压	Rated Voltage [V]	160	160	250
额定电流	Rated Current [A]	8	8	8
额定冲击电压	Impulse withstand voltage [KV]	2.5	2.5	2.5
导线截面积 Conductor cross section	硬质导线 Solid[mm²]	/		
	柔性导线 Flexible[mm²]	/		
材料 Material				
绝缘材料	Insulation Material	LCP		
阻燃等级	Flame retardant rating	UL94V-0		
导体材料	Conductor Material	Copper alloy		
导体表面镀层	Plating of conductor surface	Sn plated		
一般参数 Other Data				
间距/极数	Pitch/Poles [mm]/[P]	3.5,3.81/2~24		
剥线长度	Stripping Length [mm]	/		
螺丝/扭矩	Screw/Torque(Max)[N.m]	/		
工作温度	Operating temperature[℃]	-40~+130		
焊锡温度	Soldering temperature	285℃ /10S		
引针尺寸	Pin dimensions [mm]	0.8*0.8		
PCB板孔径	PCB Hole Diameter [mm]	∅1.4		

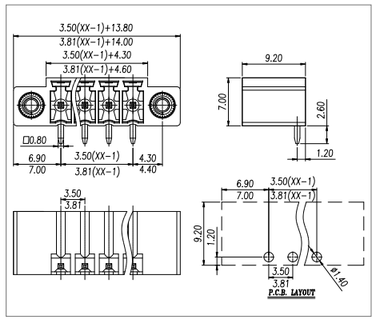



Pitch:3.5/3.81mm

WJ15EDGVHB-THT-3.5/3.81

UL/CUL 技术参数 UL/CUL Technical Data				
等级	Use Group	B	C	D
额定电压	Rated Voltage [V]	300	-	-
额定电流	Rated Current [A]	8	-	-
接线范围 Wire Range	单芯线 Solid [AWG]	/		
	多芯线 Stranded [AWG]	/		
耐电压	Dielectric Voltage-Withstand	1.6KV		
IEC 技术参数 IEC Technical Data				
过电压类别	Overvoltage Category	Ⅲ	Ⅲ	Ⅱ
污染等级	Contamination Class	3	2	2
额定电压	Rated Voltage [V]	160	160	250
额定电流	Rated Current [A]	8	8	8
额定冲击电压	Impulse withstand voltage [KV]	2.5	2.5	2.5
导线截面积 Conductor cross section	硬质导线 Solid[mm²]	/		
	柔性导线 Flexible[mm²]	/		
材料 Material				
绝缘材料	Insulation Material	LCP		
阻燃等级	Flame retardant rating	UL94V-0		
导体材料	Conductor Material	Copper alloy		
导体表面镀层	Plating of conductor surface	Sn plated		
一般参数 Other Data				
间距/极数	Pitch/Poles [mm]/[P]	3.5,3.81/2*2~2*24		
剥线长度	Stripping Length [mm]	/		
螺丝/扭矩	Screw/Torque(Max)[N.m]	/		
工作温度	Operating temperature[℃]	-40~+130		
焊锡温度	Soldering temperature	285℃ /10S		
引针尺寸	Pin dimensions [mm]	0.8*0.8		
PCB板孔径	PCB Hole Diameter [mm]	∅1.4		

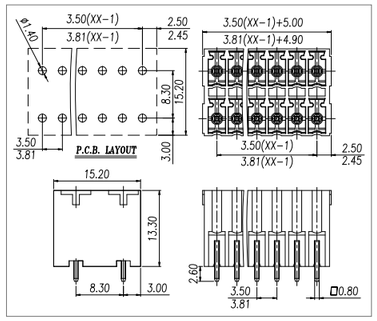



Pitch:3.5/3.81mm

WJ15EDGRHB-THT-3.5/3.81

UL/CUL 技术参数 UL/CUL Technical Data				
等级	Use Group	B	C	D
额定电压	Rated Voltage [V]	300	-	-
额定电流	Rated Current [A]	8	-	-
接线范围 Wire Range	单芯线 Solid [AWG]	/		
	多芯线 Stranded [AWG]	/		
耐电压	Dielectric Voltage-Withstand	1.6KV		
IEC 技术参数 IEC Technical Data				
过电压类别	Overvoltage Category	Ⅲ	Ⅲ	Ⅱ
污染等级	Contamination Class	3	2	2
额定电压	Rated Voltage [V]	160	160	250
额定电流	Rated Current [A]	8	8	8
额定冲击电压	Impulse withstand voltage [KV]	2.5	2.5	2.5
导线截面积 Conductor cross section	硬质导线 Solid[mm²]	/		
	柔性导线 Flexible[mm²]	/		
材料 Material				
绝缘材料	Insulation Material	LCP		
阻燃等级	Flame retardant rating	UL94V-0		
导体材料	Conductor Material	Copper alloy		
导体表面镀层	Plating of conductor surface	Sn plated		
一般参数 Other Data				
间距/极数	Pitch/Poles [mm]/[P]	3.5,3.81/2*2~2*24		
剥线长度	Stripping Length [mm]	/		
螺丝/扭矩	Screw/Torque(Max)[N.m]	/		
工作温度	Operating temperature[℃]	-40~+130		
焊锡温度	Soldering temperature	285℃ /10S		
引针尺寸	Pin dimensions [mm]	0.8*0.8		
PCB板孔径	PCB Hole Diameter [mm]	∅1.4		

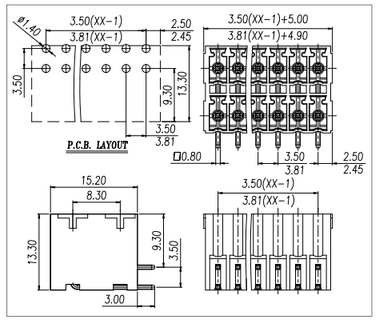



Pitch:3.5/3.81mm

WJ15EDGVHBM-THT-3.5/3.81

UL/CUL 技术参数 UL/CUL Technical Data				
等级	Use Group	B	C	D
额定电压	Rated Voltage [V]	300	-	-
额定电流	Rated Current [A]	8	-	-
接线范围 Wire Range	单芯线 Solid [AWG]	/		
	多芯线 Stranded [AWG]	/		
耐电压	Dielectric Voltage-Withstand	1.6KV		
IEC 技术参数 IEC Technical Data				
过电压类别	Overvoltage Category	Ⅲ	Ⅲ	Ⅱ
污染等级	Contamination Class	3	2	2
额定电压	Rated Voltage [V]	160	160	250
额定电流	Rated Current [A]	8	8	8
额定冲击电压	Impulse withstand voltage [KV]	2.5	2.5	2.5
导线截面积 Conductor cross section	硬质导线 Solid[mm²]	/		
	柔性导线 Flexible[mm²]	/		
材料 Material				
绝缘材料	Insulation Material	LCP		
阻燃等级	Flame retardant rating	UL94V-0		
导体材料	Conductor Material	Copper alloy		
导体表面镀层	Plating of conductor surface	Sn plated		
一般参数 Other Data				
间距/极数	Pitch/Poles [mm]/[P]	3.5,3.81/2*2~2*24		
剥线长度	Stripping Length [mm]	/		
螺丝/扭矩	Screw/Torque(Max)[N.m]	/		
工作温度	Operating temperature[℃]	-40~+130		
焊锡温度	Soldering temperature	285℃ /10S		
引针尺寸	Pin dimensions [mm]	0.8*0.8		
PCB板孔径	PCB Hole Diameter [mm]	∅1.4		

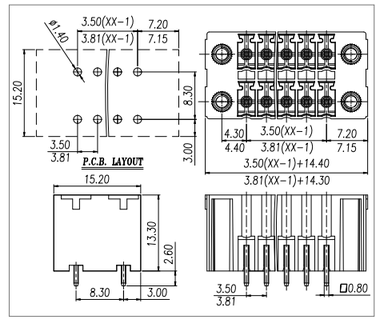



Pitch:3.5/3.81mm

WJ15EDGRHBM-THT-3.5/3.81

UL/CUL 技术参数 UL/CUL Technical Data				
等级	Use Group	B	C	D
额定电压	Rated Voltage [V]	300	-	-
额定电流	Rated Current [A]	8	-	-
接线范围 Wire Range	单芯线 Solid [AWG]	/		
	多芯线 Stranded [AWG]	/		
耐电压	Dielectric Voltage-Withstand	1.6KV		
IEC 技术参数 IEC Technical Data				
过电压类别	Overvoltage Category	Ⅲ	Ⅲ	Ⅱ
污染等级	Contamination Class	3	2	2
额定电压	Rated Voltage [V]	160	160	250
额定电流	Rated Current [A]	8	8	8
额定冲击电压	Impulse withstand voltage [KV]	2.5	2.5	2.5
导线截面积 Conductor cross section	硬质导线 Solid[mm²]	/		
	柔性导线 Flexible[mm²]	/		
材料 Material				
绝缘材料	Insulation Material	LCP		
阻燃等级	Flame retardant rating	UL94V-0		
导体材料	Conductor Material	Copper alloy		
导体表面镀层	Plating of conductor surface	Sn plated		
一般参数 Other Data				
间距/极数	Pitch/Poles [mm]/[P]	3.5,3.81/2*2~2*24		
剥线长度	Stripping Length [mm]	/		
螺丝/扭矩	Screw/Torque(Max)[N.m]	/		
工作温度	Operating temperature[℃]	-40~+130		
焊锡温度	Soldering temperature	285℃ /10S		
引针尺寸	Pin dimensions [mm]	0.8*0.8		
PCB板孔径	PCB Hole Diameter [mm]	∅1.4		

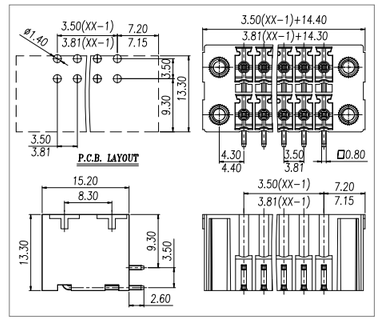

ISO14001 ISO45001 ISO9001 ISO80079-34 ISO/TS 22163



Pitch:3.5/3.81mm

WJ15EDGVHBN-THT-3.5/3.81

UL/CUL 技术参数 UL/CUL Technical Data				
等级	Use Group	B	C	D
额定电压	Rated Voltage [V]	300	-	-
额定电流	Rated Current [A]	8	-	-
接线范围 Wire Range	单芯线 Solid [AWG]	/		
	多芯线 Stranded [AWG]	/		
耐电压	Dielectric Voltage-Withstand	1.6KV		
IEC 技术参数 IEC Technical Data				
过电压类别	Overvoltage Category	Ⅲ	Ⅲ	Ⅱ
污染等级	Contamination Class	3	2	2
额定电压	Rated Voltage [V]	160	160	250
额定电流	Rated Current [A]	8	8	8
额定冲击电压	Impulse withstand voltage [KV]	2.5	2.5	2.5
导线截面积 Conductor cross section	硬质导线 Solid[mm²]	/		
	柔性导线 Flexible[mm²]	/		
材料 Material				
绝缘材料	Insulation Material	LCP		
阻燃等级	Flame retardant rating	UL94V-0		
导体材料	Conductor Material	Copper alloy		
导体表面镀层	Plating of conductor surface	Sn plated		
一般参数 Other Data				
间距/极数	Pitch/Poles [mm]/[P]	3.5,3.81/ 2*2~2*24		
剥线长度	Stripping Length [mm]	/		
螺丝/扭矩	Screw/Torque(Max)[N.m]	/		
工作温度	Operating temperature[℃]	-40~+130		
焊锡温度	Soldering temperature	285℃ /10S		
引针尺寸	Pin dimensions [mm]	0.8*0.8		
PCB板孔径	PCB Hole Diameter [mm]	∅1.4		

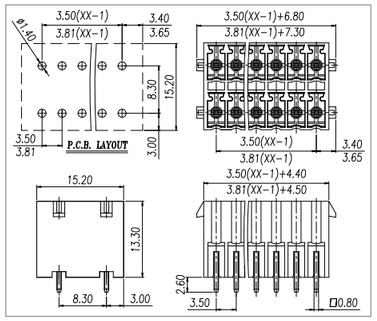

Pitch:3.5/3.81mm

WJ15EDGRHBN-THT-3.5/3.81

UL/CUL 技术参数 UL/CUL Technical Data				
等级	Use Group	B	C	D
额定电压	Rated Voltage [V]	300	-	-
额定电流	Rated Current [A]	8	-	-
接线范围 Wire Range	单芯线 Solid [AWG]	/		
	多芯线 Stranded [AWG]	/		
耐电压	Dielectric Voltage-Withstand	1.6KV		
IEC 技术参数 IEC Technical Data				
过电压类别	Overvoltage Category	Ⅲ	Ⅲ	Ⅱ
污染等级	Contamination Class	3	2	2
额定电压	Rated Voltage [V]	160	160	250
额定电流	Rated Current [A]	8	8	8
额定冲击电压	Impulse withstand voltage [KV]	2.5	2.5	2.5
导线截面积 Conductor cross section	硬质导线 Solid[mm²]	/		
	柔性导线 Flexible[mm²]	/		
材料 Material				
绝缘材料	Insulation Material	LCP		
阻燃等级	Flame retardant rating	UL94V-0		
导体材料	Conductor Material	Copper alloy		
导体表面镀层	Plating of conductor surface	Sn plated		
一般参数 Other Data				
间距/极数	Pitch/Poles [mm]/[P]	3.5,3.81/ 2*2~2*24		
剥线长度	Stripping Length [mm]	/		
螺丝/扭矩	Screw/Torque(Max)[N.m]	/		
工作温度	Operating temperature[℃]	-40~+130		
焊锡温度	Soldering temperature	285℃ /10S		
引针尺寸	Pin dimensions [mm]	0.8*0.8		
PCB板孔径	PCB Hole Diameter [mm]	∅1.4		

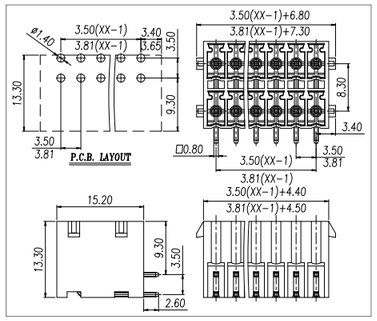



Pitch:3.5 mm

WJ15EDGVHC-THR-3.5

UL/CUL 技术参数 UL/CUL Technical Data				
等级	Use Group	B	C	D
额定电压	Rated Voltage [V]	300	-	300
额定电流	Rated Current [A]	8	-	8
接线范围 Wire Range	单芯线 Solid [AWG]	/		
	多芯线 Stranded [AWG]	/		
耐电压	Dielectric Voltage-Withstand	1.6KV		
IEC 技术参数 IEC Technical Data				
过电压类别	Overvoltage Category	Ⅲ	Ⅲ	Ⅱ
污染等级	Contamination Class	3	2	2
额定电压	Rated Voltage [V]	160	160	250
额定电流	Rated Current [A]	8	8	8
额定冲击电压	Impulse withstand voltage [KV]	2.5	2.5	2.5
导线截面积 Conductor cross section	硬质导线 Solid[mm²]	/		
	柔性导线 Flexible[mm²]	/		
材料 Material				
绝缘材料	Insulation Material	LCP		
阻燃等级	Flame retardant rating	UL94V-0		
导体材料	Conductor Material	Copper alloy		
导体表面镀层	Plating of conductor surface	Sn plated		
一般参数 Other Data				
间距/极数	Pitch/Poles [mm]/[P]	3.5/2*2~2*24		
剥线长度	Stripping Length [mm]	/		
螺丝/扭矩	Screw/Torque(Max)[N.m]	/		
工作温度	Operating temperature[℃]	-40~+130		
焊锡温度	Soldering temperature	285℃ /10S		
引针尺寸	Pin dimensions [mm]	0.8*0.8		
PCB板孔径	PCB Hole Diameter [mm]	∅1.4		

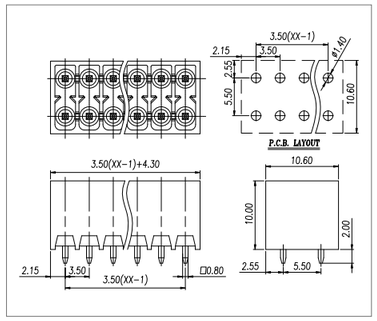



Pitch:3.5 mm

WJ15EDGVHCM-THR-3.5

UL/CUL 技术参数 UL/CUL Technical Data				
等级	Use Group	B	C	D
额定电压	Rated Voltage [V]	300	-	300
额定电流	Rated Current [A]	8	-	8
接线范围 Wire Range	单芯线 Solid [AWG]	/		
	多芯线 Stranded [AWG]	/		
耐电压	Dielectric Voltage-Withstand	1.6KV		
IEC 技术参数 IEC Technical Data				
过电压类别	Overvoltage Category	Ⅲ	Ⅲ	Ⅱ
污染等级	Contamination Class	3	2	2
额定电压	Rated Voltage [V]	160	160	250
额定电流	Rated Current [A]	8	8	8
额定冲击电压	Impulse withstand voltage [KV]	2.5	2.5	2.5
导线截面积 Conductor cross section	硬质导线 Solid[mm²]	/		
	柔性导线 Flexible[mm²]	/		
材料 Material				
绝缘材料	Insulation Material	LCP		
阻燃等级	Flame retardant rating	UL94V-0		
导体材料	Conductor Material	Copper alloy		
导体表面镀层	Plating of conductor surface	Sn plated		
一般参数 Other Data				
间距/极数	Pitch/Poles [mm]/[P]	3.5/2*2~2*24		
剥线长度	Stripping Length [mm]	/		
螺丝/扭矩	Screw/Torque(Max)[N.m]	/		
工作温度	Operating temperature[℃]	-40~+130		
焊锡温度	Soldering temperature	285℃ /10S		
引针尺寸	Pin dimensions [mm]	0.8*0.8		
PCB板孔径	PCB Hole Diameter [mm]	∅1.4		

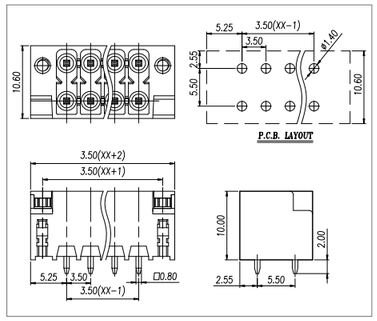

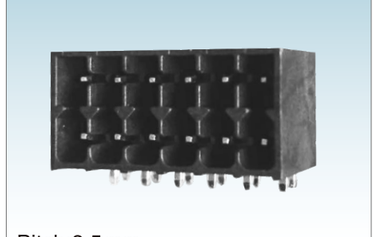

Pitch:3.5 mm

WJ15EDGRHC-THR-3.5

UL/CUL 技术参数 UL/CUL Technical Data				
等级	Use Group	B	C	D
额定电压	Rated Voltage [V]	150	-	150
额定电流	Rated Current [A]	8	-	8
接线范围 Wire Range	单芯线 Solid [AWG]	/		
	多芯线 Stranded [AWG]	/		
耐电压	Dielectric Voltage-Withstand	1.3KV		
IEC 技术参数 IEC Technical Data				
过电压类别	Overvoltage Category	Ⅲ	Ⅲ	Ⅱ
污染等级	Contamination Class	3	2	2
额定电压	Rated Voltage [V]	160	160	250
额定电流	Rated Current [A]	8	8	8
额定冲击电压	Impulse withstand voltage [KV]	2.5	2.5	2.5
导线截面积 Conductor cross section	硬质导线 Solid[mm²]	/		
	柔性导线 Flexible[mm²]	/		
材料 Material				
绝缘材料	Insulation Material	LCP		
阻燃等级	Flame retardant rating	UL94V-0		
导体材料	Conductor Material	Copper alloy		
导体表面镀层	Plating of conductor surface	Sn plated		
一般参数 Other Data				
间距/极数	Pitch/Poles [mm]/[P]	3.5/2*2~2*24		
剥线长度	Stripping Length [mm]	/		
螺丝/扭矩	Screw/Torque(Max)[N.m]	/		
工作温度	Operating temperature[℃]	-40~+130		
焊锡温度	Soldering temperature	285℃ /10S		
引针尺寸	Pin dimensions [mm]	0.8*0.8		
PCB板孔径	PCB Hole Diameter [mm]	∅1.4		

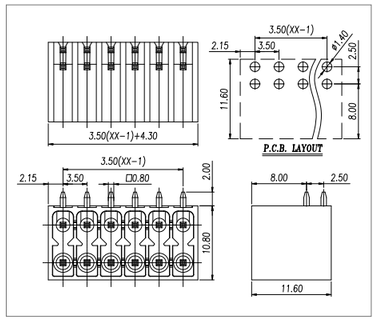



Pitch:3.5 mm

WJ15EDGRHCM-THR-3.5

UL/CUL 技术参数 UL/CUL Technical Data				
等级	Use Group	B	C	D
额定电压	Rated Voltage [V]	150	-	150
额定电流	Rated Current [A]	8	-	8
接线范围 Wire Range	单芯线 Solid [AWG]	/		
	多芯线 Stranded [AWG]	/		
耐电压	Dielectric Voltage-Withstand	1.3KV		
IEC 技术参数 IEC Technical Data				
过电压类别	Overvoltage Category	Ⅲ	Ⅲ	Ⅱ
污染等级	Contamination Class	3	2	2
额定电压	Rated Voltage [V]	160	160	250
额定电流	Rated Current [A]	8	8	8
额定冲击电压	Impulse withstand voltage [KV]	2.5	2.5	2.5
导线截面积 Conductor cross section	硬质导线 Solid[mm²]	/		
	柔性导线 Flexible[mm²]	/		
材料 Material				
绝缘材料	Insulation Material	LCP		
阻燃等级	Flame retardant rating	UL94V-0		
导体材料	Conductor Material	Copper alloy		
导体表面镀层	Plating of conductor surface	Sn plated		
一般参数 Other Data				
间距/极数	Pitch/Poles [mm]/[P]	3.5/2*2~2*24		
剥线长度	Stripping Length [mm]	/		
螺丝/扭矩	Screw/Torque(Max)[N.m]	/		
工作温度	Operating temperature[℃]	-40~+130		
焊锡温度	Soldering temperature	285℃ /10S		
引针尺寸	Pin dimensions [mm]	0.8*0.8		
PCB板孔径	PCB Hole Diameter [mm]	∅1.4		

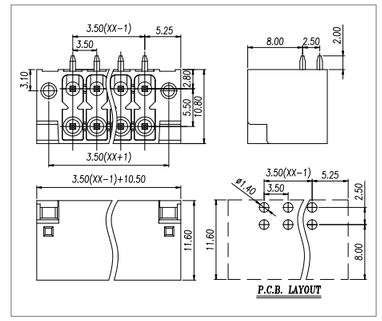

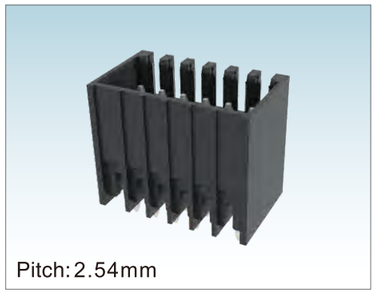

Pitch: 2.54mm

WJ15EDGVHSC-THR-2.54

UL/CUL 技术参数 UL/CUL Technical Data				
等级	Use Group	B	C	D
额定电压	Rated Voltage [V]	150	-	-
额定电流	Rated Current [A]	5	-	-
接线范围 Wire Range	单芯线 Solid [AWG]	/		
	多芯线 Stranded [AWG]	/		
耐电压	Dielectric Voltage-Withstand	1.3KV		
IEC 技术参数 IEC Technical Data				
过电压类别	Surge voltage category	Ⅲ	Ⅲ	Ⅱ
污染等级	Contamination Class	3	2	2
额定电压	Rated Voltage [V]	80	160	320
额定电流	Rated Current [A]	6	6	6
额定冲击电压	Impulse withstand voltage [KV]	2.5	2.5	2.5
导线截面积 Conductor cross section	硬质导线 Solid[mm²]	/		
	柔性导线 Flexible[mm²]	/		
材料 Material				
绝缘材料	Insulation Material	LCP		
阻燃等级	Inflammability Class	UL94V-0		
导体材料	Conductor Material	Copper alloy		
导体表面镀层	Conductor Plating	Sn plated		
一般参数 Other Data				
间距/极数	Pitch/Poles [mm]/[P]	2.54/2*2~2*24		
剥线长度	Stripping Length [mm]	/		
螺丝/扭矩	Screw/Torque(Max)[N.m]	/		
工作温度	Operating temperature[℃]	-40~+130		
焊锡温度	Soldering temperature	285℃/10S		
引针尺寸	Pin dimensions [mm]	0.8*0.8		
PCB板孔径	PCB Hole Diameter [mm]	∅1.4		

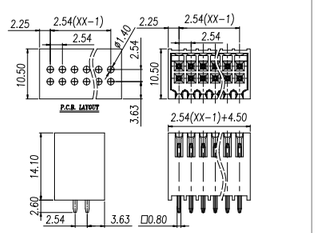

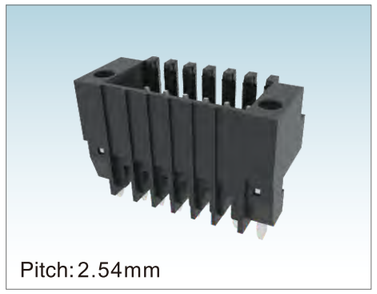

Pitch: 2.54mm

WJ15EDGVHSM-THR-2.54

UL/CUL 技术参数 UL/CUL Technical Data				
等级	Use Group	B	C	D
额定电压	Rated Voltage [V]	150	-	-
额定电流	Rated Current [A]	5	-	-
接线范围 Wire Range	单芯线 Solid [AWG]	/		
	多芯线 Stranded [AWG]	/		
耐电压	Dielectric Voltage-Withstand	1.3KV		
IEC 技术参数 IEC Technical Data				
过电压类别	Surge voltage category	Ⅲ	Ⅲ	Ⅱ
污染等级	Contamination Class	3	2	2
额定电压	Rated Voltage [V]	80	160	320
额定电流	Rated Current [A]	6	6	6
额定冲击电压	Impulse withstand voltage [KV]	2.5	2.5	2.5
导线截面积 Conductor cross section	硬质导线 Solid[mm²]	/		
	柔性导线 Flexible[mm²]	/		
材料 Material				
绝缘材料	Insulation Material	LCP		
阻燃等级	Inflammability Class	UL94V-0		
导体材料	Conductor Material	Copper alloy		
导体表面镀层	Conductor Plating	Sn plated		
一般参数 Other Data				
间距/极数	Pitch/Poles [mm]/[P]	2.54/2*2~2*24		
剥线长度	Stripping Length [mm]	/		
螺丝/扭矩	Screw/Torque(Max)[N.m]	/		
工作温度	Operating temperature[℃]	-40~+130		
焊锡温度	Soldering temperature	285℃/10S		
引针尺寸	Pin dimensions [mm]	0.8*0.8		
PCB板孔径	PCB Hole Diameter [mm]	∅1.4		

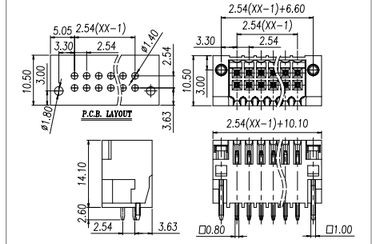

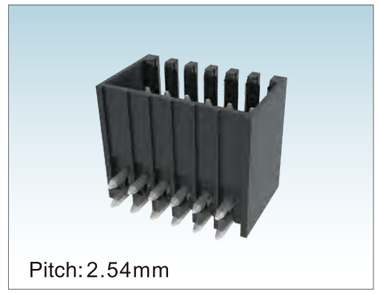

Pitch: 2.54mm

WJ15EDGRHSC-THR-2.54

UL/CUL 技术参数 UL/CUL Technical Data				
等级	Use Group	B	C	D
额定电压	Rated Voltage [V]	150	-	-
额定电流	Rated Current [A]	5	-	-
接线范围 Wire Range	单芯线 Solid [AWG]	/		
	多芯线 Stranded [AWG]	/		
耐电压	Dielectric Voltage-Withstand	1.3KV		
IEC 技术参数 IEC Technical Data				
过电压类别	Surge voltage category	Ⅲ	Ⅲ	Ⅱ
污染等级	Contamination Class	3	2	2
额定电压	Rated Voltage [V]	80	160	320
额定电流	Rated Current [A]	6	6	6
额定冲击电压	Impulse withstand voltage [KV]	2.5	2.5	2.5
导线截面积 Conductor cross section	硬质导线 Solid[mm²]	/		
	柔性导线 Flexible[mm²]	/		
材料 Material				
绝缘材料	Insulation Material	LCP		
阻燃等级	Inflammability Class	UL94V-0		
导体材料	Conductor Material	Copper alloy		
导体表面镀层	Conductor Plating	Sn plated		
一般参数 Other Data				
间距/极数	Pitch/Poles [mm]/[P]	2.54/2*2~2*24		
剥线长度	Stripping Length [mm]	/		
螺丝/扭矩	Screw/Torque(Max)[N.m]	/		
工作温度	Operating temperature[℃]	-40~+130		
焊锡温度	Soldering temperature	285℃/10S		
引针尺寸	Pin dimensions [mm]	0.8*0.8		
PCB板孔径	PCB Hole Diameter [mm]	∅1.4		

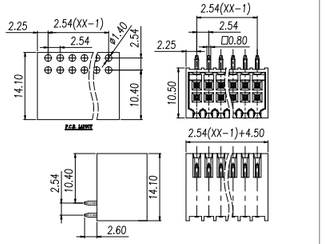

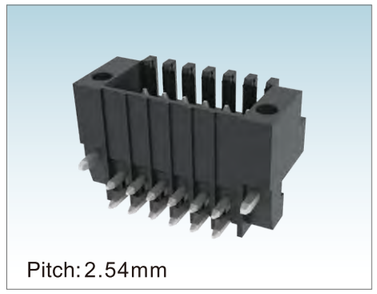

Pitch: 2.54mm

WJ15EDGRHSM-THR-2.54

UL/CUL 技术参数 UL/CUL Technical Data				
等级	Use Group	B	C	D
额定电压	Rated Voltage [V]	150	-	-
额定电流	Rated Current [A]	5	-	-
接线范围 Wire Range	单芯线 Solid [AWG]	/		
	多芯线 Stranded [AWG]	/		
耐电压	Dielectric Voltage-Withstand	1.3KV		
IEC 技术参数 IEC Technical Data				
过电压类别	Surge voltage category	Ⅲ	Ⅲ	Ⅱ
污染等级	Contamination Class	3	2	2
额定电压	Rated Voltage [V]	80	160	320
额定电流	Rated Current [A]	6	6	6
额定冲击电压	Impulse withstand voltage [KV]	2.5	2.5	2.5
导线截面积 Conductor cross section	硬质导线 Solid[mm²]	/		
	柔性导线 Flexible[mm²]	/		
材料 Material				
绝缘材料	Insulation Material	LCP		
阻燃等级	Inflammability Class	UL94V-0		
导体材料	Conductor Material	Copper alloy		
导体表面镀层	Conductor Plating	Sn plated		
一般参数 Other Data				
间距/极数	Pitch/Poles [mm]/[P]	2.54/2*2~2*24		
剥线长度	Stripping Length [mm]	/		
螺丝/扭矩	Screw/Torque(Max)[N.m]	/		
工作温度	Operating temperature[℃]	-40~+130		
焊锡温度	Soldering temperature	285℃/10S		
引针尺寸	Pin dimensions [mm]	0.8*0.8		
PCB板孔径	PCB Hole Diameter [mm]	∅1.4		

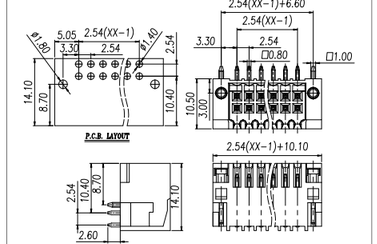

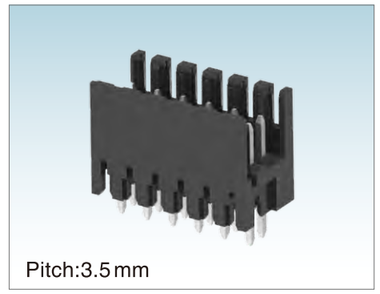

Pitch: 3.5mm

WJ15EDGVHS-THR-3.5

UL/CUL 技术参数 UL/CUL Technical Data				
等级	Use Group	B	C	D
额定电压	Rated Voltage [V]	150	-	-
额定电流	Rated Current [A]	7	-	-
接线范围 Wire Range	单芯线 Solid [AWG]	/		
	多芯线 Stranded [AWG]	/		
耐电压	Dielectric Voltage-Withstand	1.3KV		
IEC 技术参数 IEC Technical Data				
过电压类别	Surge voltage category	Ⅲ	Ⅲ	Ⅱ
污染等级	Contamination Class	3	2	2
额定电压	Rated Voltage [V]	80	125	250
额定电流	Rated Current [A]	10	10	10
额定冲击电压	Impulse withstand voltage [KV]	2.5	2.5	2.5
导线截面积 Conductor cross section	硬质导线 Solid[mm²]	/		
	柔性导线 Flexible[mm²]	/		
材料 Material				
绝缘材料	Insulation Material	LCP		
阻燃等级	Inflammability Class	UL94V-0		
导体材料	Conductor Material	Copper alloy		
导体表面镀层	Conductor Plating	Sn plated		
一般参数 Other Data				
间距/极数	Pitch/Poles [mm]/[P]	3.5/2*2~2*24		
剥线长度	Stripping Length [mm]	/		
螺丝/扭矩	Screw/Torque(Max)[N.m]	/		
工作温度	Operating temperature[℃]	-40~+130		
焊锡温度	Soldering temperature	285℃/10S		
引针尺寸	Pin dimensions [mm]	0.8*0.8		
PCB板孔径	PCB Hole Diameter [mm]	∅1.4		

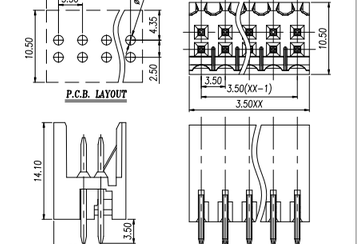

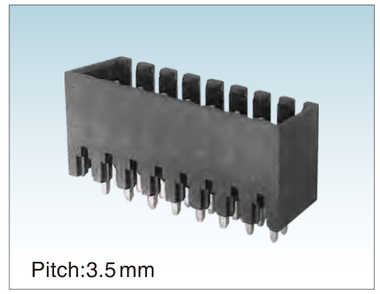

Pitch: 3.5mm

WJ15EDGVHSC-THR-3.5

UL/CUL 技术参数 UL/CUL Technical Data				
等级	Use Group	B	C	D
额定电压	Rated Voltage [V]	150	-	-
额定电流	Rated Current [A]	7	-	-
接线范围 Wire Range	单芯线 Solid [AWG]	/		
	多芯线 Stranded [AWG]	/		
耐电压	Dielectric Voltage-Withstand	1.3KV		
IEC 技术参数 IEC Technical Data				
过电压类别	Surge voltage category	Ⅲ	Ⅲ	Ⅱ
污染等级	Contamination Class	3	2	2
额定电压	Rated Voltage [V]	80	125	250
额定电流	Rated Current [A]	10	10	10
额定冲击电压	Impulse withstand voltage [KV]	2.5	2.5	2.5
导线截面积 Conductor cross section	硬质导线 Solid[mm²]	/		
	柔性导线 Flexible[mm²]	/		
材料 Material				
绝缘材料	Insulation Material	LCP		
阻燃等级	Inflammability Class	UL94V-0		
导体材料	Conductor Material	Copper alloy		
导体表面镀层	Conductor Plating	Sn plated		
一般参数 Other Data				
间距/极数	Pitch/Poles [mm]/[P]	3.5/2*2~2*24		
剥线长度	Stripping Length [mm]	/		
螺丝/扭矩	Screw/Torque(Max)[N.m]	/		
工作温度	Operating temperature[℃]	-40~+130		
焊锡温度	Soldering temperature	285℃/10S		
引针尺寸	Pin dimensions [mm]	0.8*0.8		
PCB板孔径	PCB Hole Diameter [mm]	∅1.4		

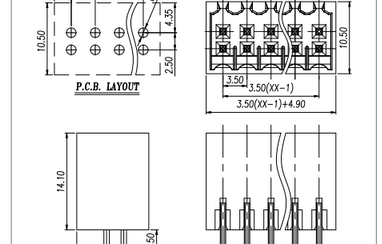

ISO14001 ISO45001 ISO9001 ISO80079-34 ISO/TS 22163

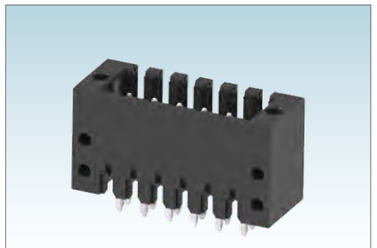

Pitch:3.5 mm

WJ15EDGVHSM-THR-3.5

UL/CUL 技术参数 UL/CUL Technical Data				
等级	Use Group	B	C	D
额定电压	Rated Voltage [V]	150	-	-
额定电流	Rated Current [A]	7	-	-
接线范围 Wire Range	单芯线 Solid [AWG]	/		
	多芯线 Stranded [AWG]	/		
耐电压	Dielectric Voltage-Withstand	1.3KV		

IEC 技术参数 IEC Technical Data				
过电压类别	Surge voltage category	Ⅲ	Ⅲ	Ⅱ
污染等级	Contamination Class	3	2	2
额定电压	Rated Voltage [V]	80	125	250
额定电流	Rated Current [A]	10	10	10
额定冲击电压	Impulse withstand voltage [KV]	2.5	2.5	2.5
导线截面积 Conductor cross section	硬质导线 Solid[mm²]	/		
	柔性导线 Flexible[mm²]	/		

材料 Material		
绝缘材料	Insulation Material	LCP
阻燃等级	Inflammability Class	UL94V-0
导体材料	Conductor Material	Copper alloy
导体表面镀层	Conductor Plating	Sn plated

一般参数 Other Data		
间距/极数	Pitch/Poles [mm]/[P]	3.5/2*2~2*24
剥线长度	Stripping Length [mm]	/
螺丝/扭矩	Screw/Torque(Max)[N.m]	/
工作温度	Operating temperature[℃]	-40~+130
焊锡温度	Soldering temperature	285℃/10S
引针尺寸	Pin dimensions [mm]	0.8*0.8
PCB板孔径	PCB Hole Diameter [mm]	∅1.4

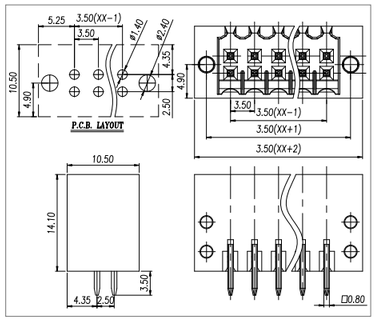

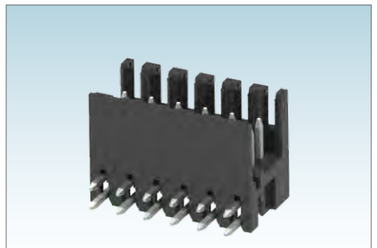

Pitch:3.5 mm

WJ15EDGRHS-THR-3.5

UL/CUL 技术参数 UL/CUL Technical Data				
等级	Use Group	B	C	D
额定电压	Rated Voltage [V]	150	-	-
额定电流	Rated Current [A]	7	-	-
接线范围 Wire Range	单芯线 Solid [AWG]	/		
	多芯线 Stranded [AWG]	/		
耐电压	Dielectric Voltage-Withstand	1.3KV		

IEC 技术参数 IEC Technical Data				
过电压类别	Surge voltage category	Ⅲ	Ⅲ	Ⅱ
污染等级	Contamination Class	3	2	2
额定电压	Rated Voltage [V]	80	125	250
额定电流	Rated Current [A]	10	10	10
额定冲击电压	Impulse withstand voltage [KV]	2.5	2.5	2.5
导线截面积 Conductor cross section	硬质导线 Solid[mm²]	/		
	柔性导线 Flexible[mm²]	/		

材料 Material		
绝缘材料	Insulation Material	LCP
阻燃等级	Inflammability Class	UL94V-0
导体材料	Conductor Material	Copper alloy
导体表面镀层	Conductor Plating	Sn plated

一般参数 Other Data		
间距/极数	Pitch/Poles [mm]/[P]	3.5/2*2~2*24
剥线长度	Stripping Length [mm]	/
螺丝/扭矩	Screw/Torque(Max)[N.m]	/
工作温度	Operating temperature[℃]	-40~+130
焊锡温度	Soldering temperature	285℃/10S
引针尺寸	Pin dimensions [mm]	0.8*0.8
PCB板孔径	PCB Hole Diameter [mm]	∅1.4

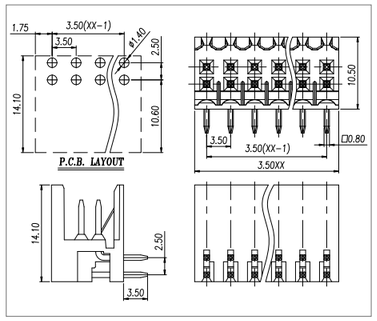

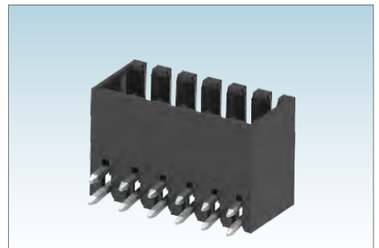

Pitch:3.5 mm

WJ15EDGRHSC-THR-3.5

UL/CUL 技术参数 UL/CUL Technical Data				
等级	Use Group	B	C	D
额定电压	Rated Voltage [V]	150	-	-
额定电流	Rated Current [A]	7	-	-
接线范围 Wire Range	单芯线 Solid [AWG]	/		
	多芯线 Stranded [AWG]	/		
耐电压	Dielectric Voltage-Withstand	1.3KV		

IEC 技术参数 IEC Technical Data				
过电压类别	Surge voltage category	Ⅲ	Ⅲ	Ⅱ
污染等级	Contamination Class	3	2	2
额定电压	Rated Voltage [V]	80	125	250
额定电流	Rated Current [A]	10	10	10
额定冲击电压	Impulse withstand voltage [KV]	2.5	2.5	2.5
导线截面积 Conductor cross section	硬质导线 Solid[mm²]	/		
	柔性导线 Flexible[mm²]	/		

材料 Material		
绝缘材料	Insulation Material	LCP
阻燃等级	Inflammability Class	UL94V-0
导体材料	Conductor Material	Copper alloy
导体表面镀层	Conductor Plating	Sn plated

一般参数 Other Data		
间距/极数	Pitch/Poles [mm]/[P]	3.5/2*2~2*24
剥线长度	Stripping Length [mm]	/
螺丝/扭矩	Screw/Torque(Max)[N.m]	/
工作温度	Operating temperature[℃]	-40~+130
焊锡温度	Soldering temperature	285℃/10S
引针尺寸	Pin dimensions [mm]	0.8*0.8
PCB板孔径	PCB Hole Diameter [mm]	∅1.4

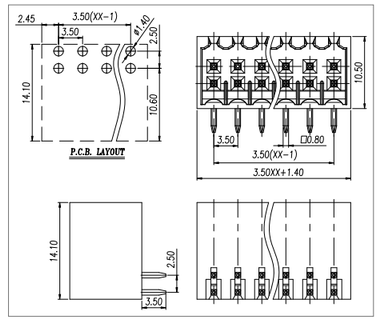

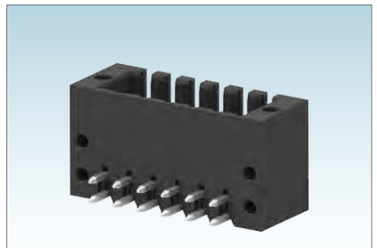

Pitch:3.5 mm

WJ15EDGRHSM-THR-3.5

UL/CUL 技术参数 UL/CUL Technical Data				
等级	Use Group	B	C	D
额定电压	Rated Voltage [V]	150	-	-
额定电流	Rated Current [A]	7	-	-
接线范围 Wire Range	单芯线 Solid [AWG]	/		
	多芯线 Stranded [AWG]	/		
耐电压	Dielectric Voltage-Withstand	1.3KV		

IEC 技术参数 IEC Technical Data				
过电压类别	Surge voltage category	Ⅲ	Ⅲ	Ⅱ
污染等级	Contamination Class	3	2	2
额定电压	Rated Voltage [V]	80	125	250
额定电流	Rated Current [A]	10	10	10
额定冲击电压	Impulse withstand voltage [KV]	2.5	2.5	2.5
导线截面积 Conductor cross section	硬质导线 Solid[mm²]	/		
	柔性导线 Flexible[mm²]	/		

材料 Material		
绝缘材料	Insulation Material	LCP
阻燃等级	Inflammability Class	UL94V-0
导体材料	Conductor Material	Copper alloy
导体表面镀层	Conductor Plating	Sn plated

一般参数 Other Data		
间距/极数	Pitch/Poles [mm]/[P]	3.5/2*2~2*24
剥线长度	Stripping Length [mm]	/
螺丝/扭矩	Screw/Torque(Max)[N.m]	/
工作温度	Operating temperature[℃]	-40~+130
焊锡温度	Soldering temperature	285℃/10S
引针尺寸	Pin dimensions [mm]	0.8*0.8
PCB板孔径	PCB Hole Diameter [mm]	∅1.4

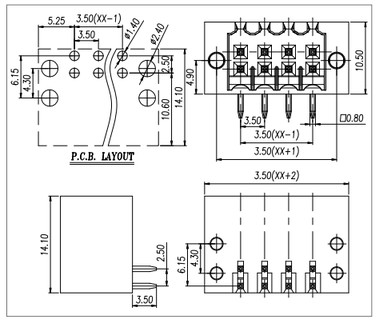

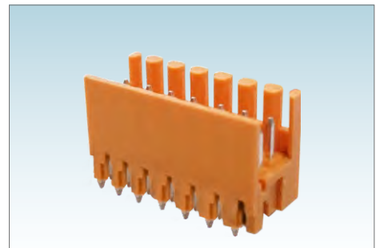

Pitch:3.5 mm

WJ15EDGVHS-3.5

UL/CUL 技术参数 UL/CUL Technical Data				
等级	Use Group	B	C	D
额定电压	Rated Voltage [V]	150	-	-
额定电流	Rated Current [A]	7	-	-
接线范围 Wire Range	单芯线 Solid [AWG]	/		
	多芯线 Stranded [AWG]	/		
耐电压	Dielectric Voltage-Withstand	1.3KV		

IEC 技术参数 IEC Technical Data				
过电压类别	Surge voltage category	Ⅲ	Ⅲ	Ⅱ
污染等级	Contamination Class	3	2	2
额定电压	Rated Voltage [V]	80	125	250
额定电流	Rated Current [A]	10	10	10
额定冲击电压	Impulse withstand voltage [KV]	2.5	2.5	2.5
导线截面积 Conductor cross section	硬质导线 Solid[mm²]	/		
	柔性导线 Flexible[mm²]	/		

材料 Material		
绝缘材料	Insulation Material	PA66
阻燃等级	Inflammability Class	UL94V-0
导体材料	Conductor Material	Copper alloy
导体表面镀层	Conductor Plating	Sn plated

一般参数 Other Data		
间距/极数	Pitch/Poles [mm]/[P]	3.5/2*2~2*24
剥线长度	Stripping Length [mm]	/
螺丝/扭矩	Screw/Torque(Max)[N.m]	/
工作温度	Operating temperature[℃]	-40~+105
焊锡温度	Soldering temperature	260℃/5S
引针尺寸	Pin dimensions [mm]	0.8*0.8
PCB板孔径	PCB Hole Diameter [mm]	∅1.4

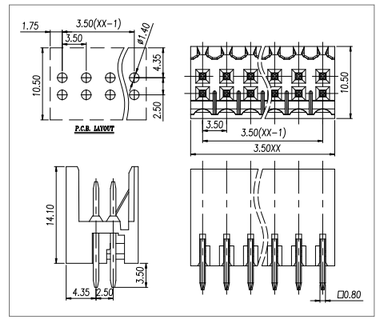

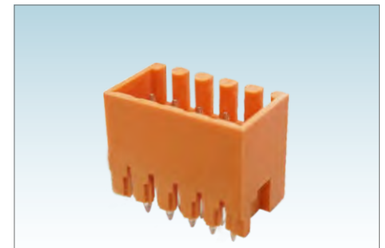

Pitch:3.5 mm

WJ15EDGVHSC-3.5

UL/CUL 技术参数 UL/CUL Technical Data				
等级	Use Group	B	C	D
额定电压	Rated Voltage [V]	150	-	-
额定电流	Rated Current [A]	7	-	-
接线范围 Wire Range	单芯线 Solid [AWG]	/		
	多芯线 Stranded [AWG]	/		
耐电压	Dielectric Voltage-Withstand	1.3KV		

IEC 技术参数 IEC Technical Data				
过电压类别	Surge voltage category	Ⅲ	Ⅲ	Ⅱ
污染等级	Contamination Class	3	2	2
额定电压	Rated Voltage [V]	80	125	250
额定电流	Rated Current [A]	10	10	10
额定冲击电压	Impulse withstand voltage [KV]	2.5	2.5	2.5
导线截面积 Conductor cross section	硬质导线 Solid[mm²]	/		
	柔性导线 Flexible[mm²]	/		

材料 Material		
绝缘材料	Insulation Material	PA66
阻燃等级	Inflammability Class	UL94V-0
导体材料	Conductor Material	Copper alloy
导体表面镀层	Conductor Plating	Sn plated

一般参数 Other Data		
间距/极数	Pitch/Poles [mm]/[P]	3.5/2*2~2*24
剥线长度	Stripping Length [mm]	/
螺丝/扭矩	Screw/Torque(Max)[N.m]	/
工作温度	Operating temperature[℃]	-40~+105
焊锡温度	Soldering temperature	260℃/5S
引针尺寸	Pin dimensions [mm]	0.8*0.8
PCB板孔径	PCB Hole Diameter [mm]	∅1.4

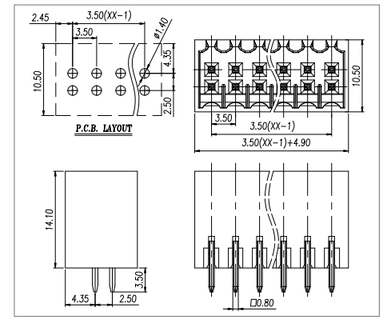

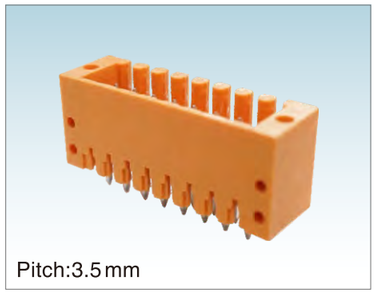

Pitch:3.5 mm

WJ15EDGVHSM-3.5

UL/CUL 技术参数 UL/CUL Technical Data				
等级	Use Group	B	C	D
额定电压	Rated Voltage [V]	150	-	-
额定电流	Rated Current [A]	7	-	-
接线范围 Wire Range	单芯线 Solid [AWG]	/		
	多芯线 Stranded [AWG]	/		
耐电压	Dielectric Voltage-Withstand	1.3KV		
IEC 技术参数 IEC Technical Data				
过电压类别	Surge voltage category	Ⅲ	Ⅲ	Ⅱ
污染等级	Contamination Class	3	2	2
额定电压	Rated Voltage [V]	80	125	250
额定电流	Rated Current [A]	10	10	10
额定冲击电压	Impulse withstand voltage [KV]	2.5	2.5	2.5
导线截面积 Conductor cross section	硬质导线 Solid[mm²]	/		
	柔性导线 Flexible[mm²]	/		
材料 Material				
绝缘材料	Insulation Material	PA66		
阻燃等级	Inflammability Class	UL94V-0		
导体材料	Conductor Material	Copper alloy		
导体表面镀层	Conductor Plating	Sn plated		
一般参数 Other Data				
间距/极数	Pitch/Poles [mm]/[P]	3.5/2*2~2*24		
剥线长度	Stripping Length [mm]	/		
螺丝/扭矩	Screw/Torque(Max)[N.m]	/		
工作温度	Operating temperature[℃]	-40~+105		
焊锡温度	Soldering temperature	260℃/5S		
引针尺寸	Pin dimensions [mm]	0.8*0.8		
PCB板孔径	PCB Hole Diameter [mm]	∅1.4		

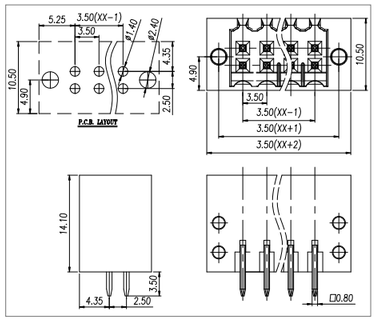

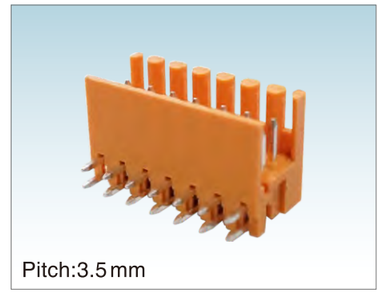

Pitch:3.5 mm

WJ15EDGRHS-3.5

UL/CUL 技术参数 UL/CUL Technical Data				
等级	Use Group	B	C	D
额定电压	Rated Voltage [V]	150	-	-
额定电流	Rated Current [A]	7	-	-
接线范围 Wire Range	单芯线 Solid [AWG]	/		
	多芯线 Stranded [AWG]	/		
耐电压	Dielectric Voltage-Withstand	1.3KV		
IEC 技术参数 IEC Technical Data				
过电压类别	Surge voltage category	Ⅲ	Ⅲ	Ⅱ
污染等级	Contamination Class	3	2	2
额定电压	Rated Voltage [V]	80	125	250
额定电流	Rated Current [A]	10	10	10
额定冲击电压	Impulse withstand voltage [KV]	2.5	2.5	2.5
导线截面积 Conductor cross section	硬质导线 Solid[mm²]	/		
	柔性导线 Flexible[mm²]	/		
材料 Material				
绝缘材料	Insulation Material	PA66		
阻燃等级	Inflammability Class	UL94V-0		
导体材料	Conductor Material	Copper alloy		
导体表面镀层	Conductor Plating	Sn plated		
一般参数 Other Data				
间距/极数	Pitch/Poles [mm]/[P]	3.5/2*2~2*24		
剥线长度	Stripping Length [mm]	/		
螺丝/扭矩	Screw/Torque(Max)[N.m]	/		
工作温度	Operating temperature[℃]	-40~+105		
焊锡温度	Soldering temperature	260℃/5S		
引针尺寸	Pin dimensions [mm]	0.8*0.8		
PCB板孔径	PCB Hole Diameter [mm]	∅1.4		

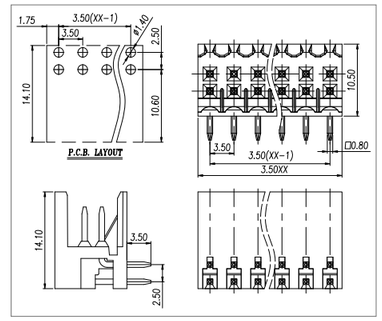

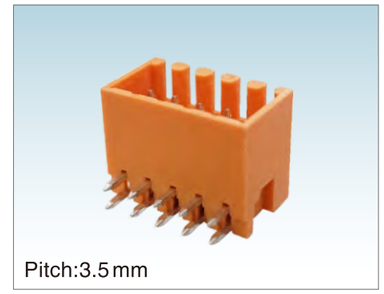

Pitch:3.5 mm

WJ15EDGRHSC-3.5

UL/CUL 技术参数 UL/CUL Technical Data				
等级	Use Group	B	C	D
额定电压	Rated Voltage [V]	150	-	-
额定电流	Rated Current [A]	7	-	-
接线范围 Wire Range	单芯线 Solid [AWG]	/		
	多芯线 Stranded [AWG]	/		
耐电压	Dielectric Voltage-Withstand	1.3KV		
IEC 技术参数 IEC Technical Data				
过电压类别	Surge voltage category	Ⅲ	Ⅲ	Ⅱ
污染等级	Contamination Class	3	2	2
额定电压	Rated Voltage [V]	80	125	250
额定电流	Rated Current [A]	10	10	10
额定冲击电压	Impulse withstand voltage [KV]	2.5	2.5	2.5
导线截面积 Conductor cross section	硬质导线 Solid[mm²]	/		
	柔性导线 Flexible[mm²]	/		
材料 Material				
绝缘材料	Insulation Material	PA66		
阻燃等级	Inflammability Class	UL94V-0		
导体材料	Conductor Material	Copper alloy		
导体表面镀层	Conductor Plating	Sn plated		
一般参数 Other Data				
间距/极数	Pitch/Poles [mm]/[P]	3.5/2*2~2*24		
剥线长度	Stripping Length [mm]	/		
螺丝/扭矩	Screw/Torque(Max)[N.m]	/		
工作温度	Operating temperature[℃]	-40~+105		
焊锡温度	Soldering temperature	260℃/5S		
引针尺寸	Pin dimensions [mm]	0.8*0.8		
PCB板孔径	PCB Hole Diameter [mm]	∅1.4		

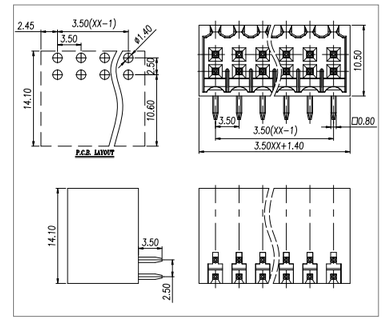

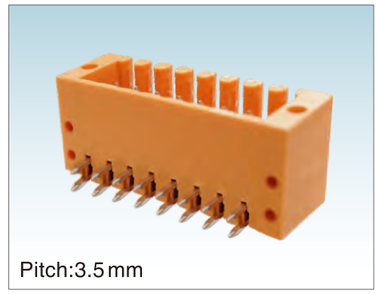

Pitch:3.5 mm

WJ15EDGRHSM-3.5

UL/CUL 技术参数 UL/CUL Technical Data				
等级	Use Group	B	C	D
额定电压	Rated Voltage [V]	150	-	-
额定电流	Rated Current [A]	7	-	-
接线范围 Wire Range	单芯线 Solid [AWG]	/		
	多芯线 Stranded [AWG]	/		
耐电压	Dielectric Voltage-Withstand	1.3KV		
IEC 技术参数 IEC Technical Data				
过电压类别	Surge voltage category	Ⅲ	Ⅲ	Ⅱ
污染等级	Contamination Class	3	2	2
额定电压	Rated Voltage [V]	80	125	250
额定电流	Rated Current [A]	10	10	10
额定冲击电压	Impulse withstand voltage [KV]	2.5	2.5	2.5
导线截面积 Conductor cross section	硬质导线 Solid[mm²]	/		
	柔性导线 Flexible[mm²]	/		
材料 Material				
绝缘材料	Insulation Material	PA66		
阻燃等级	Inflammability Class	UL94V-0		
导体材料	Conductor Material	Copper alloy		
导体表面镀层	Conductor Plating	Sn plated		
一般参数 Other Data				
间距/极数	Pitch/Poles [mm]/[P]	3.5/2*2~2*24		
剥线长度	Stripping Length [mm]	/		
螺丝/扭矩	Screw/Torque(Max)[N.m]	/		
工作温度	Operating temperature[℃]	-40~+105		
焊锡温度	Soldering temperature	260℃/5S		
引针尺寸	Pin dimensions [mm]	0.8*0.8		
PCB板孔径	PCB Hole Diameter [mm]	∅1.4		

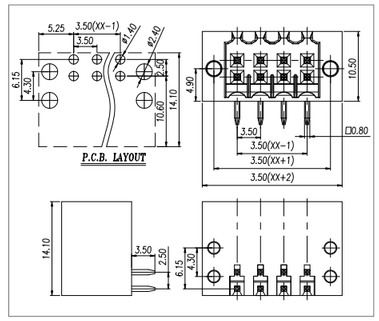



Pitch:2.54mm

WJ15EDGK-2.54

UL/CUL 技术参数 UL/CUL Technical Data				
等级	Use Group	B	C	D
额定电压	Rated Voltage [V]	150	-	-
额定电流	Rated Current [A]	5	-	-
接线范围 Wire Range	单芯线 Solid [AWG]	26~20		
	多芯线 Stranded [AWG]	26~20		
耐电压	Dielectric Voltage-Withstand	1.3KV		
IEC 技术参数 IEC Technical Data				
过电压类别	Overvoltage Category	Ⅲ	Ⅲ	Ⅱ
污染等级	Contamination Class	3	2	2
额定电压	Rated Voltage [V]	100	160	320
额定电流	Rated Current [A]	5	5	5
额定冲击电压	Impulse withstand voltage [KV]	1.5	2.5	2.5
导线截面积 Conductor cross section	硬质导线 Solid[mm²]	0.2~0.5		
	柔性导线 Flexible[mm²]	0.2~0.5		
材料 Material				
绝缘材料	Insulation Material	PA66		
阻燃等级	Flame retardant rating	UL94V-0		
导体材料	Conductor Material	Copper alloy		
导体表面镀层	Plating of conductor surface	Sn plated		
一般参数 Other Data				
间距/极数	Pitch/Poles [mm]/[P]	2.54/2~24		
剥线长度	Stripping Length [mm]	5~6		
螺丝/扭矩	Screw/Torque(Max)[N.m]	M1.6/0.1		
工作温度	Operating temperature[℃]	-40~+105		
焊锡温度	Soldering temperature	/		
引针尺寸	Pin dimensions [mm]	/		
PCB板孔径	PCB Hole Diameter [mm]	/		

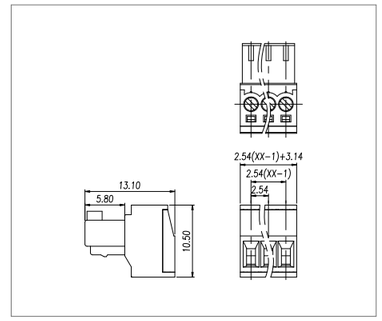

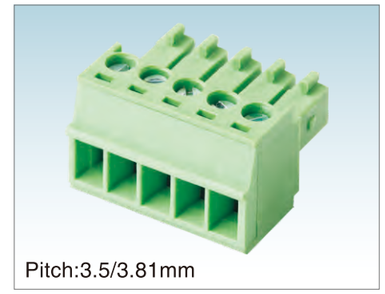

Pitch:3.5/3.81mm

WJ15EDGK-3.5/3.81

UL/CUL 技术参数 UL/CUL Technical Data				
等级	Use Group	B	C	D
额定电压	Rated Voltage [V]	300	-	300
额定电流	Rated Current [A]	8	-	8
接线范围 Wire Range	单芯线 Solid [AWG]	28~16		
	多芯线 Stranded [AWG]	28~16		
耐电压	Dielectric Voltage-Withstand	1.6KV		
IEC 技术参数 IEC Technical Data				
过电压类别	Overvoltage Category	Ⅲ	Ⅲ	Ⅱ
污染等级	Contamination Class	3	2	2
额定电压	Rated Voltage [V]	160	160	250
额定电流	Rated Current [A]	7	7	7
额定冲击电压	Impulse withstand voltage [KV]	2.5	2.5	2.5
导线截面积 Conductor cross section	硬质导线 Solid[mm²]	0.5~1.5		
	柔性导线 Flexible[mm²]	0.5~1.5		
材料 Material				
绝缘材料	Insulation Material	PA66		
阻燃等级	Flame retardant rating	UL94V-0		
导体材料	Conductor Material	Copper alloy		
导体表面镀层	Plating of conductor surface	Ni plated		
一般参数 Other Data				
间距/极数	Pitch/Poles [mm]/[P]	3.5,3.81/2~24		
剥线长度	Stripping Length [mm]	6-7		
螺丝/扭矩	Screw/Torque(Max)[N.m]	M2/0.2		
工作温度	Operating temperature[℃]	-40~+105		
焊锡温度	Soldering temperature	/		
引针尺寸	Pin dimensions [mm]	/		
PCB板孔径	PCB Hole Diameter [mm]	/		

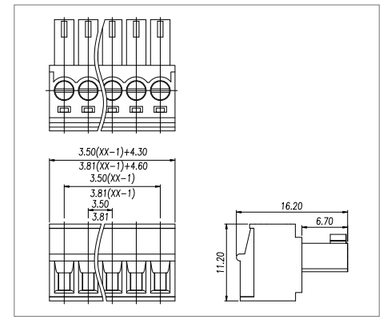

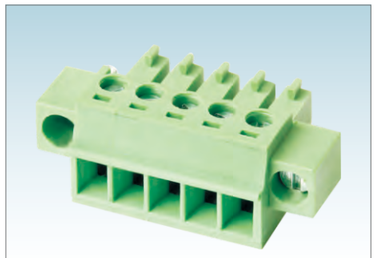

Pitch:3.5/3.81mm

WJ15EDGKM-3.5/3.81

UL/CUL 技术参数 UL/CUL Technical Data				
等级	Use Group	B	C	D
额定电压	Rated Voltage [V]	300	-	300
额定电流	Rated Current [A]	8	-	8
接线范围 Wire Range	单芯线 Solid [AWG]	28~16		
	多芯线 Stranded [AWG]	28~16		
耐电压	Dielectric Voltage-Withstand	1.6KV		

IEC 技术参数 IEC Technical Data				
过电压类别	Overvoltage Category	Ⅲ	Ⅲ	Ⅱ
污染等级	Contamination Class	3	2	2
额定电压	Rated Voltage [V]	160	160	250
额定电流	Rated Current [A]	7	7	7
额定冲击电压	Impulse withstand voltage [KV]	2.5	2.5	2.5
导线截面积 Conductor cross section	硬质导线 Solid[mm²]	0.5~1.5		
	柔性导线 Flexible[mm²]	0.5~1.5		

材料 Material		
绝缘材料	Insulation Material	PA66
阻燃等级	Flame retardant rating	UL94V-0
导体材料	Conductor Material	Copper alloy
导体表面镀层	Plating of conductor surface	Ni plated

一般参数 Other Data		
间距/极数	Pitch/Poles [mm]/[P]	3.5,3.81/2~24
剥线长度	Stripping Length [mm]	6~7
螺丝/扭矩	Screw/Torque(Max)[N.m]	M2/0.2
工作温度	Operating temperature[℃]	-40~+105
焊锡温度	Soldering temperature	/
引针尺寸	Pin dimensions [mm]	/
PCB板孔径	PCB Hole Diameter [mm]	/

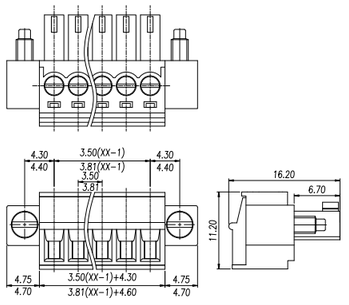



Pitch:3.5/3.81mm

WJ15EDGKA-3.5/3.81

UL/CUL 技术参数 UL/CUL Technical Data				
等级	Use Group	B	C	D
额定电压	Rated Voltage [V]	300	-	300
额定电流	Rated Current [A]	8	-	8
接线范围 Wire Range	单芯线 Solid [AWG]	28~16		
	多芯线 Stranded [AWG]	28~16		
耐电压	Dielectric Voltage-Withstand	1.6KV		

IEC 技术参数 IEC Technical Data				
过电压类别	Overvoltage Category	Ⅲ	Ⅲ	Ⅱ
污染等级	Contamination Class	3	2	2
额定电压	Rated Voltage [V]	160	160	320
额定电流	Rated Current [A]	8	8	8
额定冲击电压	Impulse withstand voltage [KV]	2.5	2.5	2.5
导线截面积 Conductor cross section	硬质导线 Solid[mm²]	0.2~1.5		
	柔性导线 Flexible[mm²]	0.2~1.5		

材料 Material		
绝缘材料	Insulation Material	PA66
阻燃等级	Flame retardant rating	UL94V-0
导体材料	Conductor Material	Copper alloy
导体表面镀层	Plating of conductor surface	Sn plated

一般参数 Other Data		
间距/极数	Pitch/Poles [mm]/[P]	3.5,3.81/2~24
剥线长度	Stripping Length [mm]	6~7
螺丝/扭矩	Screw/Torque(Max)[N.m]	M2/0.2
工作温度	Operating temperature[℃]	-40~+105
焊锡温度	Soldering temperature	/
引针尺寸	Pin dimensions [mm]	/
PCB板孔径	PCB Hole Diameter [mm]	/

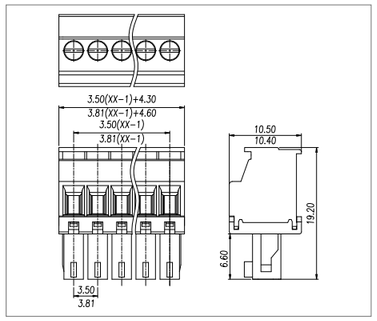

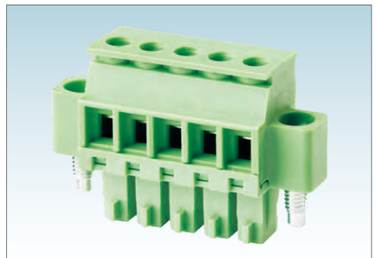

Pitch:3.5/3.81mm

WJ15EDGKAM-3.5/3.81

UL/CUL 技术参数 UL/CUL Technical Data				
等级	Use Group	B	C	D
额定电压	Rated Voltage [V]	300	-	300
额定电流	Rated Current [A]	8	-	8
接线范围 Wire Range	单芯线 Solid [AWG]	28~16		
	多芯线 Stranded [AWG]	28~16		
耐电压	Dielectric Voltage-Withstand	1.6KV		

IEC 技术参数 IEC Technical Data				
过电压类别	Overvoltage Category	Ⅲ	Ⅲ	Ⅱ
污染等级	Contamination Class	3	2	2
额定电压	Rated Voltage [V]	160	160	320
额定电流	Rated Current [A]	8	8	8
额定冲击电压	Impulse withstand voltage [KV]	2.5	2.5	2.5
导线截面积 Conductor cross section	硬质导线 Solid[mm²]	0.2~1.5		
	柔性导线 Flexible[mm²]	0.2~1.5		

材料 Material		
绝缘材料	Insulation Material	PA66
阻燃等级	Flame retardant rating	UL94V-0
导体材料	Conductor Material	Copper alloy
导体表面镀层	Plating of conductor surface	Sn plated

一般参数 Other Data		
间距/极数	Pitch/Poles [mm]/[P]	3.5,3.81/2~24
剥线长度	Stripping Length [mm]	6~7
螺丝/扭矩	Screw/Torque(Max)[N.m]	M2/0.2
工作温度	Operating temperature[℃]	-40~+105
焊锡温度	Soldering temperature	/
引针尺寸	Pin dimensions [mm]	/
PCB板孔径	PCB Hole Diameter [mm]	/

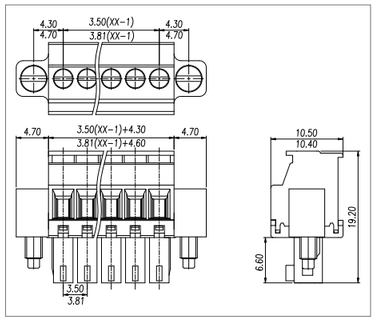



Pitch:3.5/3.81mm

WJ15EDGKB-3.5/3.81

UL/CUL 技术参数 UL/CUL Technical Data				
等级	Use Group	B	C	D
额定电压	Rated Voltage [V]	300	-	300
额定电流	Rated Current [A]	8	-	8
接线范围 Wire Range	单芯线 Solid [AWG]	28~16		
	多芯线 Stranded [AWG]	28~16		
耐电压	Dielectric Voltage-Withstand	1.6KV		

IEC 技术参数 IEC Technical Data				
过电压类别	Overvoltage Category	Ⅲ	Ⅲ	Ⅱ
污染等级	Contamination Class	3	2	2
额定电压	Rated Voltage [V]	160	160	320
额定电流	Rated Current [A]	8	8	8
额定冲击电压	Impulse withstand voltage [KV]	2.5	2.5	2.5
导线截面积 Conductor cross section	硬质导线 Solid[mm²]	0.2~1.5		
	柔性导线 Flexible[mm²]	0.2~1.5		

材料 Material		
绝缘材料	Insulation Material	PA66
阻燃等级	Flame retardant rating	UL94V-0
导体材料	Conductor Material	Copper alloy
导体表面镀层	Plating of conductor surface	Sn plated

一般参数 Other Data		
间距/极数	Pitch/Poles [mm]/[P]	3.5,3.81/2~24
剥线长度	Stripping Length [mm]	6~7
螺丝/扭矩	Screw/Torque(Max)[N.m]	M2/0.2
工作温度	Operating temperature[℃]	-40~+105
焊锡温度	Soldering temperature	/
引针尺寸	Pin dimensions [mm]	/
PCB板孔径	PCB Hole Diameter [mm]	/

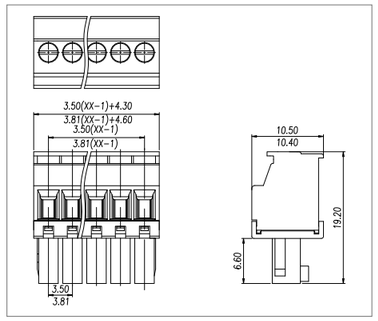



Pitch:3.5/3.81mm

WJ15EDGKBM-3.5/3.81

UL/CUL 技术参数 UL/CUL Technical Data				
等级	Use Group	B	C	D
额定电压	Rated Voltage [V]	300	-	300
额定电流	Rated Current [A]	8	-	8
接线范围 Wire Range	单芯线 Solid [AWG]	28~16		
	多芯线 Stranded [AWG]	28~16		
耐电压	Dielectric Voltage-Withstand	1.6KV		

IEC 技术参数 IEC Technical Data				
过电压类别	Overvoltage Category	Ⅲ	Ⅲ	Ⅱ
污染等级	Contamination Class	3	2	2
额定电压	Rated Voltage [V]	160	160	320
额定电流	Rated Current [A]	8	8	8
额定冲击电压	Impulse withstand voltage [KV]	2.5	2.5	2.5
导线截面积 Conductor cross section	硬质导线 Solid[mm²]	0.2~1.5		
	柔性导线 Flexible[mm²]	0.2~1.5		

材料 Material		
绝缘材料	Insulation Material	PA66
阻燃等级	Flame retardant rating	UL94V-0
导体材料	Conductor Material	Copper alloy
导体表面镀层	Plating of conductor surface	Sn plated

一般参数 Other Data		
间距/极数	Pitch/Poles [mm]/[P]	3.5,3.81/2~24
剥线长度	Stripping Length [mm]	6~7
螺丝/扭矩	Screw/Torque(Max)[N.m]	M2/0.2
工作温度	Operating temperature[℃]	-40~+105
焊锡温度	Soldering temperature	/
引针尺寸	Pin dimensions [mm]	/
PCB板孔径	PCB Hole Diameter [mm]	/

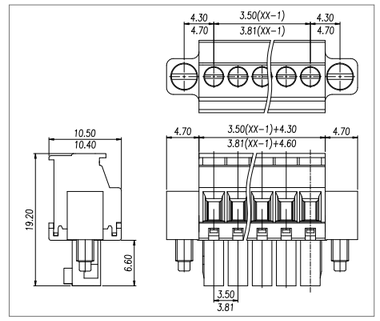



Pitch:3.81mm

WJ15EDGKC-3.81

UL/CUL 技术参数 UL/CUL Technical Data				
等级	Use Group	B	C	D
额定电压	Rated Voltage [V]	300	-	300
额定电流	Rated Current [A]	8	-	8
接线范围 Wire Range	单芯线 Solid [AWG]	28~16		
	多芯线 Stranded [AWG]	28~16		
耐电压	Dielectric Voltage-Withstand	1.6KV		

IEC 技术参数 IEC Technical Data				
过电压类别	Overvoltage Category	Ⅲ	Ⅲ	Ⅱ
污染等级	Contamination Class	3	2	2
额定电压	Rated Voltage [V]	160	160	320
额定电流	Rated Current [A]	8	8	8
额定冲击电压	Impulse withstand voltage [KV]	2.5	2.5	2.5
导线截面积 Conductor cross section	硬质导线 Solid[mm²]	0.2~1.5		
	柔性导线 Flexible[mm²]	0.2~1.5		

材料 Material		
绝缘材料	Insulation Material	PA66
阻燃等级	Flame retardant rating	UL94V-0
导体材料	Conductor Material	Copper alloy
导体表面镀层	Plating of conductor surface	Sn plated

一般参数 Other Data		
间距/极数	Pitch/Poles [mm]/[P]	3.81/2~24
剥线长度	Stripping Length [mm]	6~7
螺丝/扭矩	Screw/Torque(Max)[N.m]	M2/0.2
工作温度	Operating temperature[℃]	-40~+105
焊锡温度	Soldering temperature	/
引针尺寸	Pin dimensions [mm]	/
PCB板孔径	PCB Hole Diameter [mm]	/

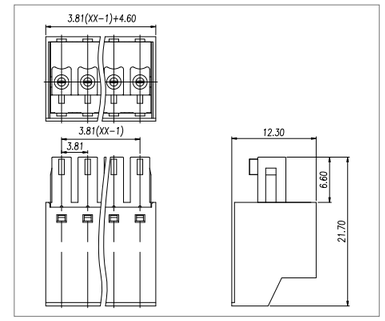

cULus CE VDE CQC RoHS Ex

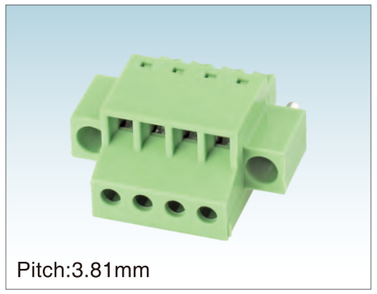

Pitch:3.81mm

WJ15EDGKCM-3.81

UL/CUL 技术参数 UL/CUL Technical Data				
等级	Use Group	B	C	D
额定电压	Rated Voltage [V]	300	-	300
额定电流	Rated Current [A]	8	-	8
接线范围 Wire Range	单芯线 Solid [AWG]	28~16		
	多芯线 Stranded [AWG]	28~16		
耐电压	Dielectric Voltage-Withstand	1.6KV		

IEC 技术参数 IEC Technical Data				
过电压类别	Overvoltage Category	Ⅲ	Ⅲ	Ⅱ
污染等级	Contamination Class	3	2	2
额定电压	Rated Voltage [V]	160	160	320
额定电流	Rated Current [A]	8	8	8
额定冲击电压	Impulse withstand voltage [KV]	2.5	2.5	2.5
导线截面积 Conductor cross section	硬质导线 Solid[mm²]	0.2~1.5		
	柔性导线 Flexible[mm²]	0.2~1.5		

材料 Material		
绝缘材料	Insulation Material	PA66
阻燃等级	Flame retardant rating	UL94V-0
导体材料	Conductor Material	Copper alloy
导体表面镀层	Plating of conductor surface	Sn plated

一般参数 Other Data		
间距/极数	Pitch/Poles [mm]/[P]	3.81/2~24
剥线长度	Stripping Length [mm]	6~7
螺丝/扭矩	Screw/Torque(Max)[N.m]	M2/0.2
工作温度	Operating temperature[℃]	-40~+105
焊锡温度	Soldering temperature	/
引针尺寸	Pin dimensions [mm]	/
PCB板孔径	PCB Hole Diameter [mm]	/

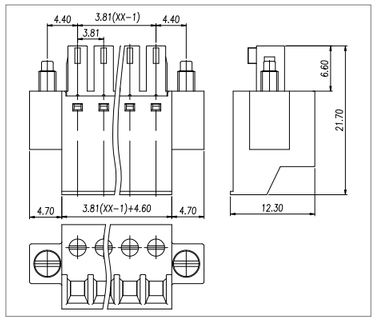

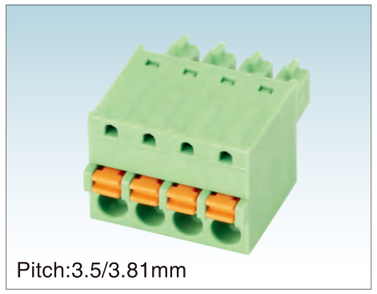

Pitch:3.5/3.81mm

WJ15EDGKD-3.5/3.81

UL/CUL 技术参数 UL/CUL Technical Data				
等级	Use Group	B	C	D
额定电压	Rated Voltage [V]	300	-	300
额定电流	Rated Current [A]	8	-	8
接线范围 Wire Range	单芯线 Solid [AWG]	28~16		
	多芯线 Stranded [AWG]	28~16		
耐电压	Dielectric Voltage-Withstand	1.6KV		

IEC 技术参数 IEC Technical Data				
过电压类别	Overvoltage Category	Ⅲ	Ⅲ	Ⅱ
污染等级	Contamination Class	3	2	2
额定电压	Rated Voltage [V]	160	160	320
额定电流	Rated Current [A]	8	8	8
额定冲击电压	Impulse withstand voltage [KV]	2.5	2.5	2.5
导线截面积 Conductor cross section	硬质导线 Solid[mm²]	0.2~1.5		
	柔性导线 Flexible[mm²]	0.2~1.5		

材料 Material		
绝缘材料	Insulation Material	PA66
阻燃等级	Flame retardant rating	UL94V-0
导体材料	Conductor Material	Copper alloy
导体表面镀层	Plating of conductor surface	Sn plated

一般参数 Other Data		
间距/极数	Pitch/Poles [mm]/[P]	3.5,3.81/2~24
剥线长度	Stripping Length [mm]	7~8
螺丝/扭矩	Screw/Torque(Max)[N.m]	/
工作温度	Operating temperature[℃]	-40~+105
焊锡温度	Soldering temperature	/
引针尺寸	Pin dimensions [mm]	/
PCB板孔径	PCB Hole Diameter [mm]	/

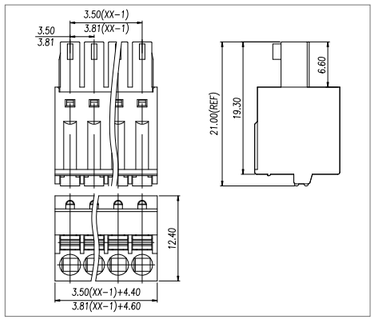



Pitch:3.5/3.81mm

WJ15EDGKDM-3.5/3.81

UL/CUL 技术参数 UL/CUL Technical Data				
等级	Use Group	B	C	D
额定电压	Rated Voltage [V]	300	-	300
额定电流	Rated Current [A]	8	-	8
接线范围 Wire Range	单芯线 Solid [AWG]	28~16		
	多芯线 Stranded [AWG]	28~16		
耐电压	Dielectric Voltage-Withstand	1.6KV		

IEC 技术参数 IEC Technical Data				
过电压类别	Overvoltage Category	Ⅲ	Ⅲ	Ⅱ
污染等级	Contamination Class	3	2	2
额定电压	Rated Voltage [V]	160	160	320
额定电流	Rated Current [A]	8	8	8
额定冲击电压	Impulse withstand voltage [KV]	2.5	2.5	2.5
导线截面积 Conductor cross section	硬质导线 Solid[mm²]	0.2~1.5		
	柔性导线 Flexible[mm²]	0.2~1.5		

材料 Material		
绝缘材料	Insulation Material	PA66
阻燃等级	Flame retardant rating	UL94V-0
导体材料	Conductor Material	Copper alloy
导体表面镀层	Plating of conductor surface	Sn plated

一般参数 Other Data		
间距/极数	Pitch/Poles [mm]/[P]	3.5,3.81/2~24
剥线长度	Stripping Length [mm]	7-8
螺丝/扭矩	Screw/Torque(Max)[N.m]	/
工作温度	Operating temperature[℃]	-40~+105
焊锡温度	Soldering temperature	/
引针尺寸	Pin dimensions [mm]	/
PCB板孔径	PCB Hole Diameter [mm]	/

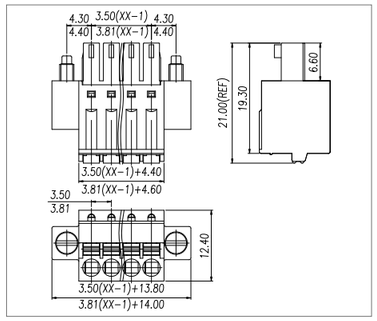



Pitch:3.5/3.81mm

WJ15EDGKDH-3.5/3.81

UL/CUL 技术参数 UL/CUL Technical Data				
等级	Use Group	B	C	D
额定电压	Rated Voltage [V]	300	-	300
额定电流	Rated Current [A]	8	-	8
接线范围 Wire Range	单芯线 Solid [AWG]	28~16		
	多芯线 Stranded [AWG]	28~16		
耐电压	Dielectric Voltage-Withstand	1.6KV		

IEC 技术参数 IEC Technical Data				
过电压类别	Overvoltage Category	Ⅲ	Ⅲ	Ⅱ
污染等级	Contamination Class	3	2	2
额定电压	Rated Voltage [V]	160	160	320
额定电流	Rated Current [A]	8	8	8
额定冲击电压	Impulse withstand voltage [KV]	2.5	2.5	2.5
导线截面积 Conductor cross section	硬质导线 Solid[mm²]	0.2~1.5		
	柔性导线 Flexible[mm²]	0.2~1.5		

材料 Material		
绝缘材料	Insulation Material	PA66
阻燃等级	Flame retardant rating	UL94V-0
导体材料	Conductor Material	Copper alloy
导体表面镀层	Plating of conductor surface	Sn plated

一般参数 Other Data		
间距/极数	Pitch/Poles [mm]/[P]	3.5,3.81/2~24
剥线长度	Stripping Length [mm]	10-11
螺丝/扭矩	Screw/Torque(Max)[N.m]	/
工作温度	Operating temperature[℃]	-40~+105
焊锡温度	Soldering temperature	/
引针尺寸	Pin dimensions [mm]	/
PCB板孔径	PCB Hole Diameter [mm]	/

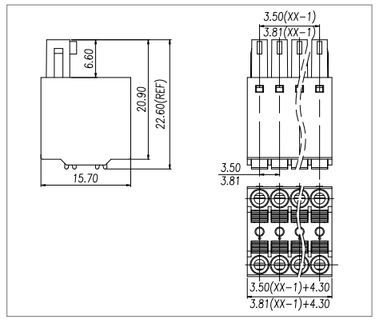



Pitch:3.5/3.81mm

WJ15EDGKDHM-3.5/3.81

UL/CUL 技术参数 UL/CUL Technical Data				
等级	Use Group	B	C	D
额定电压	Rated Voltage [V]	300	-	300
额定电流	Rated Current [A]	8	-	8
接线范围 Wire Range	单芯线 Solid [AWG]	28~16		
	多芯线 Stranded [AWG]	28~16		
耐电压	Dielectric Voltage-Withstand	1.6KV		

IEC 技术参数 IEC Technical Data				
过电压类别	Overvoltage Category	Ⅲ	Ⅲ	Ⅱ
污染等级	Contamination Class	3	2	2
额定电压	Rated Voltage [V]	160	160	320
额定电流	Rated Current [A]	8	8	8
额定冲击电压	Impulse withstand voltage [KV]	2.5	2.5	2.5
导线截面积 Conductor cross section	硬质导线 Solid[mm²]	0.2~1.5		
	柔性导线 Flexible[mm²]	0.2~1.5		

材料 Material		
绝缘材料	Insulation Material	PA66
阻燃等级	Flame retardant rating	UL94V-0
导体材料	Conductor Material	Copper alloy
导体表面镀层	Plating of conductor surface	Sn plated

一般参数 Other Data		
间距/极数	Pitch/Poles [mm]/[P]	3.5,3.81/2~24
剥线长度	Stripping Length [mm]	10-11
螺丝/扭矩	Screw/Torque(Max)[N.m]	/
工作温度	Operating temperature[℃]	-40~+105
焊锡温度	Soldering temperature	/
引针尺寸	Pin dimensions [mm]	/
PCB板孔径	PCB Hole Diameter [mm]	/

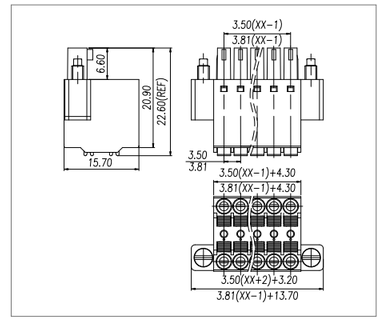

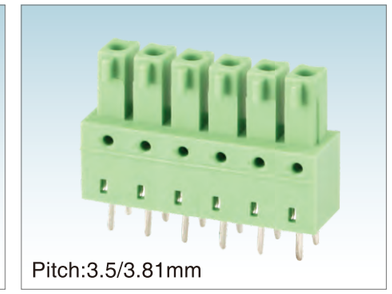

Pitch:3.5/3.81mm

WJ15EDGB-3.5/3.81

UL/CUL 技术参数 UL/CUL Technical Data				
等级	Use Group	B	C	D
额定电压	Rated Voltage [V]	300	-	300
额定电流	Rated Current [A]	8	-	8
接线范围 Wire Range	单芯线 Solid [AWG]	/		
	多芯线 Stranded [AWG]	/		
耐电压	Dielectric Voltage-Withstand	1.6KV		

IEC 技术参数 IEC Technical Data				
过电压类别	Overvoltage Category	Ⅲ	Ⅲ	Ⅱ
污染等级	Contamination Class	3	2	2
额定电压	Rated Voltage [V]	160	160	320
额定电流	Rated Current [A]	8	8	8
额定冲击电压	Impulse withstand voltage [KV]	2.5	2.5	2.5
导线截面积 Conductor cross section	硬质导线 Solid[mm²]	/		
	柔性导线 Flexible[mm²]	/		

材料 Material		
绝缘材料	Insulation Material	PA66
阻燃等级	Flame retardant rating	UL94V-0
导体材料	Conductor Material	Copper alloy
导体表面镀层	Plating of conductor surface	Sn plated

一般参数 Other Data		
间距/极数	Pitch/Poles [mm]/[P]	3.5,3.81/2~24
剥线长度	Stripping Length [mm]	/
螺丝/扭矩	Screw/Torque(Max)[N.m]	/
工作温度	Operating temperature[℃]	-40~+105
焊锡温度	Soldering temperature	260℃ /5S
引针尺寸	Pin dimensions [mm]	0.6*1.0
PCB板孔径	PCB Hole Diameter [mm]	∅1.4

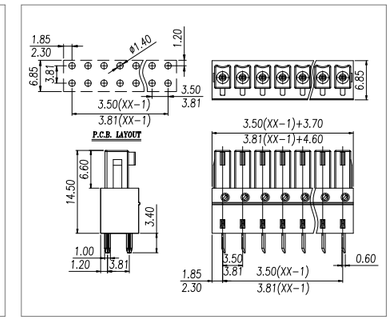

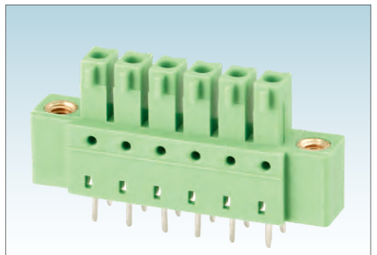

Pitch:3.5/3.81mm

WJ15EDGBM-3.5/3.81

UL/CUL 技术参数 UL/CUL Technical Data				
等级	Use Group	B	C	D
额定电压	Rated Voltage [V]	300	-	300
额定电流	Rated Current [A]	8	-	8
接线范围 Wire Range	单芯线 Solid [AWG]	/		
	多芯线 Stranded [AWG]	/		
耐电压	Dielectric Voltage-Withstand	1.6KV		
IEC 技术参数 IEC Technical Data				
过电压类别	Overvoltage Category	Ⅲ	Ⅲ	Ⅱ
污染等级	Contamination Class	3	2	2
额定电压	Rated Voltage [V]	160	160	320
额定电流	Rated Current [A]	8	8	8
额定冲击电压	Impulse withstand voltage [KV]	2.5	2.5	2.5
导线截面积 Conductor cross section	硬质导线 Solid[mm²]	/		
	柔性导线 Flexible[mm²]	/		
材料 Material				
绝缘材料	Insulation Material	PA66		
阻燃等级	Flame retardant rating	UL94V-0		
导体材料	Conductor Material	Copper alloy		
导体表面镀层	Plating of conductor surface	Sn plated		
一般参数 Other Data				
间距/极数	Pitch/Poles [mm]/[P]	3.5,3.81/2~24		
剥线长度	Stripping Length [mm]	/		
螺丝/扭矩	Screw/Torque(Max)[N.m]	/		
工作温度	Operating temperature[℃]	-40~+105		
焊锡温度	Soldering temperature	260℃ /5S		
引针尺寸	Pin dimensions [mm]	0.6*1.0		
PCB板孔径	PCB Hole Diameter [mm]	∅1.4		

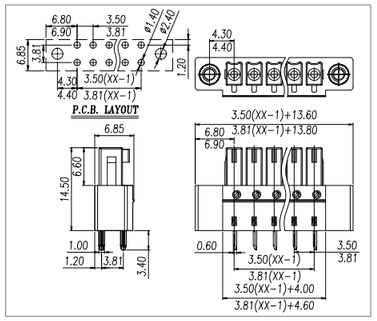

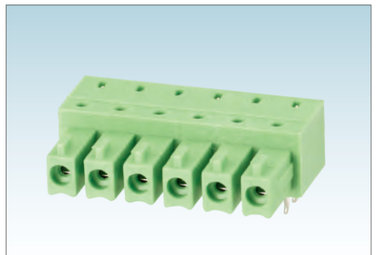

Pitch:3.5/3.81mm

WJ15EDGA-3.5/3.81

UL/CUL 技术参数 UL/CUL Technical Data				
等级	Use Group	B	C	D
额定电压	Rated Voltage [V]	300	-	300
额定电流	Rated Current [A]	8	-	8
接线范围 Wire Range	单芯线 Solid [AWG]	/		
	多芯线 Stranded [AWG]	/		
耐电压	Dielectric Voltage-Withstand	1.6KV		
IEC 技术参数 IEC Technical Data				
过电压类别	Overvoltage Category	Ⅲ	Ⅲ	Ⅱ
污染等级	Contamination Class	3	2	2
额定电压	Rated Voltage [V]	160	160	320
额定电流	Rated Current [A]	8	8	8
额定冲击电压	Impulse withstand voltage [KV]	2.5	2.5	2.5
导线截面积 Conductor cross section	硬质导线 Solid[mm²]	/		
	柔性导线 Flexible[mm²]	/		
材料 Material				
绝缘材料	Insulation Material	PA66		
阻燃等级	Flame retardant rating	UL94V-0		
导体材料	Conductor Material	Copper alloy		
导体表面镀层	Plating of conductor surface	Sn plated		
一般参数 Other Data				
间距/极数	Pitch/Poles [mm]/[P]	3.5,3.81/2~24		
剥线长度	Stripping Length [mm]	/		
螺丝/扭矩	Screw/Torque(Max)[N.m]	/		
工作温度	Operating temperature[℃]	-40~+105		
焊锡温度	Soldering temperature	260℃ /5S		
引针尺寸	Pin dimensions [mm]	0.6*1.0		
PCB板孔径	PCB Hole Diameter [mm]	∅1.4		

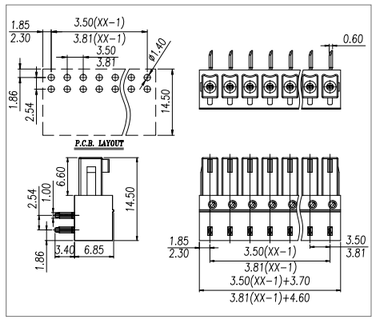

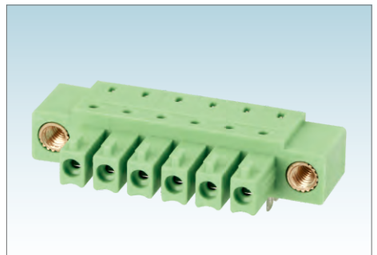

Pitch:3.5/3.81mm

WJ15EDGAM-3.5/3.81

UL/CUL 技术参数 UL/CUL Technical Data				
等级	Use Group	B	C	D
额定电压	Rated Voltage [V]	300	-	300
额定电流	Rated Current [A]	8	-	8
接线范围 Wire Range	单芯线 Solid [AWG]	/		
	多芯线 Stranded [AWG]	/		
耐电压	Dielectric Voltage-Withstand	1.6KV		
IEC 技术参数 IEC Technical Data				
过电压类别	Overvoltage Category	Ⅲ	Ⅲ	Ⅱ
污染等级	Contamination Class	3	2	2
额定电压	Rated Voltage [V]	160	160	320
额定电流	Rated Current [A]	8	8	8
额定冲击电压	Impulse withstand voltage [KV]	2.5	2.5	2.5
导线截面积 Conductor cross section	硬质导线 Solid[mm²]	/		
	柔性导线 Flexible[mm²]	/		
材料 Material				
绝缘材料	Insulation Material	PA66		
阻燃等级	Flame retardant rating	UL94V-0		
导体材料	Conductor Material	Copper alloy		
导体表面镀层	Plating of conductor surface	Sn plated		
一般参数 Other Data				
间距/极数	Pitch/Poles [mm]/[P]	3.5,3.81/2~24		
剥线长度	Stripping Length [mm]	/		
螺丝/扭矩	Screw/Torque(Max)[N.m]	/		
工作温度	Operating temperature[℃]	-40~+105		
焊锡温度	Soldering temperature	260℃ /5S		
引针尺寸	Pin dimensions [mm]	0.6*1.0		
PCB板孔径	PCB Hole Diameter [mm]	∅1.4		

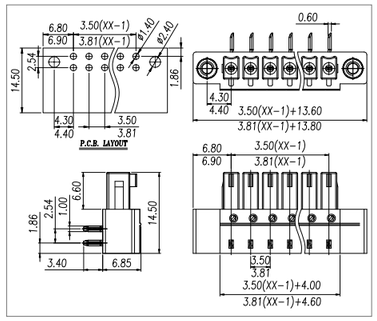

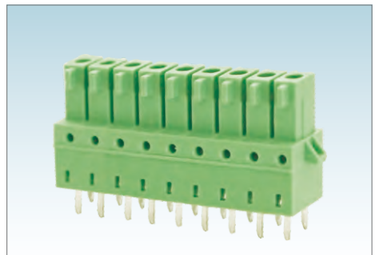

Pitch:3.5mm

WJ15EDGBG-3.5

UL/CUL 技术参数 UL/CUL Technical Data				
等级	Use Group	B	C	D
额定电压	Rated Voltage [V]	300	-	300
额定电流	Rated Current [A]	8	-	8
接线范围 Wire Range	单芯线 Solid [AWG]	/		
	多芯线 Stranded [AWG]	/		
耐电压	Dielectric Voltage-Withstand	1.6KV		
IEC 技术参数 IEC Technical Data				
过电压类别	Overvoltage Category	Ⅲ	Ⅲ	Ⅱ
污染等级	Contamination Class	3	2	2
额定电压	Rated Voltage [V]	160	160	320
额定电流	Rated Current [A]	8	8	8
额定冲击电压	Impulse withstand voltage [KV]	2.5	2.5	2.5
导线截面积 Conductor cross section	硬质导线 Solid[mm²]	/		
	柔性导线 Flexible[mm²]	/		
材料 Material				
绝缘材料	Insulation Material	PA66		
阻燃等级	Flame retardant rating	UL94V-0		
导体材料	Conductor Material	Copper alloy		
导体表面镀层	Plating of conductor surface	Sn plated		
一般参数 Other Data				
间距/极数	Pitch/Poles [mm]/[P]	3.5/2~24		
剥线长度	Stripping Length [mm]	/		
螺丝/扭矩	Screw/Torque(Max)[N.m]	/		
工作温度	Operating temperature[℃]	-40~+105		
焊锡温度	Soldering temperature	260℃ /5S		
引针尺寸	Pin dimensions [mm]	0.6*1.0		
PCB板孔径	PCB Hole Diameter [mm]	∅1.4		

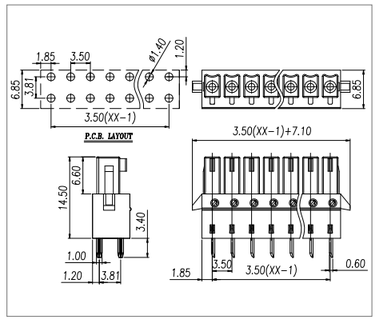

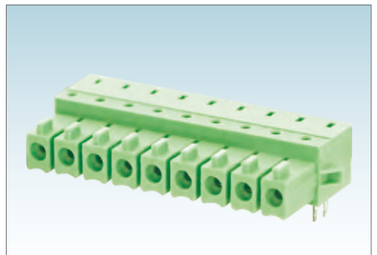

Pitch:3.5mm

WJ15EDGAG-3.5

UL/CUL 技术参数 UL/CUL Technical Data				
等级	Use Group	B	C	D
额定电压	Rated Voltage [V]	300	-	300
额定电流	Rated Current [A]	8	-	8
接线范围 Wire Range	单芯线 Solid [AWG]	/		
	多芯线 Stranded [AWG]	/		
耐电压	Dielectric Voltage-Withstand	1.6KV		
IEC 技术参数 IEC Technical Data				
过电压类别	Overvoltage Category	Ⅲ	Ⅲ	Ⅱ
污染等级	Contamination Class	3	2	2
额定电压	Rated Voltage [V]	160	160	320
额定电流	Rated Current [A]	8	8	8
额定冲击电压	Impulse withstand voltage [KV]	2.5	2.5	2.5
导线截面积 Conductor cross section	硬质导线 Solid[mm²]	/		
	柔性导线 Flexible[mm²]	/		
材料 Material				
绝缘材料	Insulation Material	PA66		
阻燃等级	Flame retardant rating	UL94V-0		
导体材料	Conductor Material	Copper alloy		
导体表面镀层	Plating of conductor surface	Sn plated		
一般参数 Other Data				
间距/极数	Pitch/Poles [mm]/[P]	3.5/2~24		
剥线长度	Stripping Length [mm]	/		
螺丝/扭矩	Screw/Torque(Max)[N.m]	/		
工作温度	Operating temperature[℃]	-40~+105		
焊锡温度	Soldering temperature	260℃ /5S		
引针尺寸	Pin dimensions [mm]	0.6*1.0		
PCB板孔径	PCB Hole Diameter [mm]	∅1.4		

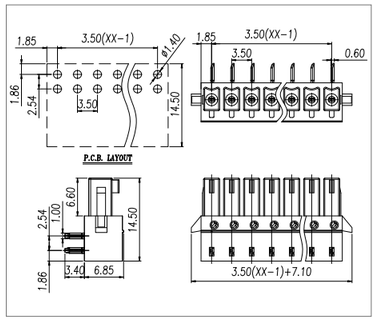

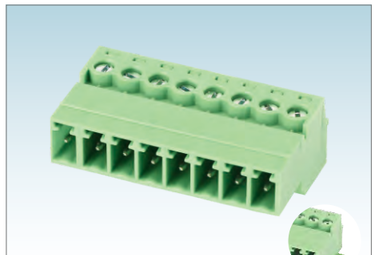

Pitch:3.81mm

WJ15EDGKR-3.81

UL/CUL 技术参数 UL/CUL Technical Data				
等级	Use Group	B	C	D
额定电压	Rated Voltage [V]	300	-	300
额定电流	Rated Current [A]	8	-	8
接线范围 Wire Range	单芯线 Solid [AWG]	28~16		
	多芯线 Stranded [AWG]	28~16		
耐电压	Dielectric Voltage-Withstand	1.6KV		
IEC 技术参数 IEC Technical Data				
过电压类别	Overvoltage Category	Ⅲ	Ⅲ	Ⅱ
污染等级	Contamination Class	3	2	2
额定电压	Rated Voltage [V]	160	160	320
额定电流	Rated Current [A]	8	8	8
额定冲击电压	Impulse withstand voltage [KV]	2.5	2.5	2.5
导线截面积 Conductor cross section	硬质导线 Solid[mm²]	0.2~1.5		
	柔性导线 Flexible[mm²]	0.2~1.5		
材料 Material				
绝缘材料	Insulation Material	PA66		
阻燃等级	Flame retardant rating	UL94V-0		
导体材料	Conductor Material	Copper alloy		
导体表面镀层	Plating of conductor surface	Sn plated		
一般参数 Other Data				
间距/极数	Pitch/Poles [mm]/[P]	3.81/2~24		
剥线长度	Stripping Length [mm]	6~7		
螺丝/扭矩	Screw/Torque(Max)[N.m]	M2/0.2		
工作温度	Operating temperature[℃]	-40~+105		
焊锡温度	Soldering temperature	/		
引针尺寸	Pin dimensions [mm]	/		
PCB板孔径	PCB Hole Diameter [mm]	/		

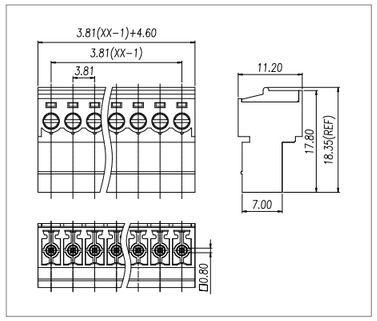



Pitch:3.81mm

WJ15EDGKRM-3.81

UL/CUL 技术参数 UL/CUL Technical Data				
等级	Use Group	B	C	D
额定电压	Rated Voltage [V]	300	-	300
额定电流	Rated Current [A]	8	-	8
接线范围 Wire Range	单芯线 Solid [AWG]	28~16		
	多芯线 Stranded [AWG]	28~16		
耐电压	Dielectric Voltage-Withstand	1.6KV		

IEC 技术参数 IEC Technical Data				
过电压类别	Overvoltage Category	Ⅲ	Ⅲ	Ⅱ
污染等级	Contamination Class	3	2	2
额定电压	Rated Voltage [V]	160	160	320
额定电流	Rated Current [A]	8	8	8
额定冲击电压	Impulse withstand voltage [KV]	2.5	2.5	2.5
导线截面积 Conductor cross section	硬质导线 Solid[mm²]	0.2~1.5		
	柔性导线 Flexible[mm²]	0.2~1.5		

材料 Material		
绝缘材料	Insulation Material	PA66
阻燃等级	Flame retardant rating	UL94V-0
导体材料	Conductor Material	Copper alloy
导体表面镀层	Plating of conductor surface	Sn plated

一般参数 Other Data		
间距/极数	Pitch/Poles [mm]/[P]	3.81/2~24
剥线长度	Stripping Length [mm]	6~7
螺丝/扭矩	Screw/Torque(Max)[N.m]	M2/0.2
工作温度	Operating temperature[℃]	-40~+105
焊锡温度	Soldering temperature	/
引针尺寸	Pin dimensions [mm]	/
PCB板孔径	PCB Hole Diameter [mm]	/

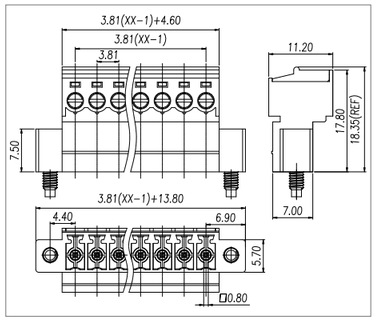

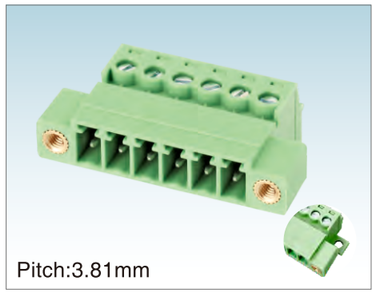

Pitch:3.81mm

WJ15EDGKRN-3.81

UL/CUL 技术参数 UL/CUL Technical Data				
等级	Use Group	B	C	D
额定电压	Rated Voltage [V]	300	-	300
额定电流	Rated Current [A]	8	-	8
接线范围 Wire Range	单芯线 Solid [AWG]	28~16		
	多芯线 Stranded [AWG]	28~16		
耐电压	Dielectric Voltage-Withstand	1.6KV		

IEC 技术参数 IEC Technical Data				
过电压类别	Overvoltage Category	Ⅲ	Ⅲ	Ⅱ
污染等级	Contamination Class	3	2	2
额定电压	Rated Voltage [V]	160	160	320
额定电流	Rated Current [A]	8	8	8
额定冲击电压	Impulse withstand voltage [KV]	2.5	2.5	2.5
导线截面积 Conductor cross section	硬质导线 Solid[mm²]	0.2~1.5		
	柔性导线 Flexible[mm²]	0.2~1.5		

材料 Material		
绝缘材料	Insulation Material	PA66
阻燃等级	Flame retardant rating	UL94V-0
导体材料	Conductor Material	Copper alloy
导体表面镀层	Plating of conductor surface	Sn plated

一般参数 Other Data		
间距/极数	Pitch/Poles [mm]/[P]	3.81/2~24
剥线长度	Stripping Length [mm]	6~7
螺丝/扭矩	Screw/Torque(Max)[N.m]	M2/0.2
工作温度	Operating temperature[℃]	-40~+105
焊锡温度	Soldering temperature	/
引针尺寸	Pin dimensions [mm]	/
PCB板孔径	PCB Hole Diameter [mm]	/

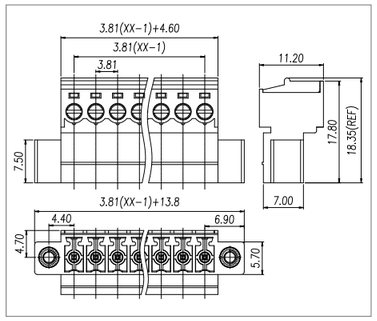



Pitch:3.5mm

WJ15EDGKNR-3.5

UL/CUL 技术参数 UL/CUL Technical Data				
等级	Use Group	B	C	D
额定电压	Rated Voltage [V]	300	-	300
额定电流	Rated Current [A]	8	-	8
接线范围 Wire Range	单芯线 Solid [AWG]	24~16		
	多芯线 Stranded [AWG]	24~16		
耐电压	Dielectric Voltage-Withstand	1.6KV		

IEC 技术参数 IEC Technical Data				
过电压类别	Overvoltage Category	Ⅲ	Ⅲ	Ⅱ
污染等级	Contamination Class	3	2	2
额定电压	Rated Voltage [V]	160	160	320
额定电流	Rated Current [A]	8	8	8
额定冲击电压	Impulse withstand voltage [KV]	2.5	2.5	2.5
导线截面积 Conductor cross section	硬质导线 Solid[mm²]	0.2~1.5		
	柔性导线 Flexible[mm²]	0.2~1.5		

材料 Material		
绝缘材料	Insulation Material	PA66
阻燃等级	Flame retardant rating	UL94V-0
导体材料	Conductor Material	Copper alloy
导体表面镀层	Plating of conductor surface	Sn plated

一般参数 Other Data		
间距/极数	Pitch/Poles [mm]/[P]	3.5/2~24
剥线长度	Stripping Length [mm]	9~10
螺丝/扭矩	Screw/Torque(Max)[N.m]	/
工作温度	Operating temperature[℃]	-40~+105
焊锡温度	Soldering temperature	/
引针尺寸	Pin dimensions [mm]	/
PCB板孔径	PCB Hole Diameter [mm]	/

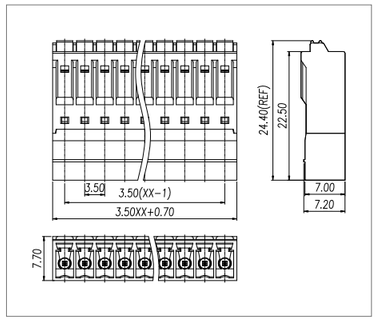



Pitch:3.5mm

WJ15EDGKNRT-3.5

UL/CUL 技术参数 UL/CUL Technical Data				
等级	Use Group	B	C	D
额定电压	Rated Voltage [V]	300	-	300
额定电流	Rated Current [A]	8	-	8
接线范围 Wire Range	单芯线 Solid [AWG]	24~16		
	多芯线 Stranded [AWG]	24~16		
耐电压	Dielectric Voltage-Withstand	1.6KV		

IEC 技术参数 IEC Technical Data				
过电压类别	Overvoltage Category	Ⅲ	Ⅲ	Ⅱ
污染等级	Contamination Class	3	2	2
额定电压	Rated Voltage [V]	160	160	320
额定电流	Rated Current [A]	8	8	8
额定冲击电压	Impulse withstand voltage [KV]	2.5	2.5	2.5
导线截面积 Conductor cross section	硬质导线 Solid[mm²]	0.2~1.5		
	柔性导线 Flexible[mm²]	0.2~1.5		

材料 Material		
绝缘材料	Insulation Material	PA66
阻燃等级	Flame retardant rating	UL94V-0
导体材料	Conductor Material	Copper alloy
导体表面镀层	Plating of conductor surface	Sn plated

一般参数 Other Data		
间距/极数	Pitch/Poles [mm]/[P]	3.5/2~24
剥线长度	Stripping Length [mm]	9~10
螺丝/扭矩	Screw/Torque(Max)[N.m]	/
工作温度	Operating temperature[℃]	-40~+105
焊锡温度	Soldering temperature	/
引针尺寸	Pin dimensions [mm]	/
PCB板孔径	PCB Hole Diameter [mm]	/

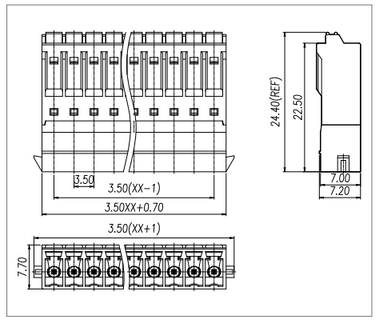



Pitch:3.5mm

WJ15EDGKNRG-3.5

UL/CUL 技术参数 UL/CUL Technical Data				
等级	Use Group	B	C	D
额定电压	Rated Voltage [V]	300	-	300
额定电流	Rated Current [A]	8	-	8
接线范围 Wire Range	单芯线 Solid [AWG]	24~16		
	多芯线 Stranded [AWG]	24~16		
耐电压	Dielectric Voltage-Withstand	1.6KV		

IEC 技术参数 IEC Technical Data				
过电压类别	Overvoltage Category	Ⅲ	Ⅲ	Ⅱ
污染等级	Contamination Class	3	2	2
额定电压	Rated Voltage [V]	160	160	320
额定电流	Rated Current [A]	8	8	8
额定冲击电压	Impulse withstand voltage [KV]	2.5	2.5	2.5
导线截面积 Conductor cross section	硬质导线 Solid[mm²]	0.2~1.5		
	柔性导线 Flexible[mm²]	0.2~1.5		

材料 Material		
绝缘材料	Insulation Material	PA66
阻燃等级	Flame retardant rating	UL94V-0
导体材料	Conductor Material	Copper alloy
导体表面镀层	Plating of conductor surface	Sn plated

一般参数 Other Data		
间距/极数	Pitch/Poles [mm]/[P]	3.5/2~24
剥线长度	Stripping Length [mm]	9~10
螺丝/扭矩	Screw/Torque(Max)[N.m]	/
工作温度	Operating temperature[℃]	-40~+105
焊锡温度	Soldering temperature	/
引针尺寸	Pin dimensions [mm]	/
PCB板孔径	PCB Hole Diameter [mm]	/

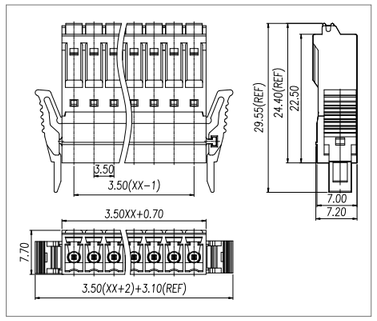

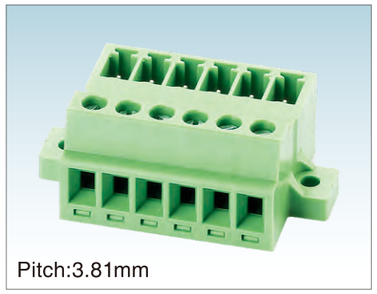

Pitch:3.81mm

WJ15EDGGB-3.81

UL/CUL 技术参数 UL/CUL Technical Data				
等级	Use Group	B	C	D
额定电压	Rated Voltage [V]	300	-	300
额定电流	Rated Current [A]	8	-	8
接线范围 Wire Range	单芯线 Solid [AWG]	28~16		
	多芯线 Stranded [AWG]	28~16		
耐电压	Dielectric Voltage-Withstand	1.6KV		

IEC 技术参数 IEC Technical Data				
过电压类别	Overvoltage Category	Ⅲ	Ⅲ	Ⅱ
污染等级	Contamination Class	3	2	2
额定电压	Rated Voltage [V]	160	160	320
额定电流	Rated Current [A]	8	8	8
额定冲击电压	Impulse withstand voltage [KV]	2.5	2.5	2.5
导线截面积 Conductor cross section	硬质导线 Solid[mm²]	0.2~1.5		
	柔性导线 Flexible[mm²]	0.2~1.5		

材料 Material		
绝缘材料	Insulation Material	PA66
阻燃等级	Flame retardant rating	UL94V-0
导体材料	Conductor Material	Copper alloy
导体表面镀层	Plating of conductor surface	Sn plated

一般参数 Other Data		
间距/极数	Pitch/Poles [mm]/[P]	3.81/2~24
剥线长度	Stripping Length [mm]	6-7
螺丝/扭矩	Screw/Torque(Max)[N.m]	M2/0.2
工作温度	Operating temperature[℃]	-40~+105
焊锡温度	Soldering temperature	/
引针尺寸	Pin dimensions [mm]	/
PCB板孔径	PCB Hole Diameter [mm]	/

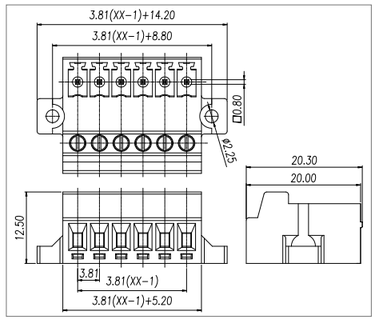



Pitch:3.81mm

WJ15EDGGBM-3.81

UL/CUL 技术参数 UL/CUL Technical Data				
等级	Use Group	B	C	D
额定电压	Rated Voltage [V]	300	-	300
额定电流	Rated Current [A]	8	-	8
接线范围 Wire Range	单芯线 Solid [AWG]	28~16		
	多芯线 Stranded [AWG]	28~16		
耐电压	Dielectric Voltage-Withstand	1.6KV		
IEC 技术参数 IEC Technical Data				
过电压类别	Overvoltage Category	Ⅲ	Ⅲ	Ⅱ
污染等级	Contamination Class	3	2	2
额定电压	Rated Voltage [V]	160	160	320
额定电流	Rated Current [A]	8	8	8
额定冲击电压	Impulse withstand voltage [KV]	2.5	2.5	2.5
导线截面积 Conductor cross section	硬质导线 Solid[mm²]	0.2~1.5		
	柔性导线 Flexible[mm²]	0.2~1.5		
材料 Material				
绝缘材料	Insulation Material	PA66		
阻燃等级	Flame retardant rating	UL94V-0		
导体材料	Conductor Material	Copper alloy		
导体表面镀层	Plating of conductor surface	Sn plated		
一般参数 Other Data				
间距/极数	Pitch/Poles [mm]/[P]	3.81/2~24		
剥线长度	Stripping Length [mm]	6-7		
螺丝/扭矩	Screw/Torque(Max)[N.m]	M2/0.2		
工作温度	Operating temperature[℃]	-40~+105		
焊锡温度	Soldering temperature	/		
引针尺寸	Pin dimensions [mm]	/		
PCB板孔径	PCB Hole Diameter [mm]	/		

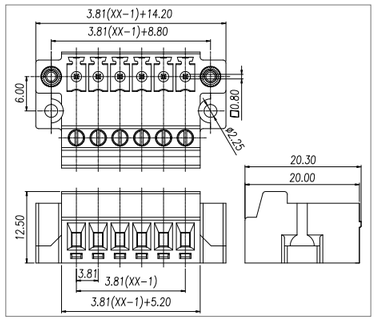

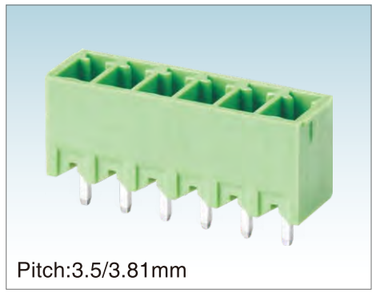

Pitch:3.5/3.81mm

WJ15EDGVC-3.5/3.81

UL/CUL 技术参数 UL/CUL Technical Data				
等级	Use Group	B	C	D
额定电压	Rated Voltage [V]	300	-	300
额定电流	Rated Current [A]	8	-	8
接线范围 Wire Range	单芯线 Solid [AWG]	/		
	多芯线 Stranded [AWG]	/		
耐电压	Dielectric Voltage-Withstand	1.6KV		
IEC 技术参数 IEC Technical Data				
过电压类别	Overvoltage Category	Ⅲ	Ⅲ	Ⅱ
污染等级	Contamination Class	3	2	2
额定电压	Rated Voltage [V]	160	160	250
额定电流	Rated Current [A]	7	7	7
额定冲击电压	Impulse withstand voltage [KV]	2.5	2.5	2.5
导线截面积 Conductor cross section	硬质导线 Solid[mm²]	/		
	柔性导线 Flexible[mm²]	/		
材料 Material				
绝缘材料	Insulation Material	PA66		
阻燃等级	Flame retardant rating	UL94V-0		
导体材料	Conductor Material	Copper alloy		
导体表面镀层	Plating of conductor surface	Sn plated		
一般参数 Other Data				
间距/极数	Pitch/Poles [mm]/[P]	3.5,3.81/2~24		
剥线长度	Stripping Length [mm]	/		
螺丝/扭矩	Screw/Torque(Max)[N.m]	/		
工作温度	Operating temperature[℃]	-40~+105		
焊锡温度	Soldering temperature	260℃ /5S		
引针尺寸	Pin dimensions [mm]	0.8*0.8		
PCB板孔径	PCB Hole Diameter [mm]	∅1.4		

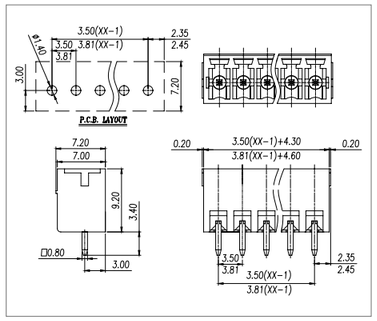

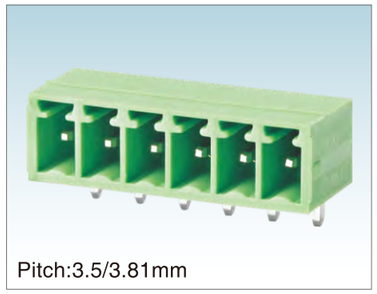

Pitch:3.5/3.81mm

WJ15EDGRC-3.5/3.81

UL/CUL 技术参数 UL/CUL Technical Data				
等级	Use Group	B	C	D
额定电压	Rated Voltage [V]	300	-	300
额定电流	Rated Current [A]	8	-	8
接线范围 Wire Range	单芯线 Solid [AWG]	/		
	多芯线 Stranded [AWG]	/		
耐电压	Dielectric Voltage-Withstand	1.6KV		
IEC 技术参数 IEC Technical Data				
过电压类别	Overvoltage Category	Ⅲ	Ⅲ	Ⅱ
污染等级	Contamination Class	3	2	2
额定电压	Rated Voltage [V]	160	160	250
额定电流	Rated Current [A]	7	7	7
额定冲击电压	Impulse withstand voltage [KV]	2.5	2.5	2.5
导线截面积 Conductor cross section	硬质导线 Solid[mm²]	/		
	柔性导线 Flexible[mm²]	/		
材料 Material				
绝缘材料	Insulation Material	PA66		
阻燃等级	Flame retardant rating	UL94V-0		
导体材料	Conductor Material	Copper alloy		
导体表面镀层	Plating of conductor surface	Sn plated		
一般参数 Other Data				
间距/极数	Pitch/Poles [mm]/[P]	3.5,3.81/2~24		
剥线长度	Stripping Length [mm]	/		
螺丝/扭矩	Screw/Torque(Max)[N.m]	/		
工作温度	Operating temperature[℃]	-40~+105		
焊锡温度	Soldering temperature	260℃ /5S		
引针尺寸	Pin dimensions [mm]	0.8*0.8		
PCB板孔径	PCB Hole Diameter [mm]	∅1.4		

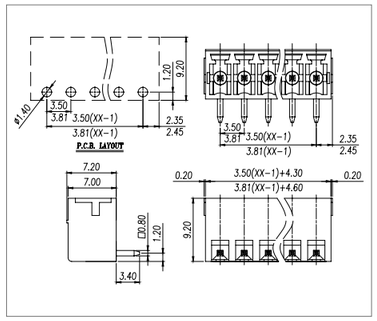

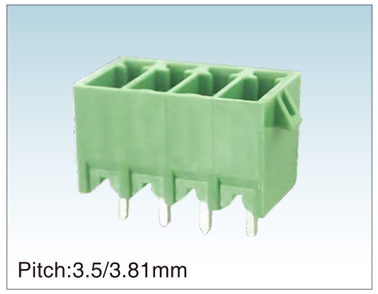

Pitch:3.5/3.81mm

WJ15EDGVG-3.5/3.81

UL/CUL 技术参数 UL/CUL Technical Data				
等级	Use Group	B	C	D
额定电压	Rated Voltage [V]	300	-	300
额定电流	Rated Current [A]	8	-	8
接线范围 Wire Range	单芯线 Solid [AWG]	/		
	多芯线 Stranded [AWG]	/		
耐电压	Dielectric Voltage-Withstand	1.6KV		
IEC 技术参数 IEC Technical Data				
过电压类别	Overvoltage Category	Ⅲ	Ⅲ	Ⅱ
污染等级	Contamination Class	3	2	2
额定电压	Rated Voltage [V]	160	160	250
额定电流	Rated Current [A]	7	7	7
额定冲击电压	Impulse withstand voltage [KV]	2.5	2.5	2.5
导线截面积 Conductor cross section	硬质导线 Solid[mm²]	/		
	柔性导线 Flexible[mm²]	/		
材料 Material				
绝缘材料	Insulation Material	PA66		
阻燃等级	Flame retardant rating	UL94V-0		
导体材料	Conductor Material	Copper alloy		
导体表面镀层	Plating of conductor surface	Sn plated		
一般参数 Other Data				
间距/极数	Pitch/Poles [mm]/[P]	3.5,3.81/2~24		
剥线长度	Stripping Length [mm]	/		
螺丝/扭矩	Screw/Torque(Max)[N.m]	/		
工作温度	Operating temperature[℃]	-40~+105		
焊锡温度	Soldering temperature	260℃ /5S		
引针尺寸	Pin dimensions [mm]	0.8*0.8		
PCB板孔径	PCB Hole Diameter [mm]	∅1.4		

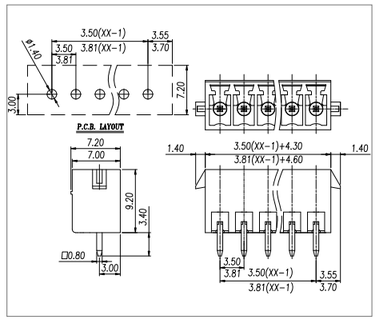



Pitch:3.5/3.81mm

WJ15EDGRG-3.5/3.81

UL/CUL 技术参数 UL/CUL Technical Data				
等级	Use Group	B	C	D
额定电压	Rated Voltage [V]	300	-	300
额定电流	Rated Current [A]	8	-	8
接线范围 Wire Range	单芯线 Solid [AWG]	/		
	多芯线 Stranded [AWG]	/		
耐电压	Dielectric Voltage-Withstand	1.6KV		
IEC 技术参数 IEC Technical Data				
过电压类别	Overvoltage Category	Ⅲ	Ⅲ	Ⅱ
污染等级	Contamination Class	3	2	2
额定电压	Rated Voltage [V]	160	160	250
额定电流	Rated Current [A]	7	7	7
额定冲击电压	Impulse withstand voltage [KV]	2.5	2.5	2.5
导线截面积 Conductor cross section	硬质导线 Solid[mm²]	/		
	柔性导线 Flexible[mm²]	/		
材料 Material				
绝缘材料	Insulation Material	PA66		
阻燃等级	Flame retardant rating	UL94V-0		
导体材料	Conductor Material	Copper alloy		
导体表面镀层	Plating of conductor surface	Sn plated		
一般参数 Other Data				
间距/极数	Pitch/Poles [mm]/[P]	3.5,3.81/2~24		
剥线长度	Stripping Length [mm]	/		
螺丝/扭矩	Screw/Torque(Max)[N.m]	/		
工作温度	Operating temperature[℃]	-40~+105		
焊锡温度	Soldering temperature	260℃ /5S		
引针尺寸	Pin dimensions [mm]	0.8*0.8		
PCB板孔径	PCB Hole Diameter [mm]	∅1.4		

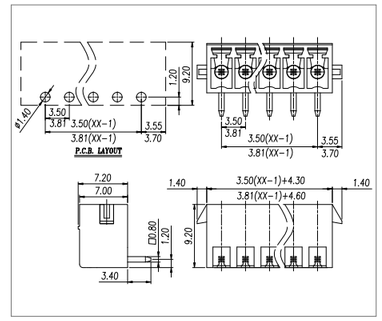

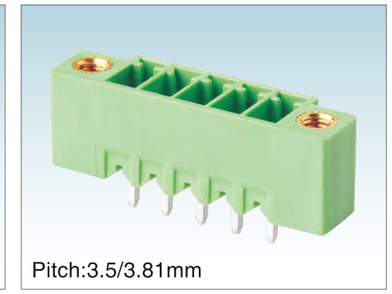

Pitch:3.5/3.81mm

WJ15EDGVM-3.5/3.81

UL/CUL 技术参数 UL/CUL Technical Data				
等级	Use Group	B	C	D
额定电压	Rated Voltage [V]	300	-	300
额定电流	Rated Current [A]	8	-	8
接线范围 Wire Range	单芯线 Solid [AWG]	/		
	多芯线 Stranded [AWG]	/		
耐电压	Dielectric Voltage-Withstand	1.6KV		
IEC 技术参数 IEC Technical Data				
过电压类别	Overvoltage Category	Ⅲ	Ⅲ	Ⅱ
污染等级	Contamination Class	3	2	2
额定电压	Rated Voltage [V]	160	160	250
额定电流	Rated Current [A]	7	7	7
额定冲击电压	Impulse withstand voltage [KV]	2.5	2.5	2.5
导线截面积 Conductor cross section	硬质导线 Solid[mm²]	/		
	柔性导线 Flexible[mm²]	/		
材料 Material				
绝缘材料	Insulation Material	PA66		
阻燃等级	Flame retardant rating	UL94V-0		
导体材料	Conductor Material	Copper alloy		
导体表面镀层	Plating of conductor surface	Sn plated		
一般参数 Other Data				
间距/极数	Pitch/Poles [mm]/[P]	3.5,3.81/2~24		
剥线长度	Stripping Length [mm]	/		
螺丝/扭矩	Screw/Torque(Max)[N.m]	/		
工作温度	Operating temperature[℃]	-40~+105		
焊锡温度	Soldering temperature	260℃ /5S		
引针尺寸	Pin dimensions [mm]	0.8*0.8		
PCB板孔径	PCB Hole Diameter [mm]	∅1.4		

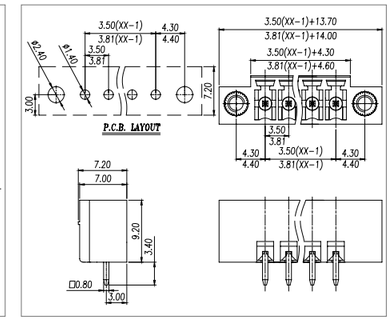

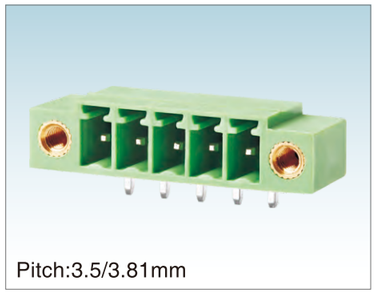

Pitch:3.5/3.81mm

WJ15EDGRM-3.5/3.81

UL/CUL 技术参数 UL/CUL Technical Data				
等级	Use Group	B	C	D
额定电压	Rated Voltage [V]	300	-	300
额定电流	Rated Current [A]	8	-	8
接线范围 Wire Range	单芯线 Solid [AWG]	/		
	多芯线 Stranded [AWG]	/		
耐电压	Dielectric Voltage-Withstand	1.6KV		
IEC 技术参数 IEC Technical Data				
过电压类别	Overvoltage Category	Ⅲ	Ⅲ	Ⅱ
污染等级	Contamination Class	3	2	2
额定电压	Rated Voltage [V]	160	160	250
额定电流	Rated Current [A]	7	7	7
额定冲击电压	Impulse withstand voltage [KV]	2.5	2.5	2.5
导线截面积 Conductor cross section	硬质导线 Solid[mm²]	/		
	柔性导线 Flexible[mm²]	/		
材料 Material				
绝缘材料	Insulation Material	PA66		
阻燃等级	Flame retardant rating	UL94V-0		
导体材料	Conductor Material	Copper alloy		
导体表面镀层	Plating of conductor surface	Sn plated		
一般参数 Other Data				
间距/极数	Pitch/Poles [mm]/[P]	3.5,3.81/2~24		
剥线长度	Stripping Length [mm]	/		
螺丝/扭矩	Screw/Torque(Max)[N.m]	/		
工作温度	Operating temperature[℃]	-40~+105		
焊锡温度	Soldering temperature	260℃ /5S		
引针尺寸	Pin dimensions [mm]	0.8*0.8		
PCB板孔径	PCB Hole Diameter [mm]	∅1.4		

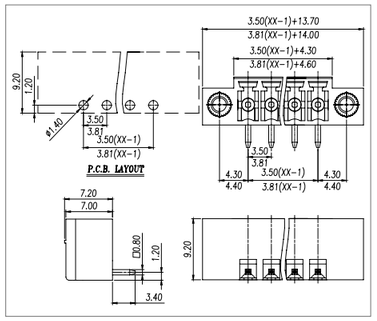

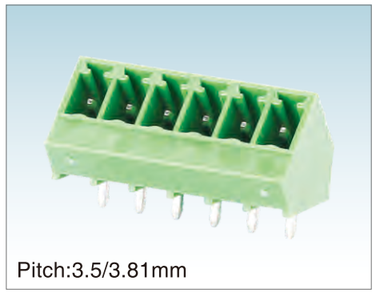

Pitch:3.5/3.81mm

WJ15EDGLC-3.5/3.81

UL/CUL 技术参数 UL/CUL Technical Data				
等级	Use Group	B	C	D
额定电压	Rated Voltage [V]	300	-	300
额定电流	Rated Current [A]	8	-	8
接线范围 Wire Range	单芯线 Solid [AWG]	/		
	多芯线 Stranded [AWG]	/		
耐电压	Dielectric Voltage-Withstand	1.6KV		
IEC 技术参数 IEC Technical Data				
过电压类别	Overvoltage Category	Ⅲ	Ⅲ	Ⅱ
污染等级	Contamination Class	3	2	2
额定电压	Rated Voltage [V]	160	160	320
额定电流	Rated Current [A]	8	8	8
额定冲击电压	Impulse withstand voltage [KV]	2.5	2.5	2.5
导线截面积 Conductor cross section	硬质导线 Solid[mm²]	/		
	柔性导线 Flexible[mm²]	/		
材料 Material				
绝缘材料	Insulation Material	PA66		
阻燃等级	Flame retardant rating	UL94V-0		
导体材料	Conductor Material	Copper alloy		
导体表面镀层	Plating of conductor surface	Sn plated		
一般参数 Other Data				
间距/极数	Pitch/Poles [mm]/[P]	3.5,3.81/2~24		
剥线长度	Stripping Length [mm]	/		
螺丝/扭矩	Screw/Torque(Max)[N.m]	/		
工作温度	Operating temperature[℃]	-40~+105		
焊锡温度	Soldering temperature	260℃ /5S		
引针尺寸	Pin dimensions [mm]	0.8*0.8		
PCB板孔径	PCB Hole Diameter [mm]	∅1.4		

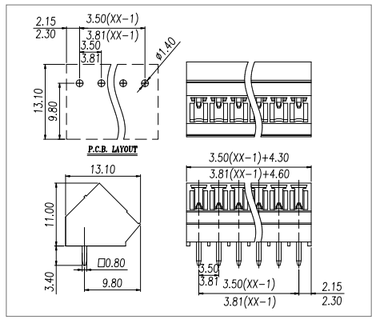

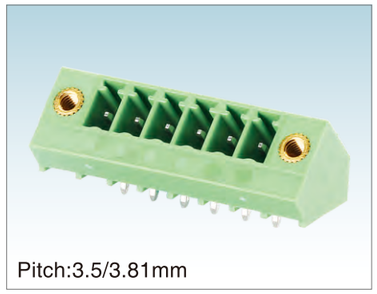

Pitch:3.5/3.81mm

WJ15EDGLM-3.5/3.81

UL/CUL 技术参数 UL/CUL Technical Data				
等级	Use Group	B	C	D
额定电压	Rated Voltage [V]	300	-	300
额定电流	Rated Current [A]	8	-	8
接线范围 Wire Range	单芯线 Solid [AWG]	/		
	多芯线 Stranded [AWG]	/		
耐电压	Dielectric Voltage-Withstand	1.6KV		
IEC 技术参数 IEC Technical Data				
过电压类别	Overvoltage Category	Ⅲ	Ⅲ	Ⅱ
污染等级	Contamination Class	3	2	2
额定电压	Rated Voltage [V]	160	160	320
额定电流	Rated Current [A]	8	8	8
额定冲击电压	Impulse withstand voltage [KV]	2.5	2.5	2.5
导线截面积 Conductor cross section	硬质导线 Solid[mm²]	/		
	柔性导线 Flexible[mm²]	/		
材料 Material				
绝缘材料	Insulation Material	PA66		
阻燃等级	Flame retardant rating	UL94V-0		
导体材料	Conductor Material	Copper alloy		
导体表面镀层	Plating of conductor surface	Sn plated		
一般参数 Other Data				
间距/极数	Pitch/Poles [mm]/[P]	3.5,3.81/2~24		
剥线长度	Stripping Length [mm]	/		
螺丝/扭矩	Screw/Torque(Max)[N.m]	/		
工作温度	Operating temperature[℃]	-40~+105		
焊锡温度	Soldering temperature	260℃ /5S		
引针尺寸	Pin dimensions [mm]	0.8*0.8		
PCB板孔径	PCB Hole Diameter [mm]	∅1.4		

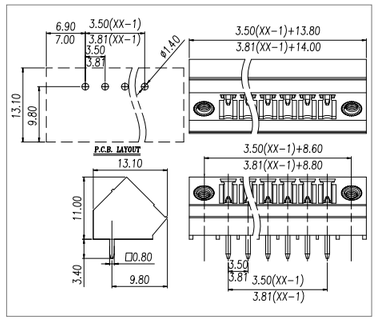



Pitch:3.81mm

WJ15CDGM-3.81

UL/CUL 技术参数 UL/CUL Technical Data				
等级	Use Group	B	C	D
额定电压	Rated Voltage [V]	300	-	300
额定电流	Rated Current [A]	8	-	8
接线范围 Wire Range	单芯线 Solid [AWG]	/		
	多芯线 Stranded [AWG]	/		
耐电压	Dielectric Voltage-Withstand	1.6KV		
IEC 技术参数 IEC Technical Data				
过电压类别	Overvoltage Category	Ⅲ	Ⅲ	Ⅱ
污染等级	Contamination Class	3	2	2
额定电压	Rated Voltage [V]	160	160	320
额定电流	Rated Current [A]	8	8	8
额定冲击电压	Impulse withstand voltage [KV]	2.5	2.5	2.5
导线截面积 Conductor cross section	硬质导线 Solid[mm²]	/		
	柔性导线 Flexible[mm²]	/		
材料 Material				
绝缘材料	Insulation Material	PA66		
阻燃等级	Flame retardant rating	UL94V-0		
导体材料	Conductor Material	Copper alloy		
导体表面镀层	Plating of conductor surface	Sn plated		
一般参数 Other Data				
间距/极数	Pitch/Poles [mm]/[P]	3.81/2~24		
剥线长度	Stripping Length [mm]	/		
螺丝/扭矩	Screw/Torque(Max)[N.m]	/		
工作温度	Operating temperature[℃]	-40~+105		
焊锡温度	Soldering temperature	/		
引针尺寸	Pin dimensions [mm]	/		
PCB板孔径	PCB Hole Diameter [mm]	/		

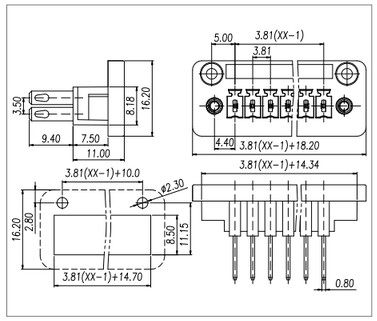



Pitch:3.81mm

WJ15EDGVF-3.81

UL/CUL 技术参数 UL/CUL Technical Data				
等级	Use Group	B	C	D
额定电压	Rated Voltage [V]	300	-	300
额定电流	Rated Current [A]	8	-	8
接线范围 Wire Range	单芯线 Solid [AWG]	/		
	多芯线 Stranded [AWG]	/		
耐电压	Dielectric Voltage-Withstand	1.6KV		
IEC 技术参数 IEC Technical Data				
过电压类别	Overvoltage Category	Ⅲ	Ⅲ	Ⅱ
污染等级	Contamination Class	3	2	2
额定电压	Rated Voltage [V]	160	160	250
额定电流	Rated Current [A]	7	7	7
额定冲击电压	Impulse withstand voltage [KV]	2.5	2.5	2.5
导线截面积 Conductor cross section	硬质导线 Solid[mm²]	/		
	柔性导线 Flexible[mm²]	/		
材料 Material				
绝缘材料	Insulation Material	PA66		
阻燃等级	Flame retardant rating	UL94V-0		
导体材料	Conductor Material	Copper alloy		
导体表面镀层	Plating of conductor surface	Sn plated		
一般参数 Other Data				
间距/极数	Pitch/Poles [mm]/[P]	3.81/2~4		
剥线长度	Stripping Length [mm]	/		
螺丝/扭矩	Screw/Torque(Max)[N.m]	/		
工作温度	Operating temperature[℃]	-40~+105		
焊锡温度	Soldering temperature	260℃ /5S		
引针尺寸	Pin dimensions [mm]	/		
PCB板孔径	PCB Hole Diameter [mm]	/		

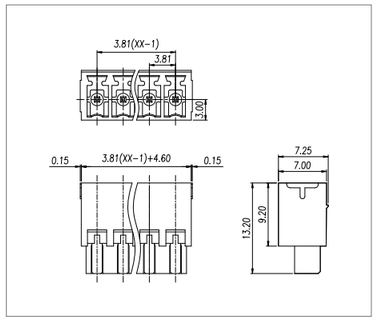



Pitch:5.08mm

WJ15EDGK-5.08

UL/CUL 技术参数 UL/CUL Technical Data				
等级	Use Group	B	C	D
额定电压	Rated Voltage [V]	300	-	300
额定电流	Rated Current [A]	8	-	8
接线范围 Wire Range	单芯线 Solid [AWG]	28~16		
	多芯线 Stranded [AWG]	28~16		
耐电压	Dielectric Voltage-Withstand	1.6KV		
IEC 技术参数 IEC Technical Data				
过电压类别	Overvoltage Category	Ⅲ	Ⅲ	Ⅱ
污染等级	Contamination Class	3	2	2
额定电压	Rated Voltage [V]	250	320	630
额定电流	Rated Current [A]	8	8	8
额定冲击电压	Impulse withstand voltage [KV]	4	4	4
导线截面积 Conductor cross section	硬质导线 Solid[mm²]	0.2~1.5		
	柔性导线 Flexible[mm²]	0.2~1.5		
材料 Material				
绝缘材料	Insulation Material	PA66		
阻燃等级	Flame retardant rating	UL94V-0		
导体材料	Conductor Material	Copper alloy		
导体表面镀层	Plating of conductor surface	Sn plated		
一般参数 Other Data				
间距/极数	Pitch/Poles [mm]/[P]	5.08/2~24		
剥线长度	Stripping Length [mm]	6~7		
螺丝/扭矩	Screw/Torque(Max)[N.m]	M2/0.2		
工作温度	Operating temperature[℃]	-40~+105		
焊锡温度	Soldering temperature	/		
引针尺寸	Pin dimensions [mm]	/		
PCB板孔径	PCB Hole Diameter [mm]	/		

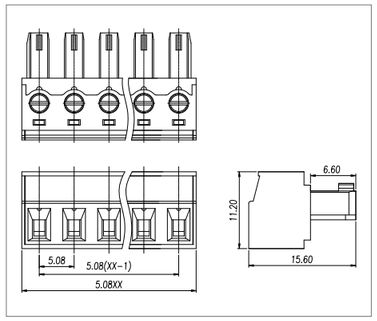

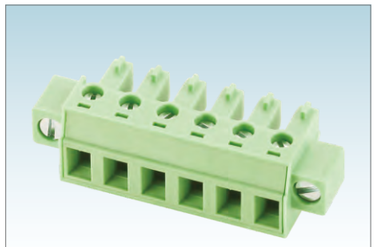

Pitch:5.08mm

WJ15EDGKM-5.08

UL/CUL 技术参数 UL/CUL Technical Data				
等级	Use Group	B	C	D
额定电压	Rated Voltage [V]	300	-	300
额定电流	Rated Current [A]	8	-	8
接线范围 Wire Range	单芯线 Solid [AWG]	28~16		
	多芯线 Stranded [AWG]	28~16		
耐电压	Dielectric Voltage-Withstand	1.6KV		
IEC 技术参数 IEC Technical Data				
过电压类别	Overvoltage Category	Ⅲ	Ⅲ	Ⅱ
污染等级	Contamination Class	3	2	2
额定电压	Rated Voltage [V]	250	320	630
额定电流	Rated Current [A]	8	8	8
额定冲击电压	Impulse withstand voltage [KV]	4	4	4
导线截面积 Conductor cross section	硬质导线 Solid[mm²]	0.2~1.5		
	柔性导线 Flexible[mm²]	0.2~1.5		
材料 Material				
绝缘材料	Insulation Material	PA66		
阻燃等级	Flame retardant rating	UL94V-0		
导体材料	Conductor Material	Copper alloy		
导体表面镀层	Plating of conductor surface	Sn plated		
一般参数 Other Data				
间距/极数	Pitch/Poles [mm]/[P]	5.08/2~24		
剥线长度	Stripping Length [mm]	6~7		
螺丝/扭矩	Screw/Torque(Max)[N.m]	M2/0.2		
工作温度	Operating temperature[℃]	-40~+105		
焊锡温度	Soldering temperature	/		
引针尺寸	Pin dimensions [mm]	/		
PCB板孔径	PCB Hole Diameter [mm]	/		

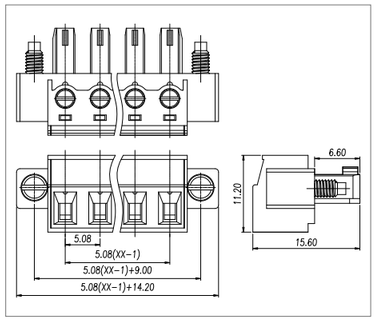

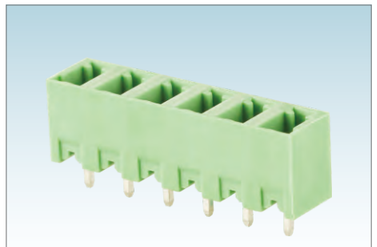

Pitch:5.08mm

WJ15EDGVC-5.08

UL/CUL 技术参数 UL/CUL Technical Data				
等级	Use Group	B	C	D
额定电压	Rated Voltage [V]	300	-	300
额定电流	Rated Current [A]	8	-	8
接线范围 Wire Range	单芯线 Solid [AWG]	/		
	多芯线 Stranded [AWG]	/		
耐电压	Dielectric Voltage-Withstand	1.6KV		
IEC 技术参数 IEC Technical Data				
过电压类别	Overvoltage Category	Ⅲ	Ⅲ	Ⅱ
污染等级	Contamination Class	3	2	2
额定电压	Rated Voltage [V]	250	320	400
额定电流	Rated Current [A]	8	8	8
额定冲击电压	Impulse withstand voltage [KV]	4	4	4
导线截面积 Conductor cross section	硬质导线 Solid[mm²]	/		
	柔性导线 Flexible[mm²]	/		
材料 Material				
绝缘材料	Insulation Material	PA66		
阻燃等级	Flame retardant rating	UL94V-0		
导体材料	Conductor Material	Copper alloy		
导体表面镀层	Plating of conductor surface	Sn plated		
一般参数 Other Data				
间距/极数	Pitch/Poles [mm]/[P]	5.08/2~24		
剥线长度	Stripping Length [mm]	/		
螺丝/扭矩	Screw/Torque(Max)[N.m]	/		
工作温度	Operating temperature[℃]	-40~+105		
焊锡温度	Soldering temperature	260℃ /5S		
引针尺寸	Pin dimensions [mm]	0.8*0.8		
PCB板孔径	PCB Hole Diameter [mm]	∅1.4		

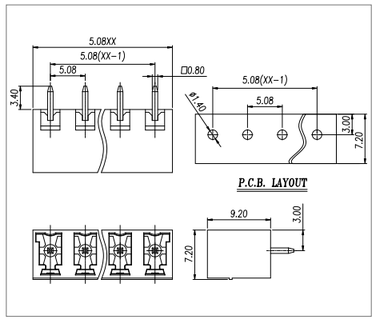

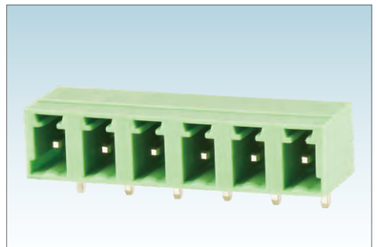

Pitch:5.08mm

WJ15EDGRC-5.08

UL/CUL 技术参数 UL/CUL Technical Data				
等级	Use Group	B	C	D
额定电压	Rated Voltage [V]	300	-	300
额定电流	Rated Current [A]	8	-	8
接线范围 Wire Range	单芯线 Solid [AWG]	/		
	多芯线 Stranded [AWG]	/		
耐电压	Dielectric Voltage-Withstand	1.6KV		
IEC 技术参数 IEC Technical Data				
过电压类别	Overvoltage Category	Ⅲ	Ⅲ	Ⅱ
污染等级	Contamination Class	3	2	2
额定电压	Rated Voltage [V]	250	320	400
额定电流	Rated Current [A]	8	8	8
额定冲击电压	Impulse withstand voltage [KV]	4	4	4
导线截面积 Conductor cross section	硬质导线 Solid[mm²]	/		
	柔性导线 Flexible[mm²]	/		
材料 Material				
绝缘材料	Insulation Material	PA66		
阻燃等级	Flame retardant rating	UL94V-0		
导体材料	Conductor Material	Copper alloy		
导体表面镀层	Plating of conductor surface	Sn plated		
一般参数 Other Data				
间距/极数	Pitch/Poles [mm]/[P]	5.08/2~24		
剥线长度	Stripping Length [mm]	/		
螺丝/扭矩	Screw/Torque(Max)[N.m]	/		
工作温度	Operating temperature[℃]	-40~+105		
焊锡温度	Soldering temperature	260℃ /5S		
引针尺寸	Pin dimensions [mm]	0.8*0.8		
PCB板孔径	PCB Hole Diameter [mm]	∅1.4		

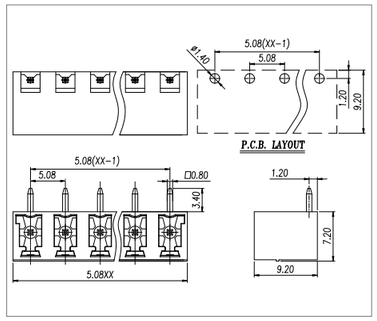

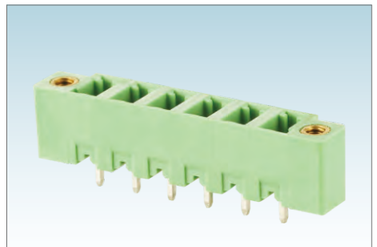

Pitch:5.08mm

WJ15EDGVM-5.08

UL/CUL 技术参数 UL/CUL Technical Data				
等级	Use Group	B	C	D
额定电压	Rated Voltage [V]	300	-	300
额定电流	Rated Current [A]	8	-	8
接线范围 Wire Range	单芯线 Solid [AWG]	/		
	多芯线 Stranded [AWG]	/		
耐电压	Dielectric Voltage-Withstand	1.6KV		
IEC 技术参数 IEC Technical Data				
过电压类别	Overvoltage Category	Ⅲ	Ⅲ	Ⅱ
污染等级	Contamination Class	3	2	2
额定电压	Rated Voltage [V]	250	320	400
额定电流	Rated Current [A]	8	8	8
额定冲击电压	Impulse withstand voltage [KV]	4	4	4
导线截面积 Conductor cross section	硬质导线 Solid[mm²]	/		
	柔性导线 Flexible[mm²]	/		
材料 Material				
绝缘材料	Insulation Material	PA66		
阻燃等级	Flame retardant rating	UL94V-0		
导体材料	Conductor Material	Copper alloy		
导体表面镀层	Plating of conductor surface	Sn plated		
一般参数 Other Data				
间距/极数	Pitch/Poles [mm]/[P]	5.08/2~24		
剥线长度	Stripping Length [mm]	/		
螺丝/扭矩	Screw/Torque(Max)[N.m]	/		
工作温度	Operating temperature[℃]	-40~+105		
焊锡温度	Soldering temperature	260℃ /5S		
引针尺寸	Pin dimensions [mm]	0.8*0.8		
PCB板孔径	PCB Hole Diameter [mm]	∅1.4		

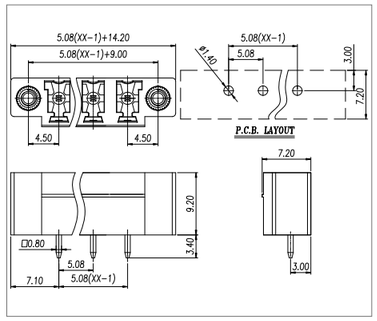



Pitch:5.08mm

WJ15EDGRM-5.08

UL/CUL 技术参数 UL/CUL Technical Data				
等级	Use Group	B	C	D
额定电压	Rated Voltage [V]	300	-	300
额定电流	Rated Current [A]	8	-	8
接线范围 Wire Range	单芯线 Solid [AWG]	/		
	多芯线 Stranded [AWG]	/		
耐电压	Dielectric Voltage-Withstand	1.6KV		
IEC 技术参数 IEC Technical Data				
过电压类别	Overvoltage Category	Ⅲ	Ⅲ	Ⅱ
污染等级	Contamination Class	3	2	2
额定电压	Rated Voltage [V]	250	320	400
额定电流	Rated Current [A]	8	8	8
额定冲击电压	Impulse withstand voltage [KV]	4	4	4
导线截面积 Conductor cross section	硬质导线 Solid[mm²]	/		
	柔性导线 Flexible[mm²]	/		
材料 Material				
绝缘材料	Insulation Material	PA66		
阻燃等级	Flame retardant rating	UL94V-0		
导体材料	Conductor Material	Copper alloy		
导体表面镀层	Plating of conductor surface	Sn plated		
一般参数 Other Data				
间距/极数	Pitch/Poles [mm]/[P]	5.08/2~24		
剥线长度	Stripping Length [mm]	/		
螺丝/扭矩	Screw/Torque(Max)[N.m]	/		
工作温度	Operating temperature[℃]	-40~+105		
焊锡温度	Soldering temperature	260℃ /5S		
引针尺寸	Pin dimensions [mm]	0.8*0.8		
PCB板孔径	PCB Hole Diameter [mm]	∅1.4		

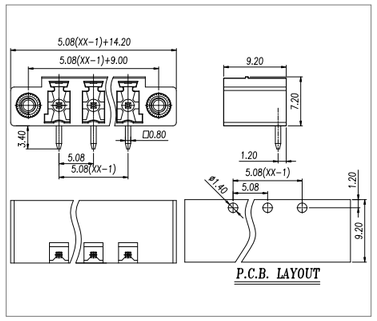



Pitch:3.5/3.81mm

WJ15EDGVT-3.5/3.81

UL/CUL 技术参数 UL/CUL Technical Data				
等级	Use Group	B	C	D
额定电压	Rated Voltage [V]	300	-	300
额定电流	Rated Current [A]	8	-	8
接线范围 Wire Range	单芯线 Solid [AWG]	/		
	多芯线 Stranded [AWG]	/		
耐电压	Dielectric Voltage-Withstand	1.6KV		
IEC 技术参数 IEC Technical Data				
过电压类别	Overvoltage Category	Ⅲ	Ⅲ	Ⅱ
污染等级	Contamination Class	3	2	2
额定电压	Rated Voltage [V]	160	160	320
额定电流	Rated Current [A]	8	8	8
额定冲击电压	Impulse withstand voltage [KV]	2.5	2.5	2.5
导线截面积 Conductor cross section	硬质导线 Solid[mm²]	/		
	柔性导线 Flexible[mm²]	/		
材料 Material				
绝缘材料	Insulation Material	PA66		
阻燃等级	Flame retardant rating	UL94V-0		
导体材料	Conductor Material	Copper alloy		
导体表面镀层	Plating of conductor surface	Sn plated		
一般参数 Other Data				
间距/极数	Pitch/Poles [mm]/[P]	3.5,3.81/ 2*2~2*24		
剥线长度	Stripping Length [mm]	/		
螺丝/扭矩	Screw/Torque(Max)[N.m]	/		
工作温度	Operating temperature[℃]	-40~+105		
焊锡温度	Soldering temperature	260℃ /5S		
引针尺寸	Pin dimensions [mm]	0.8*0.8		
PCB板孔径	PCB Hole Diameter [mm]	∅1.4		

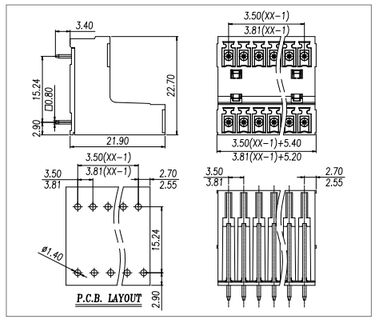

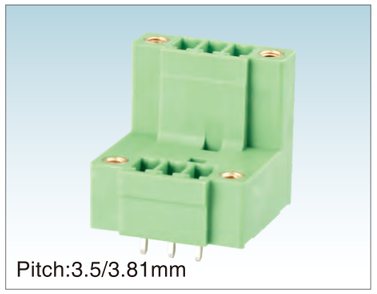

Pitch:3.5/3.81mm

WJ15EDGVTM-3.5/3.81

UL/CUL 技术参数 UL/CUL Technical Data				
等级	Use Group	B	C	D
额定电压	Rated Voltage [V]	300	-	300
额定电流	Rated Current [A]	8	-	8
接线范围 Wire Range	单芯线 Solid [AWG]	/		
	多芯线 Stranded [AWG]	/		
耐电压	Dielectric Voltage-Withstand	1.6KV		
IEC 技术参数 IEC Technical Data				
过电压类别	Overvoltage Category	Ⅲ	Ⅲ	Ⅱ
污染等级	Contamination Class	3	2	2
额定电压	Rated Voltage [V]	160	160	320
额定电流	Rated Current [A]	8	8	8
额定冲击电压	Impulse withstand voltage [KV]	2.5	2.5	2.5
导线截面积 Conductor cross section	硬质导线 Solid[mm²]	/		
	柔性导线 Flexible[mm²]	/		
材料 Material				
绝缘材料	Insulation Material	PA66		
阻燃等级	Flame retardant rating	UL94V-0		
导体材料	Conductor Material	Copper alloy		
导体表面镀层	Plating of conductor surface	Sn plated		
一般参数 Other Data				
间距/极数	Pitch/Poles [mm]/[P]	3.5,3.81/ 2*2~2*24		
剥线长度	Stripping Length [mm]	/		
螺丝/扭矩	Screw/Torque(Max)[N.m]	/		
工作温度	Operating temperature[℃]	-40~+105		
焊锡温度	Soldering temperature	260℃ /5S		
引针尺寸	Pin dimensions [mm]	0.8*0.8		
PCB板孔径	PCB Hole Diameter [mm]	∅1.4		

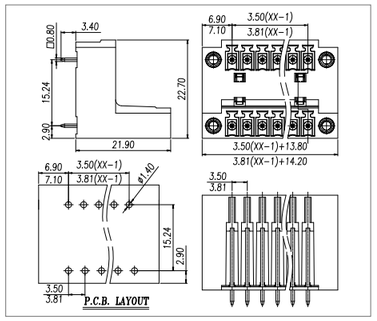



Pitch:3.5/3.81mm

WJ15EDGRT-3.5/3.81

UL/CUL 技术参数 UL/CUL Technical Data				
等级	Use Group	B	C	D
额定电压	Rated Voltage [V]	300	-	300
额定电流	Rated Current [A]	8	-	8
接线范围 Wire Range	单芯线 Solid [AWG]	/		
	多芯线 Stranded [AWG]	/		
耐电压	Dielectric Voltage-Withstand	1.6KV		
IEC 技术参数 IEC Technical Data				
过电压类别	Overvoltage Category	Ⅲ	Ⅲ	Ⅱ
污染等级	Contamination Class	3	2	2
额定电压	Rated Voltage [V]	160	160	320
额定电流	Rated Current [A]	8	8	8
额定冲击电压	Impulse withstand voltage [KV]	2.5	2.5	2.5
导线截面积 Conductor cross section	硬质导线 Solid[mm²]	/		
	柔性导线 Flexible[mm²]	/		
材料 Material				
绝缘材料	Insulation Material	PA66		
阻燃等级	Flame retardant rating	UL94V-0		
导体材料	Conductor Material	Copper alloy		
导体表面镀层	Plating of conductor surface	Sn plated		
一般参数 Other Data				
间距/极数	Pitch/Poles [mm]/[P]	3.5,3.81/ 2*2~2*24		
剥线长度	Stripping Length [mm]	/		
螺丝/扭矩	Screw/Torque(Max)[N.m]	/		
工作温度	Operating temperature[℃]	-40~+105		
焊锡温度	Soldering temperature	260℃ /5S		
引针尺寸	Pin dimensions [mm]	0.8*0.8		
PCB板孔径	PCB Hole Diameter [mm]	∅1.4		

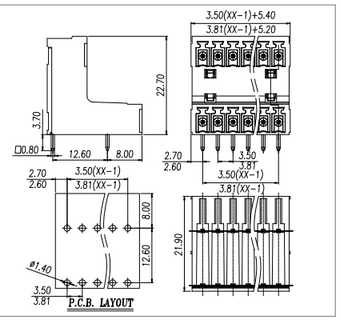

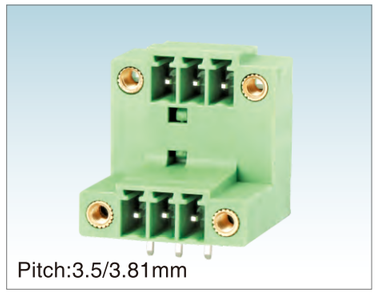

Pitch:3.5/3.81mm

WJ15EDGRTM-3.5/3.81

UL/CUL 技术参数 UL/CUL Technical Data				
等级	Use Group	B	C	D
额定电压	Rated Voltage [V]	300	-	300
额定电流	Rated Current [A]	8	-	8
接线范围 Wire Range	单芯线 Solid [AWG]	/		
	多芯线 Stranded [AWG]	/		
耐电压	Dielectric Voltage-Withstand	1.6KV		
IEC 技术参数 IEC Technical Data				
过电压类别	Overvoltage Category	Ⅲ	Ⅲ	Ⅱ
污染等级	Contamination Class	3	2	2
额定电压	Rated Voltage [V]	160	160	320
额定电流	Rated Current [A]	8	8	8
额定冲击电压	Impulse withstand voltage [KV]	2.5	2.5	2.5
导线截面积 Conductor cross section	硬质导线 Solid[mm²]	/		
	柔性导线 Flexible[mm²]	/		
材料 Material				
绝缘材料	Insulation Material	PA66		
阻燃等级	Flame retardant rating	UL94V-0		
导体材料	Conductor Material	Copper alloy		
导体表面镀层	Plating of conductor surface	Sn plated		
一般参数 Other Data				
间距/极数	Pitch/Poles [mm]/[P]	3.5,3.81/ 2*2~2*24		
剥线长度	Stripping Length [mm]	/		
螺丝/扭矩	Screw/Torque(Max)[N.m]	/		
工作温度	Operating temperature[℃]	-40~+105		
焊锡温度	Soldering temperature	260℃ /5S		
引针尺寸	Pin dimensions [mm]	0.8*0.8		
PCB板孔径	PCB Hole Diameter [mm]	∅1.4		

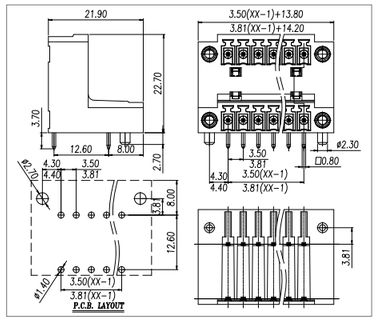



Pitch:3.5/3.81mm

WJ15EDGVH-3.5/3.81

UL/CUL 技术参数 UL/CUL Technical Data				
等级	Use Group	B	C	D
额定电压	Rated Voltage [V]	300	-	300
额定电流	Rated Current [A]	8	-	8
接线范围 Wire Range	单芯线 Solid [AWG]	/		
	多芯线 Stranded [AWG]	/		
耐电压	Dielectric Voltage-Withstand	1.6KV		
IEC 技术参数 IEC Technical Data				
过电压类别	Overvoltage Category	Ⅲ	Ⅲ	Ⅱ
污染等级	Contamination Class	3	2	2
额定电压	Rated Voltage [V]	160	160	320
额定电流	Rated Current [A]	7	7	7
额定冲击电压	Impulse withstand voltage [KV]	2.5	2.5	2.5
导线截面积 Conductor cross section	硬质导线 Solid[mm²]	/		
	柔性导线 Flexible[mm²]	/		
材料 Material				
绝缘材料	Insulation Material	PA66		
阻燃等级	Flame retardant rating	UL94V-0		
导体材料	Conductor Material	Copper alloy		
导体表面镀层	Plating of conductor surface	Sn plated		
一般参数 Other Data				
间距/极数	Pitch/Poles [mm]/[P]	3.5,3.81/ 2*2~2*24		
剥线长度	Stripping Length [mm]	/		
螺丝/扭矩	Screw/Torque(Max)[N.m]	/		
工作温度	Operating temperature[℃]	-40~+105		
焊锡温度	Soldering temperature	260℃ /5S		
引针尺寸	Pin dimensions [mm]	0.8*0.8		
PCB板孔径	PCB Hole Diameter [mm]	∅1.4		

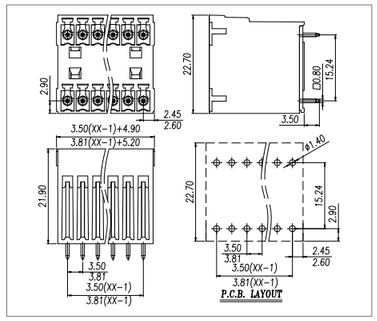

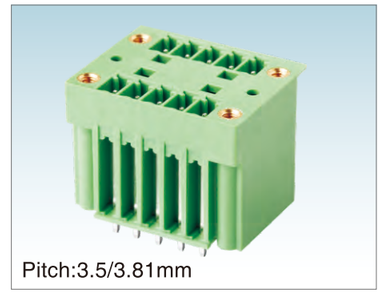

Pitch:3.5/3.81mm

WJ15EDGVHM-3.5/3.81

UL/CUL 技术参数 UL/CUL Technical Data				
等级	Use Group	B	C	D
额定电压	Rated Voltage [V]	300	-	300
额定电流	Rated Current [A]	8	-	8
接线范围 Wire Range	单芯线 Solid [AWG]	/		
	多芯线 Stranded [AWG]	/		
耐电压	Dielectric Voltage-Withstand	1.6KV		
IEC 技术参数 IEC Technical Data				
过电压类别	Overvoltage Category	Ⅲ	Ⅲ	Ⅱ
污染等级	Contamination Class	3	2	2
额定电压	Rated Voltage [V]	160	160	320
额定电流	Rated Current [A]	7	7	7
额定冲击电压	Impulse withstand voltage [KV]	2.5	2.5	2.5
导线截面积 Conductor cross section	硬质导线 Solid[mm²]	/		
	柔性导线 Flexible[mm²]	/		
材料 Material				
绝缘材料	Insulation Material	PA66		
阻燃等级	Flame retardant rating	UL94V-0		
导体材料	Conductor Material	Copper alloy		
导体表面镀层	Plating of conductor surface	Sn plated		
一般参数 Other Data				
间距/极数	Pitch/Poles [mm]/[P]	3.5,3.81/ 2*2~2*24		
剥线长度	Stripping Length [mm]	/		
螺丝/扭矩	Screw/Torque(Max)[N.m]	/		
工作温度	Operating temperature[℃]	-40~+105		
焊锡温度	Soldering temperature	260℃ /5S		
引针尺寸	Pin dimensions [mm]	0.8*0.8		
PCB板孔径	PCB Hole Diameter [mm]	∅1.4		

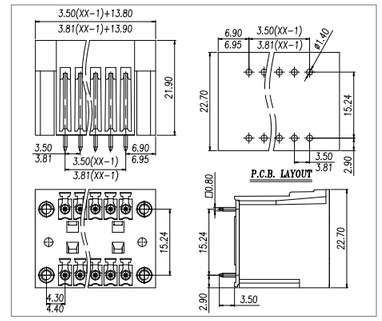

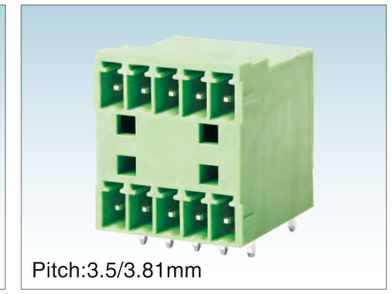

Pitch:3.5/3.81mm

WJ15EDGRH-3.5/3.81

UL/CUL 技术参数 UL/CUL Technical Data				
等级	Use Group	B	C	D
额定电压	Rated Voltage [V]	300	-	300
额定电流	Rated Current [A]	8	-	8
接线范围 Wire Range	单芯线 Solid [AWG]	/		
	多芯线 Stranded [AWG]	/		
耐电压	Dielectric Voltage-Withstand	1.6KV		
IEC 技术参数 IEC Technical Data				
过电压类别	Overvoltage Category	Ⅲ	Ⅲ	Ⅱ
污染等级	Contamination Class	3	2	2
额定电压	Rated Voltage [V]	160	160	320
额定电流	Rated Current [A]	7	7	7
额定冲击电压	Impulse withstand voltage [KV]	2.5	2.5	2.5
导线截面积 Conductor cross section	硬质导线 Solid[mm²]	/		
	柔性导线 Flexible[mm²]	/		
材料 Material				
绝缘材料	Insulation Material	PA66		
阻燃等级	Flame retardant rating	UL94V-0		
导体材料	Conductor Material	Copper alloy		
导体表面镀层	Plating of conductor surface	Sn plated		
一般参数 Other Data				
间距/极数	Pitch/Poles [mm]/[P]	3.5,3.81/ 2*2~2*24		
剥线长度	Stripping Length [mm]	/		
螺丝/扭矩	Screw/Torque(Max)[N.m]	/		
工作温度	Operating temperature[℃]	-40~+105		
焊锡温度	Soldering temperature	260℃ /5S		
引针尺寸	Pin dimensions [mm]	0.8*0.8		
PCB板孔径	PCB Hole Diameter [mm]	∅1.4		

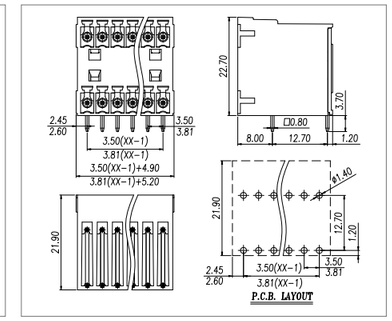

ISO14001 ISO45001 ISO9001 ISO80079-34 ISO/TS 22163



Pitch:3.5/3.81mm

WJ15EDGRHM-3.5/3.81

UL/CUL 技术参数 UL/CUL Technical Data				
等级	Use Group	B	C	D
额定电压	Rated Voltage [V]	300	-	300
额定电流	Rated Current [A]	8	-	8
接线范围 Wire Range	单芯线 Solid [AWG]	/		
	多芯线 Stranded [AWG]	/		
耐电压	Dielectric Voltage-Withstand	1.6KV		

IEC 技术参数 IEC Technical Data				
过电压类别	Overvoltage Category	Ⅲ	Ⅲ	Ⅱ
污染等级	Contamination Class	3	2	2
额定电压	Rated Voltage [V]	160	160	320
额定电流	Rated Current [A]	7	7	7
额定冲击电压	Impulse withstand voltage [KV]	2.5	2.5	2.5
导线截面积 Conductor cross section	硬质导线 Solid[mm²]	/		
	柔性导线 Flexible[mm²]	/		

材料 Material		
绝缘材料	Insulation Material	PA66
阻燃等级	Flame retardant rating	UL94V-0
导体材料	Conductor Material	Copper alloy
导体表面镀层	Plating of conductor surface	Sn plated

一般参数 Other Data		
间距/极数	Pitch/Poles [mm]/[P]	3.5,3.81/ 2*2~2*24
剥线长度	Stripping Length [mm]	/
螺丝/扭矩	Screw/Torque(Max)[N.m]	/
工作温度	Operating temperature[℃]	-40~+105
焊锡温度	Soldering temperature	260℃ /5S
引针尺寸	Pin dimensions [mm]	0.8*0. 8
PCB板孔径	PCB Hole Diameter [mm]	∅1.4

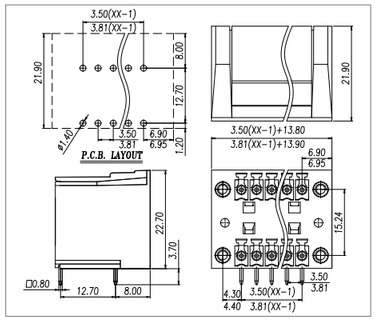



Pitch:3.5mm

WJ15EDGVH3C-3.5

UL/CUL 技术参数 UL/CUL Technical Data				
等级	Use Group	B	C	D
额定电压	Rated Voltage [V]	300	-	-
额定电流	Rated Current [A]	8	-	-
接线范围 Wire Range	单芯线 Solid [AWG]	/		
	多芯线 Stranded [AWG]	/		
耐电压	Dielectric Voltage-Withstand	1.6KV		

IEC 技术参数 IEC Technical Data				
过电压类别	Surge voltage category	Ⅲ	Ⅲ	Ⅱ
污染等级	Contamination Class	3	2	2
额定电压	Rated Voltage [V]	150	150	250
额定电流	Rated Current [A]	8	8	8
额定冲击电压	Impulse withstand voltage [KV]	2.5	2.5	2.5
导线截面积 Conductor cross section	硬质导线 Solid[mm²]	/		
	柔性导线 Flexible[mm²]	/		

材料 Material		
绝缘材料	Insulation Material	PBT
阻燃等级	Inflammability Class	UL94V-0
导体材料	Conductor Material	Copper alloy
导体表面镀层	Conductor Plating	Sn plated

一般参数 Other Data		
间距/极数	Pitch/Poles [mm]/[P]	3.5/3*2-3*24
剥线长度	Stripping Length [mm]	/
螺丝/扭矩	Screw/Torque(Max)[N.m]	/
工作温度	Operating temperature[℃]	-30~+120
焊锡温度	Soldering temperature	260℃/5S
引针尺寸	Pin dimensions [mm]	0.8*0.8
PCB板孔径	PCB Hole Diameter [mm]	∅1.4

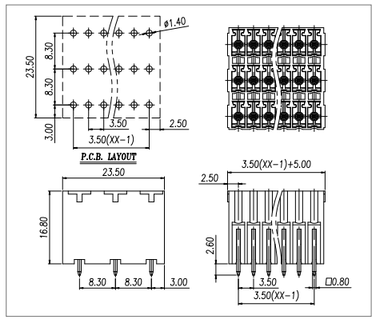



Pitch:3.5mm

WJ15EDGVH3N-3.5

UL/CUL 技术参数 UL/CUL Technical Data				
等级	Use Group	B	C	D
额定电压	Rated Voltage [V]	300	-	-
额定电流	Rated Current [A]	8	-	-
接线范围 Wire Range	单芯线 Solid [AWG]	/		
	多芯线 Stranded [AWG]	/		
耐电压	Dielectric Voltage-Withstand	1.6KV		

IEC 技术参数 IEC Technical Data				
过电压类别	Surge voltage category	Ⅲ	Ⅲ	Ⅱ
污染等级	Contamination Class	3	2	2
额定电压	Rated Voltage [V]	150	150	250
额定电流	Rated Current [A]	8	8	8
额定冲击电压	Impulse withstand voltage [KV]	2.5	2.5	2.5
导线截面积 Conductor cross section	硬质导线 Solid[mm²]	/		
	柔性导线 Flexible[mm²]	/		

材料 Material		
绝缘材料	Insulation Material	PBT
阻燃等级	Inflammability Class	UL94V-0
导体材料	Conductor Material	Copper alloy
导体表面镀层	Conductor Plating	Sn plated

一般参数 Other Data		
间距/极数	Pitch/Poles [mm]/[P]	3.5/3*2-3*24
剥线长度	Stripping Length [mm]	/
螺丝/扭矩	Screw/Torque(Max)[N.m]	/
工作温度	Operating temperature[℃]	-30~+120
焊锡温度	Soldering temperature	260℃/5S
引针尺寸	Pin dimensions [mm]	0.8*0.8
PCB板孔径	PCB Hole Diameter [mm]	∅1.4

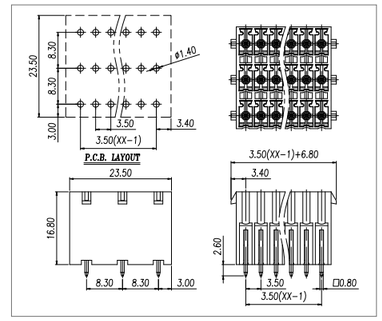



Pitch:3.5mm

WJ15EDGVH3M-3.5

UL/CUL 技术参数 UL/CUL Technical Data				
等级	Use Group	B	C	D
额定电压	Rated Voltage [V]	300	-	-
额定电流	Rated Current [A]	8	-	-
接线范围 Wire Range	单芯线 Solid [AWG]	/		
	多芯线 Stranded [AWG]	/		
耐电压	Dielectric Voltage-Withstand	1.6KV		

IEC 技术参数 IEC Technical Data				
过电压类别	Surge voltage category	Ⅲ	Ⅲ	Ⅱ
污染等级	Contamination Class	3	2	2
额定电压	Rated Voltage [V]	150	150	250
额定电流	Rated Current [A]	8	8	8
额定冲击电压	Impulse withstand voltage [KV]	2.5	2.5	2.5
导线截面积 Conductor cross section	硬质导线 Solid[mm²]	/		
	柔性导线 Flexible[mm²]	/		

材料 Material		
绝缘材料	Insulation Material	PBT
阻燃等级	Inflammability Class	UL94V-0
导体材料	Conductor Material	Copper alloy
导体表面镀层	Conductor Plating	Sn plated

一般参数 Other Data		
间距/极数	Pitch/Poles [mm]/[P]	3.5/3*2-3*24
剥线长度	Stripping Length [mm]	/
螺丝/扭矩	Screw/Torque(Max)[N.m]	/
工作温度	Operating temperature[℃]	-30~+120
焊锡温度	Soldering temperature	260℃/5S
引针尺寸	Pin dimensions [mm]	0.8*0.8
PCB板孔径	PCB Hole Diameter [mm]	∅1.4

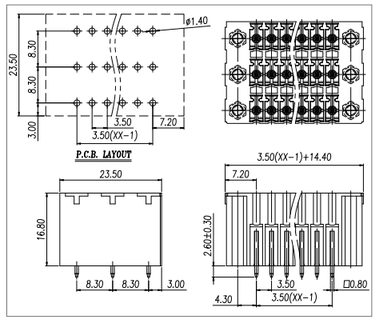



Pitch:3.5mm

WJ15EDGRH3C-3.5

UL/CUL 技术参数 UL/CUL Technical Data				
等级	Use Group	B	C	D
额定电压	Rated Voltage [V]	300	-	-
额定电流	Rated Current [A]	8	-	-
接线范围 Wire Range	单芯线 Solid [AWG]	/		
	多芯线 Stranded [AWG]	/		
耐电压	Dielectric Voltage-Withstand	1.6KV		

IEC 技术参数 IEC Technical Data				
过电压类别	Surge voltage category	Ⅲ	Ⅲ	Ⅱ
污染等级	Contamination Class	3	2	2
额定电压	Rated Voltage [V]	150	150	250
额定电流	Rated Current [A]	8	8	8
额定冲击电压	Impulse withstand voltage [KV]	2.5	2.5	2.5
导线截面积 Conductor cross section	硬质导线 Solid[mm²]	/		
	柔性导线 Flexible[mm²]	/		

材料 Material		
绝缘材料	Insulation Material	PBT
阻燃等级	Inflammability Class	UL94V-0
导体材料	Conductor Material	Copper alloy
导体表面镀层	Conductor Plating	Sn plated

一般参数 Other Data		
间距/极数	Pitch/Poles [mm]/[P]	3.5/3*2-3*24
剥线长度	Stripping Length [mm]	/
螺丝/扭矩	Screw/Torque(Max)[N.m]	/
工作温度	Operating temperature[℃]	-30~+120
焊锡温度	Soldering temperature	260℃/5S
引针尺寸	Pin dimensions [mm]	0.8*0.8
PCB板孔径	PCB Hole Diameter [mm]	∅1.4

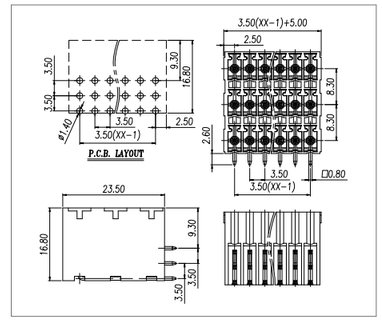

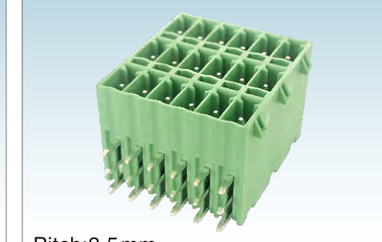

Pitch:3.5mm

WJ15EDGRH3N-3.5

UL/CUL 技术参数 UL/CUL Technical Data				
等级	Use Group	B	C	D
额定电压	Rated Voltage [V]	300	-	-
额定电流	Rated Current [A]	8	-	-
接线范围 Wire Range	单芯线 Solid [AWG]	/		
	多芯线 Stranded [AWG]	/		
耐电压	Dielectric Voltage-Withstand	1.6KV		

IEC 技术参数 IEC Technical Data				
过电压类别	Surge voltage category	Ⅲ	Ⅲ	Ⅱ
污染等级	Contamination Class	3	2	2
额定电压	Rated Voltage [V]	150	150	250
额定电流	Rated Current [A]	8	8	8
额定冲击电压	Impulse withstand voltage [KV]	2.5	2.5	2.5
导线截面积 Conductor cross section	硬质导线 Solid[mm²]	/		
	柔性导线 Flexible[mm²]	/		

材料 Material		
绝缘材料	Insulation Material	PBT
阻燃等级	Inflammability Class	UL94V-0
导体材料	Conductor Material	Copper alloy
导体表面镀层	Conductor Plating	Sn plated

一般参数 Other Data		
间距/极数	Pitch/Poles [mm]/[P]	3.5/3*2-3*24
剥线长度	Stripping Length [mm]	/
螺丝/扭矩	Screw/Torque(Max)[N.m]	/
工作温度	Operating temperature[℃]	-30~+120
焊锡温度	Soldering temperature	260℃/5S
引针尺寸	Pin dimensions [mm]	0.8*0.8
PCB板孔径	PCB Hole Diameter [mm]	∅1.4

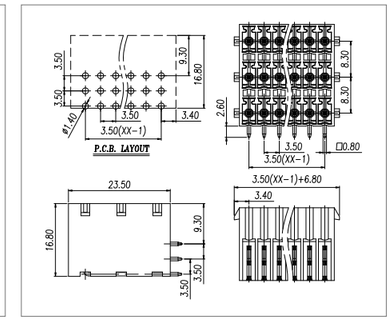



Pitch:3.5mm

WJ15EDGRH3M-3.5

UL/CUL 技术参数 UL/CUL Technical Data				
等级	Use Group	B	C	D
额定电压	Rated Voltage [V]	300	-	-
额定电流	Rated Current [A]	8	-	-
接线范围 Wire Range	单芯线 Solid [AWG]	/		
	多芯线 Stranded [AWG]	/		
耐电压	Dielectric Voltage-Withstand	1.6KV		

IEC 技术参数 IEC Technical Data				
过电压类别	Surge voltage category	Ⅲ	Ⅲ	Ⅱ
污染等级	Contamination Class	3	2	2
额定电压	Rated Voltage [V]	150	150	250
额定电流	Rated Current [A]	8	8	8
额定冲击电压	Impulse withstand voltage [KV]	2.5	2.5	2.5
导线截面积 Conductor cross section	硬质导线 Solid[mm²]	/		
	柔性导线 Flexible[mm²]	/		

材料 Material		
绝缘材料	Insulation Material	PBT
阻燃等级	Inflammability Class	UL94V-0
导体材料	Conductor Material	Copper alloy
导体表面镀层	Conductor Plating	Sn plated

一般参数 Other Data		
间距/极数	Pitch/Poles [mm]/[P]	3.5/3*2-3*24
剥线长度	Stripping Length [mm]	/
螺丝/扭矩	Screw/Torque(Max)[N.m]	/
工作温度	Operating temperature[℃]	-30~+120
焊锡温度	Soldering temperature	260℃/5S
引针尺寸	Pin dimensions [mm]	0.8*0.8
PCB板孔径	PCB Hole Diameter [mm]	∅1.4

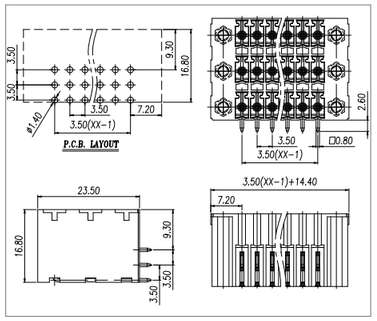



Pitch:3.5mm

WJ15EDGVH3C-THT-3.5

UL/CUL 技术参数 UL/CUL Technical Data				
等级	Use Group	B	C	D
额定电压	Rated Voltage [V]	300	-	-
额定电流	Rated Current [A]	8	-	-
接线范围 Wire Range	单芯线 Solid [AWG]	/		
	多芯线 Stranded [AWG]	/		
耐电压	Dielectric Voltage-Withstand	1.6KV		

IEC 技术参数 IEC Technical Data				
过电压类别	Surge voltage category	Ⅲ	Ⅲ	Ⅱ
污染等级	Contamination Class	3	2	2
额定电压	Rated Voltage [V]	150	150	250
额定电流	Rated Current [A]	8	8	8
额定冲击电压	Impulse withstand voltage [KV]	2.5	2.5	2.5
导线截面积 Conductor cross section	硬质导线 Solid[mm²]	/		
	柔性导线 Flexible[mm²]	/		

材料 Material		
绝缘材料	Insulation Material	LCP
阻燃等级	Inflammability Class	UL94V-0
导体材料	Conductor Material	Copper alloy
导体表面镀层	Conductor Plating	Sn plated

一般参数 Other Data		
间距/极数	Pitch/Poles [mm]/[P]	3.5/3*2-3*24
剥线长度	Stripping Length [mm]	/
螺丝/扭矩	Screw/Torque(Max)[N.m]	/
工作温度	Operating temperature[℃]	-40~+130
焊锡温度	Soldering temperature	285℃/10S
引针尺寸	Pin dimensions [mm]	0.8*0.8
PCB板孔径	PCB Hole Diameter [mm]	∅1.4

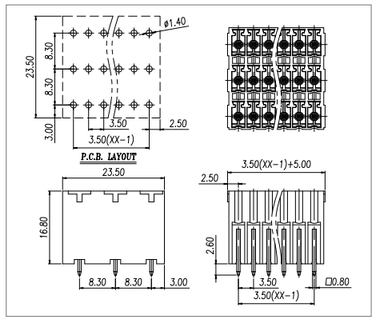

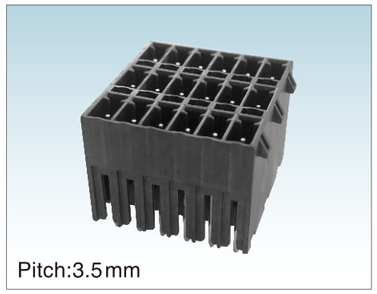

Pitch:3.5mm

WJ15EDGVH3N-THT-3.5

UL/CUL 技术参数 UL/CUL Technical Data				
等级	Use Group	B	C	D
额定电压	Rated Voltage [V]	300	-	-
额定电流	Rated Current [A]	8	-	-
接线范围 Wire Range	单芯线 Solid [AWG]	/		
	多芯线 Stranded [AWG]	/		
耐电压	Dielectric Voltage-Withstand	1.6KV		

IEC 技术参数 IEC Technical Data				
过电压类别	Surge voltage category	Ⅲ	Ⅲ	Ⅱ
污染等级	Contamination Class	3	2	2
额定电压	Rated Voltage [V]	150	150	250
额定电流	Rated Current [A]	8	8	8
额定冲击电压	Impulse withstand voltage [KV]	2.5	2.5	2.5
导线截面积 Conductor cross section	硬质导线 Solid[mm²]	/		
	柔性导线 Flexible[mm²]	/		

材料 Material		
绝缘材料	Insulation Material	LCP
阻燃等级	Inflammability Class	UL94V-0
导体材料	Conductor Material	Copper alloy
导体表面镀层	Conductor Plating	Sn plated

一般参数 Other Data		
间距/极数	Pitch/Poles [mm]/[P]	3.5/3*2-3*24
剥线长度	Stripping Length [mm]	/
螺丝/扭矩	Screw/Torque(Max)[N.m]	/
工作温度	Operating temperature[℃]	-40~+130
焊锡温度	Soldering temperature	285℃/10S
引针尺寸	Pin dimensions [mm]	0.8*0.8
PCB板孔径	PCB Hole Diameter [mm]	∅1.4



Pitch:3.5mm

WJ15EDGVH3M-THT-3.5

UL/CUL 技术参数 UL/CUL Technical Data				
等级	Use Group	B	C	D
额定电压	Rated Voltage [V]	300	-	-
额定电流	Rated Current [A]	8	-	-
接线范围 Wire Range	单芯线 Solid [AWG]	/		
	多芯线 Stranded [AWG]	/		
耐电压	Dielectric Voltage-Withstand	1.6KV		

IEC 技术参数 IEC Technical Data				
过电压类别	Surge voltage category	Ⅲ	Ⅲ	Ⅱ
污染等级	Contamination Class	3	2	2
额定电压	Rated Voltage [V]	150	150	250
额定电流	Rated Current [A]	8	8	8
额定冲击电压	Impulse withstand voltage [KV]	2.5	2.5	2.5
导线截面积 Conductor cross section	硬质导线 Solid[mm²]	/		
	柔性导线 Flexible[mm²]	/		

材料 Material		
绝缘材料	Insulation Material	LCP
阻燃等级	Inflammability Class	UL94V-0
导体材料	Conductor Material	Copper alloy
导体表面镀层	Conductor Plating	Sn plated

一般参数 Other Data		
间距/极数	Pitch/Poles [mm]/[P]	3.5/3*2-3*24
剥线长度	Stripping Length [mm]	/
螺丝/扭矩	Screw/Torque(Max)[N.m]	/
工作温度	Operating temperature[℃]	-40~+130
焊锡温度	Soldering temperature	285℃/10S
引针尺寸	Pin dimensions [mm]	0.8*0.8
PCB板孔径	PCB Hole Diameter [mm]	∅1.4

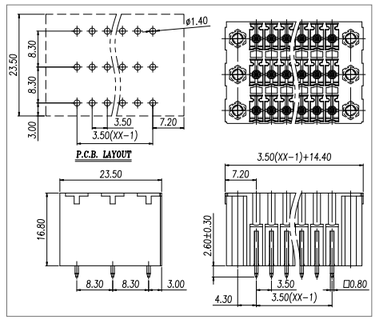

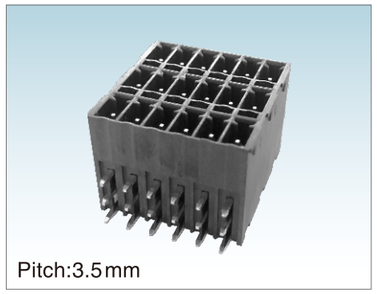

Pitch:3.5mm

WJ15EDGRH3C-THT-3.5

UL/CUL 技术参数 UL/CUL Technical Data				
等级	Use Group	B	C	D
额定电压	Rated Voltage [V]	300	-	-
额定电流	Rated Current [A]	8	-	-
接线范围 Wire Range	单芯线 Solid [AWG]	/		
	多芯线 Stranded [AWG]	/		
耐电压	Dielectric Voltage-Withstand	1.6KV		

IEC 技术参数 IEC Technical Data				
过电压类别	Surge voltage category	Ⅲ	Ⅲ	Ⅱ
污染等级	Contamination Class	3	2	2
额定电压	Rated Voltage [V]	150	150	250
额定电流	Rated Current [A]	8	8	8
额定冲击电压	Impulse withstand voltage [KV]	2.5	2.5	2.5
导线截面积 Conductor cross section	硬质导线 Solid[mm²]	/		
	柔性导线 Flexible[mm²]	/		

材料 Material		
绝缘材料	Insulation Material	LCP
阻燃等级	Inflammability Class	UL94V-0
导体材料	Conductor Material	Copper alloy
导体表面镀层	Conductor Plating	Sn plated

一般参数 Other Data		
间距/极数	Pitch/Poles [mm]/[P]	3.5/3*2-3*24
剥线长度	Stripping Length [mm]	/
螺丝/扭矩	Screw/Torque(Max)[N.m]	/
工作温度	Operating temperature[℃]	-40~+130
焊锡温度	Soldering temperature	285℃/10S
引针尺寸	Pin dimensions [mm]	0.8*0.8
PCB板孔径	PCB Hole Diameter [mm]	∅1.4

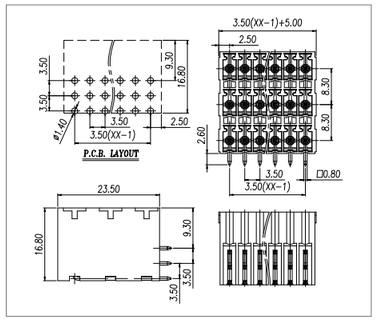

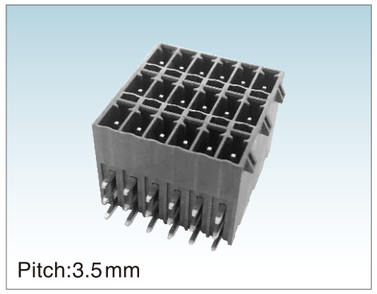

Pitch:3.5mm

WJ15EDGRH3N-THT-3.5

UL/CUL 技术参数 UL/CUL Technical Data				
等级	Use Group	B	C	D
额定电压	Rated Voltage [V]	300	-	-
额定电流	Rated Current [A]	8	-	-
接线范围 Wire Range	单芯线 Solid [AWG]	/		
	多芯线 Stranded [AWG]	/		
耐电压	Dielectric Voltage-Withstand	1.6KV		

IEC 技术参数 IEC Technical Data				
过电压类别	Surge voltage category	Ⅲ	Ⅲ	Ⅱ
污染等级	Contamination Class	3	2	2
额定电压	Rated Voltage [V]	150	150	250
额定电流	Rated Current [A]	8	8	8
额定冲击电压	Impulse withstand voltage [KV]	2.5	2.5	2.5
导线截面积 Conductor cross section	硬质导线 Solid[mm²]	/		
	柔性导线 Flexible[mm²]	/		

材料 Material		
绝缘材料	Insulation Material	LCP
阻燃等级	Inflammability Class	UL94V-0
导体材料	Conductor Material	Copper alloy
导体表面镀层	Conductor Plating	Sn plated

一般参数 Other Data		
间距/极数	Pitch/Poles [mm]/[P]	3.5/3*2-3*24
剥线长度	Stripping Length [mm]	/
螺丝/扭矩	Screw/Torque(Max)[N.m]	/
工作温度	Operating temperature[℃]	-40~+130
焊锡温度	Soldering temperature	285℃/10S
引针尺寸	Pin dimensions [mm]	0.8*0.8
PCB板孔径	PCB Hole Diameter [mm]	∅1.4

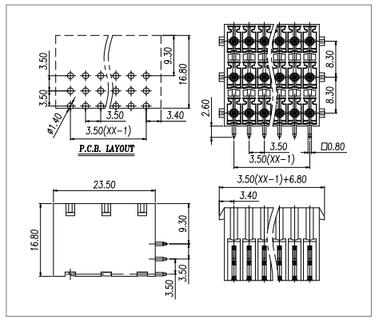



Pitch:3.5mm

WJ15EDGRH3M-THT-3.5

UL/CUL 技术参数 UL/CUL Technical Data				
等级	Use Group	B	C	D
额定电压	Rated Voltage [V]	300	-	-
额定电流	Rated Current [A]	8	-	-
接线范围 Wire Range	单芯线 Solid [AWG]	/		
	多芯线 Stranded [AWG]	/		
耐电压	Dielectric Voltage-Withstand	1.6KV		

IEC 技术参数 IEC Technical Data				
过电压类别	Surge voltage category	Ⅲ	Ⅲ	Ⅱ
污染等级	Contamination Class	3	2	2
额定电压	Rated Voltage [V]	150	150	250
额定电流	Rated Current [A]	8	8	8
额定冲击电压	Impulse withstand voltage [KV]	2.5	2.5	2.5
导线截面积 Conductor cross section	硬质导线 Solid[mm²]	/		
	柔性导线 Flexible[mm²]	/		

材料 Material		
绝缘材料	Insulation Material	LCP
阻燃等级	Inflammability Class	UL94V-0
导体材料	Conductor Material	Copper alloy
导体表面镀层	Conductor Plating	Sn plated

一般参数 Other Data		
间距/极数	Pitch/Poles [mm]/[P]	3.5/3*2-3*24
剥线长度	Stripping Length [mm]	/
螺丝/扭矩	Screw/Torque(Max)[N.m]	/
工作温度	Operating temperature[℃]	-40~+130
焊锡温度	Soldering temperature	285℃/10S
引针尺寸	Pin dimensions [mm]	0.8×0.8
PCB板孔径	PCB Hole Diameter [mm]	∅1.4

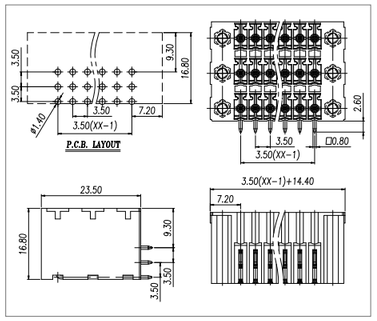



Pitch:5.0/5.08mm

WJ2EDGK-5.0/5.08

UL/CUL 技术参数 UL/CUL Technical Data				
等级	Use Group	B	C	D
额定电压	Rated Voltage [V]	300	-	300
额定电流	Rated Current [A]	15	-	10
接线范围 Wire Range	单芯线 Solid [AWG]	28~12		
	多芯线 Stranded [AWG]	28~12		
耐电压	Dielectric Voltage-Withstand	1.6KV		

IEC 技术参数 IEC Technical Data				
过电压类别	Overvoltage Category	Ⅲ	Ⅲ	Ⅱ
污染等级	Contamination Class	3	2	2
额定电压	Rated Voltage [V]	250	320	630
额定电流	Rated Current [A]	15	15	15
额定冲击电压	Impulse withstand voltage [KV]	4	4	4
导线截面积 Conductor cross section	硬质导线 Solid[mm²]	0.2~2.5		
	柔性导线 Flexible[mm²]	0.2~2.5		

材料 Material		
绝缘材料	Insulation Material	PA66
阻燃等级	Flame retardant rating	UL94V-0
导体材料	Conductor Material	Copper alloy
导体表面镀层	Plating of conductor surface	Ni plated

一般参数 Other Data		
间距/极数	Pitch/Poles [mm]/[P]	5.0,5.08/2~24
剥线长度	Stripping Length [mm]	7-8
螺丝/扭矩	Screw/Torque(Max)[N.m]	M3/0.5
工作温度	Operating temperature[℃]	-40~+105
焊锡温度	Soldering temperature	/
引针尺寸	Pin dimensions [mm]	/
PCB板孔径	PCB Hole Diameter [mm]	/

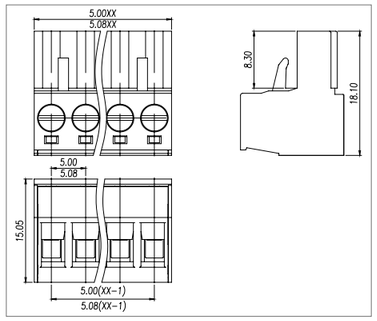

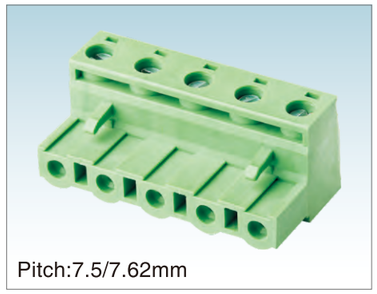

Pitch:7.5/7.62mm

WJ2EDGK-7.5/7.62

UL/CUL 技术参数 UL/CUL Technical Data				
等级	Use Group	B	C	D
额定电压	Rated Voltage [V]	300	-	300
额定电流	Rated Current [A]	15	-	10
接线范围 Wire Range	单芯线 Solid [AWG]	28~12		
	多芯线 Stranded [AWG]	28~12		
耐电压	Dielectric Voltage-Withstand	1.6KV		

IEC 技术参数 IEC Technical Data				
过电压类别	Overvoltage Category	Ⅲ	Ⅲ	Ⅱ
污染等级	Contamination Class	3	2	2
额定电压	Rated Voltage [V]	400	630	1000
额定电流	Rated Current [A]	15	15	15
额定冲击电压	Impulse withstand voltage [KV]	6	6	6
导线截面积 Conductor cross section	硬质导线 Solid[mm²]	0.2~2.5		
	柔性导线 Flexible[mm²]	0.2~2.5		

材料 Material		
绝缘材料	Insulation Material	PA66
阻燃等级	Flame retardant rating	UL94V-0
导体材料	Conductor Material	Copper alloy
导体表面镀层	Plating of conductor surface	Ni plated

一般参数 Other Data		
间距/极数	Pitch/Poles [mm]/[P]	7.5,7.62/2~24
剥线长度	Stripping Length [mm]	7~8
螺丝/扭矩	Screw/Torque(Max)[N.m]	M3/0.5
工作温度	Operating temperature[℃]	-40~+105
焊锡温度	Soldering temperature	/
引针尺寸	Pin dimensions [mm]	/
PCB板孔径	PCB Hole Diameter [mm]	/

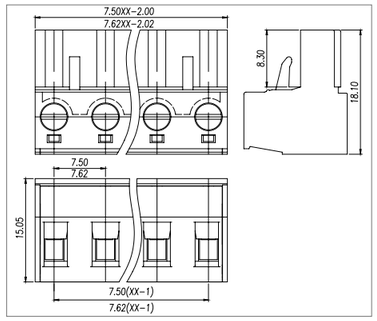



Pitch:10.0/10.16mm

WJ2EDGK-10.0/10.16

UL/CUL 技术参数 UL/CUL Technical Data				
等级	Use Group	B	C	D
额定电压	Rated Voltage [V]	600	-	600
额定电流	Rated Current [A]	15	-	5
接线范围 Wire Range	单芯线 Solid [AWG]	28~12		
	多芯线 Stranded [AWG]	28~12		
耐电压	Dielectric Voltage-Withstand	2.2KV		

IEC 技术参数 IEC Technical Data				
过电压类别	Overvoltage Category	Ⅲ	Ⅲ	Ⅱ
污染等级	Contamination Class	3	2	2
额定电压	Rated Voltage [V]	630	1000	1000
额定电流	Rated Current [A]	10	10	10
额定冲击电压	Impulse withstand voltage [KV]	6	6	6
导线截面积 Conductor cross section	硬质导线 Solid[mm²]	0.5~2.5		
	柔性导线 Flexible[mm²]	0.5~2.5		

材料 Material		
绝缘材料	Insulation Material	PA66
阻燃等级	Flame retardant rating	UL94V-0
导体材料	Conductor Material	Copper alloy
导体表面镀层	Plating of conductor surface	Ni plated

一般参数 Other Data		
间距/极数	Pitch/Poles [mm]/[P]	10,10.16/2~12
剥线长度	Stripping Length [mm]	7-8
螺丝/扭矩	Screw/Torque(Max)[N.m]	M3/0.5
工作温度	Operating temperature[℃]	-40~+105
焊锡温度	Soldering temperature	/
引针尺寸	Pin dimensions [mm]	/
PCB板孔径	PCB Hole Diameter [mm]	/

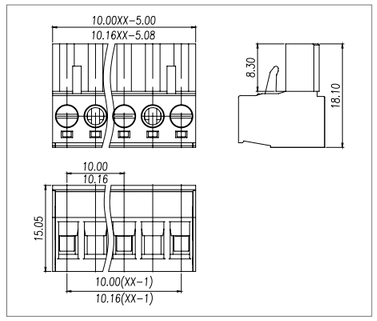

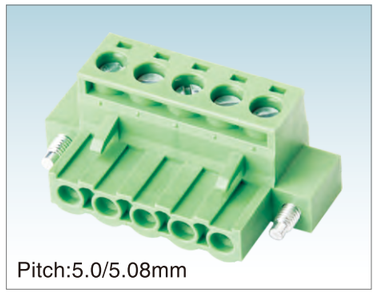

Pitch:5.0/5.08mm

WJ2EDGKM-5.0/5.08

UL/CUL 技术参数 UL/CUL Technical Data				
等级	Use Group	B	C	D
额定电压	Rated Voltage [V]	300	-	300
额定电流	Rated Current [A]	15	-	10
接线范围 Wire Range	单芯线 Solid [AWG]	28~12		
	多芯线 Stranded [AWG]	28~12		
耐电压	Dielectric Voltage-Withstand	1.6KV		

IEC 技术参数 IEC Technical Data				
过电压类别	Overvoltage Category	Ⅲ	Ⅲ	Ⅱ
污染等级	Contamination Class	3	2	2
额定电压	Rated Voltage [V]	250	320	630
额定电流	Rated Current [A]	15	15	15
额定冲击电压	Impulse withstand voltage [KV]	4	4	4
导线截面积 Conductor cross section	硬质导线 Solid[mm²]	0.2~2.5		
	柔性导线 Flexible[mm²]	0.2~2.5		

材料 Material		
绝缘材料	Insulation Material	PA66
阻燃等级	Flame retardant rating	UL94V-0
导体材料	Conductor Material	Copper alloy
导体表面镀层	Plating of conductor surface	Ni plated

一般参数 Other Data		
间距/极数	Pitch/Poles [mm]/[P]	5.0,5.08/2~24
剥线长度	Stripping Length [mm]	7~8
螺丝/扭矩	Screw/Torque(Max)[N.m]	M3/0.5
工作温度	Operating temperature[℃]	-40~+105
焊锡温度	Soldering temperature	/
引针尺寸	Pin dimensions [mm]	/
PCB板孔径	PCB Hole Diameter [mm]	/

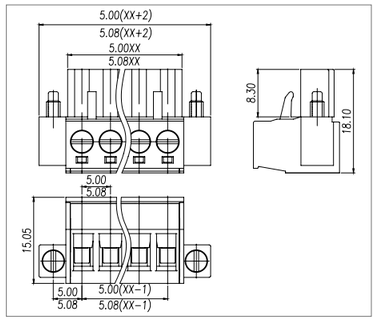



Pitch:7.5/7.62mm

WJ2EDGKM-7.5/7.62

UL/CUL 技术参数 UL/CUL Technical Data				
等级	Use Group	B	C	D
额定电压	Rated Voltage [V]	300	-	300
额定电流	Rated Current [A]	15	-	10
接线范围 Wire Range	单芯线 Solid [AWG]	28~12		
	多芯线 Stranded [AWG]	28~12		
耐电压	Dielectric Voltage-Withstand	1.6KV		

IEC 技术参数 IEC Technical Data				
过电压类别	Overvoltage Category	Ⅲ	Ⅲ	Ⅱ
污染等级	Contamination Class	3	2	2
额定电压	Rated Voltage [V]	400	630	1000
额定电流	Rated Current [A]	15	15	15
额定冲击电压	Impulse withstand voltage [KV]	6	6	6
导线截面积 Conductor cross section	硬质导线 Solid[mm²]	0.2~2.5		
	柔性导线 Flexible[mm²]	0.2~2.5		

材料 Material		
绝缘材料	Insulation Material	PA66
阻燃等级	Flame retardant rating	UL94V-0
导体材料	Conductor Material	Copper alloy
导体表面镀层	Plating of conductor surface	Ni plated

一般参数 Other Data		
间距/极数	Pitch/Poles [mm]/[P]	7.5,7.62/2~24
剥线长度	Stripping Length [mm]	7~8
螺丝/扭矩	Screw/Torque(Max)[N.m]	M3/0.5
工作温度	Operating temperature[℃]	-40~+105
焊锡温度	Soldering temperature	/
引针尺寸	Pin dimensions [mm]	/
PCB板孔径	PCB Hole Diameter [mm]	/

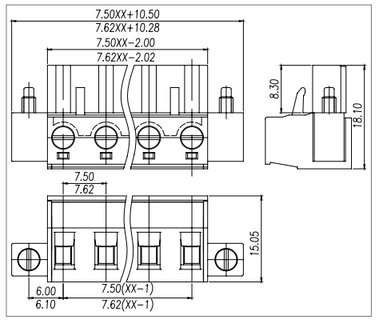



Pitch:10.0/10.16mm

WJ2EDGKM-10.0/10.16

UL/CUL 技术参数 UL/CUL Technical Data				
等级	Use Group	B	C	D
额定电压	Rated Voltage [V]	600	-	600
额定电流	Rated Current [A]	15	-	5
接线范围 Wire Range	单芯线 Solid [AWG]	28~12		
	多芯线 Stranded [AWG]	28~12		
耐电压	Dielectric Voltage-Withstand	2.2KV		

IEC 技术参数 IEC Technical Data				
过电压类别	Overvoltage Category	Ⅲ	Ⅲ	Ⅱ
污染等级	Contamination Class	3	2	2
额定电压	Rated Voltage [V]	630	1000	1000
额定电流	Rated Current [A]	10	10	10
额定冲击电压	Impulse withstand voltage [KV]	6	6	6
导线截面积 Conductor cross section	硬质导线 Solid[mm²]	0.5~2.5		
	柔性导线 Flexible[mm²]	0.5~2.5		

材料 Material		
绝缘材料	Insulation Material	PA66
阻燃等级	Flame retardant rating	UL94V-0
导体材料	Conductor Material	Copper alloy
导体表面镀层	Plating of conductor surface	Ni plated

一般参数 Other Data		
间距/极数	Pitch/Poles [mm]/[P]	10,10.16/2~12
剥线长度	Stripping Length [mm]	7~8
螺丝/扭矩	Screw/Torque(Max)[N.m]	M3/0.5
工作温度	Operating temperature[℃]	-40~+105
焊锡温度	Soldering temperature	/
引针尺寸	Pin dimensions [mm]	/
PCB板孔径	PCB Hole Diameter [mm]	/

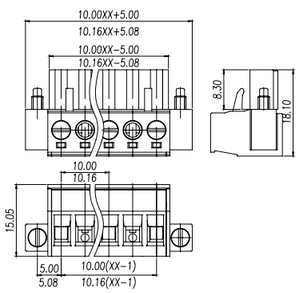



Pitch:5.08mm

WJ2EDGKH-5.08

UL/CUL 技术参数 UL/CUL Technical Data				
等级	Use Group	B	C	D
额定电压	Rated Voltage [V]	300	-	300
额定电流	Rated Current [A]	15	-	10
接线范围 Wire Range	单芯线 Solid [AWG]	28~12		
	多芯线 Stranded [AWG]	28~12		
耐电压	Dielectric Voltage-Withstand	1.6KV		

IEC 技术参数 IEC Technical Data				
过电压类别	Overvoltage Category	Ⅲ	Ⅲ	Ⅱ
污染等级	Contamination Class	3	2	2
额定电压	Rated Voltage [V]	250	320	630
额定电流	Rated Current [A]	12	12	12
额定冲击电压	Impulse withstand voltage [KV]	4	4	4
导线截面积 Conductor cross section	硬质导线 Solid[mm²]	0.2~2.5		
	柔性导线 Flexible[mm²]	0.2~2.5		

材料 Material		
绝缘材料	Insulation Material	PA66
阻燃等级	Flame retardant rating	UL94V-0
导体材料	Conductor Material	Copper alloy
导体表面镀层	Plating of conductor surface	Sn plated

一般参数 Other Data		
间距/极数	Pitch/Poles [mm]/[P]	5.08/2~24
剥线长度	Stripping Length [mm]	7-8
螺丝/扭矩	Screw/Torque(Max)[N.m]	M3/0.5
工作温度	Operating temperature[℃]	-40~+105
焊锡温度	Soldering temperature	/
引针尺寸	Pin dimensions [mm]	/
PCB板孔径	PCB Hole Diameter [mm]	/

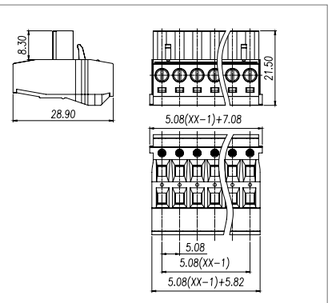



Pitch:5.08mm

WJ2EDGKHM-5.08

UL/CUL 技术参数 UL/CUL Technical Data				
等级	Use Group	B	C	D
额定电压	Rated Voltage [V]	300	-	300
额定电流	Rated Current [A]	15	-	10
接线范围 Wire Range	单芯线 Solid [AWG]	28~12		
	多芯线 Stranded [AWG]	28~12		
耐电压	Dielectric Voltage-Withstand	1.6KV		

IEC 技术参数 IEC Technical Data				
过电压类别	Overvoltage Category	Ⅲ	Ⅲ	Ⅱ
污染等级	Contamination Class	3	2	2
额定电压	Rated Voltage [V]	250	320	630
额定电流	Rated Current [A]	12	12	12
额定冲击电压	Impulse withstand voltage [KV]	4	4	4
导线截面积 Conductor cross section	硬质导线 Solid[mm²]	0.2~2.5		
	柔性导线 Flexible[mm²]	0.2~2.5		

材料 Material		
绝缘材料	Insulation Material	PA66
阻燃等级	Flame retardant rating	UL94V-0
导体材料	Conductor Material	Copper alloy
导体表面镀层	Plating of conductor surface	Sn plated

一般参数 Other Data		
间距/极数	Pitch/Poles [mm]/[P]	5.08/2~24
剥线长度	Stripping Length [mm]	7-8
螺丝/扭矩	Screw/Torque(Max)[N.m]	M3/0.5
工作温度	Operating temperature[℃]	-40~+105
焊锡温度	Soldering temperature	/
引针尺寸	Pin dimensions [mm]	/
PCB板孔径	PCB Hole Diameter [mm]	/

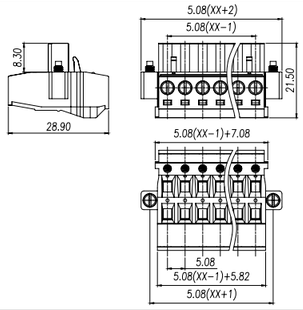

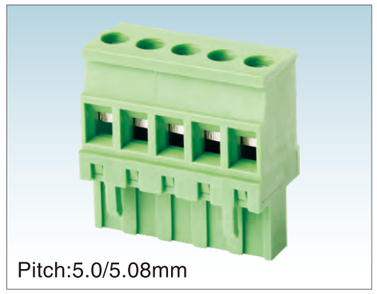

Pitch:5.0/5.08mm

WJ2EDGKA-5.0/5.08

UL/CUL 技术参数 UL/CUL Technical Data				
等级	Use Group	B	C	D
额定电压	Rated Voltage [V]	300	-	300
额定电流	Rated Current [A]	15	-	10
接线范围 Wire Range	单芯线 Solid [AWG]	28~12		
	多芯线 Stranded [AWG]	28~12		
耐电压	Dielectric Voltage-Withstand	1.6KV		

IEC 技术参数 IEC Technical Data				
过电压类别	Overvoltage Category	Ⅲ	Ⅲ	Ⅱ
污染等级	Contamination Class	3	2	2
额定电压	Rated Voltage [V]	250	320	630
额定电流	Rated Current [A]	12	12	12
额定冲击电压	Impulse withstand voltage [KV]	4	4	4
导线截面积 Conductor cross section	硬质导线 Solid[mm²]	0.2~2.5		
	柔性导线 Flexible[mm²]	0.2~2.5		

材料 Material		
绝缘材料	Insulation Material	PA66
阻燃等级	Flame retardant rating	UL94V-0
导体材料	Conductor Material	Copper alloy
导体表面镀层	Plating of conductor surface	Sn plated

一般参数 Other Data		
间距/极数	Pitch/Poles [mm]/[P]	5.0,5.08/2~24
剥线长度	Stripping Length [mm]	7~8mm
螺丝/扭矩	Screw/Torque(Max)[N.m]	M3/0.5
工作温度	Operating temperature[℃]	-40~+105
焊锡温度	Soldering temperature	/
引针尺寸	Pin dimensions [mm]	/
PCB板孔径	PCB Hole Diameter [mm]	/

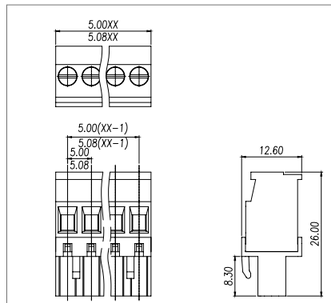

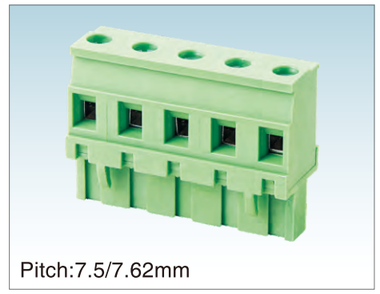

Pitch:7.5/7.62mm

WJ2EDGKA-7.5/7.62

UL/CUL 技术参数 UL/CUL Technical Data				
等级	Use Group	B	C	D
额定电压	Rated Voltage [V]	300	-	300
额定电流	Rated Current [A]	15	-	10
接线范围 Wire Range	单芯线 Solid [AWG]	28~12		
	多芯线 Stranded [AWG]	28~12		
耐电压	Dielectric Voltage-Withstand	1.6KV		

IEC 技术参数 IEC Technical Data				
过电压类别	Overvoltage Category	Ⅲ	Ⅲ	Ⅱ
污染等级	Contamination Class	3	2	2
额定电压	Rated Voltage [V]	500	630	1000
额定电流	Rated Current [A]	12	12	12
额定冲击电压	Impulse withstand voltage [KV]	6	6	6
导线截面积 Conductor cross section	硬质导线 Solid[mm²]	0.2~2.5		
	柔性导线 Flexible[mm²]	0.2~2.5		

材料 Material		
绝缘材料	Insulation Material	PA66
阻燃等级	Flame retardant rating	UL94V-0
导体材料	Conductor Material	Copper alloy
导体表面镀层	Plating of conductor surface	Sn plated

一般参数 Other Data		
间距/极数	Pitch/Poles [mm]/[P]	7.5,7.62/2~24
剥线长度	Stripping Length [mm]	7~8mm
螺丝/扭矩	Screw/Torque(Max)[N.m]	M3/0.5
工作温度	Operating temperature[℃]	-40~+105
焊锡温度	Soldering temperature	/
引针尺寸	Pin dimensions [mm]	/
PCB板孔径	PCB Hole Diameter [mm]	/

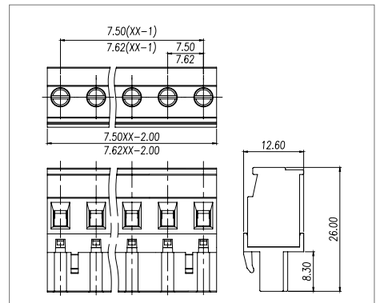

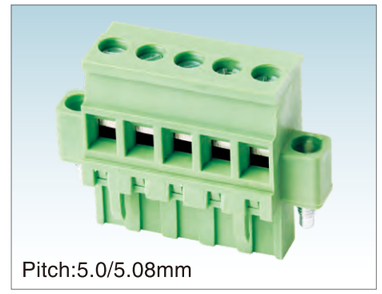

Pitch:5.0/5.08mm

WJ2EDGKAM-5.0/5.08

UL/CUL 技术参数 UL/CUL Technical Data				
等级	Use Group	B	C	D
额定电压	Rated Voltage [V]	300	-	300
额定电流	Rated Current [A]	15	-	10
接线范围 Wire Range	单芯线 Solid [AWG]	28~12		
	多芯线 Stranded [AWG]	28~12		
耐电压	Dielectric Voltage-Withstand	1.6KV		

IEC 技术参数 IEC Technical Data				
过电压类别	Overvoltage Category	Ⅲ	Ⅲ	Ⅱ
污染等级	Contamination Class	3	2	2
额定电压	Rated Voltage [V]	250	320	630
额定电流	Rated Current [A]	12	12	12
额定冲击电压	Impulse withstand voltage [KV]	4	4	4
导线截面积 Conductor cross section	硬质导线 Solid[mm²]	0.2~2.5		
	柔性导线 Flexible[mm²]	0.2~2.5		

材料 Material		
绝缘材料	Insulation Material	PA66
阻燃等级	Flame retardant rating	UL94V-0
导体材料	Conductor Material	Copper alloy
导体表面镀层	Plating of conductor surface	Sn plated

一般参数 Other Data		
间距/极数	Pitch/Poles [mm]/[P]	5.0,5.08/2~24
剥线长度	Stripping Length [mm]	7~8mm
螺丝/扭矩	Screw/Torque(Max)[N.m]	M3/0.5
工作温度	Operating temperature[℃]	-40~+105
焊锡温度	Soldering temperature	/
引针尺寸	Pin dimensions [mm]	/
PCB板孔径	PCB Hole Diameter [mm]	/

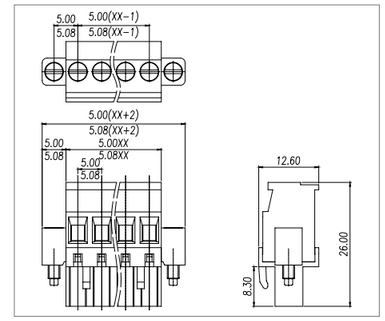



Pitch:7.5/7.62mm

WJ2EDGKAM-7.5/7.62

UL/CUL 技术参数 UL/CUL Technical Data				
等级	Use Group	B	C	D
额定电压	Rated Voltage [V]	300	-	300
额定电流	Rated Current [A]	15	-	10
接线范围 Wire Range	单芯线 Solid [AWG]	28~12		
	多芯线 Stranded [AWG]	28~12		
耐电压	Dielectric Voltage-Withstand	1.6KV		

IEC 技术参数 IEC Technical Data				
过电压类别	Overvoltage Category	Ⅲ	Ⅲ	Ⅱ
污染等级	Contamination Class	3	2	2
额定电压	Rated Voltage [V]	500	630	1000
额定电流	Rated Current [A]	12	12	12
额定冲击电压	Impulse withstand voltage [KV]	6	6	6
导线截面积 Conductor cross section	硬质导线 Solid[mm²]	0.2~2.5		
	柔性导线 Flexible[mm²]	0.2~2.5		

材料 Material		
绝缘材料	Insulation Material	PA66
阻燃等级	Flame retardant rating	UL94V-0
导体材料	Conductor Material	Copper alloy
导体表面镀层	Plating of conductor surface	Sn plated

一般参数 Other Data		
间距/极数	Pitch/Poles [mm]/[P]	7.5,7.62/2~24
剥线长度	Stripping Length [mm]	7~8
螺丝/扭矩	Screw/Torque(Max)[N.m]	M3/0.5
工作温度	Operating temperature[℃]	-40~+105
焊锡温度	Soldering temperature	/
引针尺寸	Pin dimensions [mm]	/
PCB板孔径	PCB Hole Diameter [mm]	/

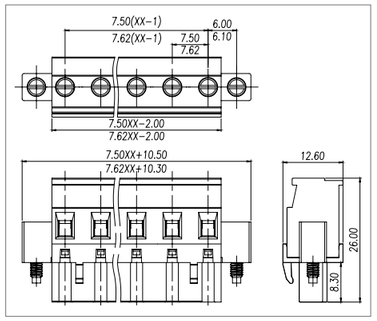



Pitch:5.0/5.08mm

WJ2EDGKB-5.0/5.08

UL/CUL 技术参数 UL/CUL Technical Data				
等级	Use Group	B	C	D
额定电压	Rated Voltage [V]	300	-	300
额定电流	Rated Current [A]	15	-	10
接线范围 Wire Range	单芯线 Solid [AWG]	28~12		
	多芯线 Stranded [AWG]	28~12		
耐电压	Dielectric Voltage-Withstand	1.6KV		

IEC 技术参数 IEC Technical Data				
过电压类别	Overvoltage Category	Ⅲ	Ⅲ	Ⅱ
污染等级	Contamination Class	3	2	2
额定电压	Rated Voltage [V]	250	320	630
额定电流	Rated Current [A]	12	12	12
额定冲击电压	Impulse withstand voltage [KV]	4	4	4
导线截面积 Conductor cross section	硬质导线 Solid[mm²]	0.2~2.5		
	柔性导线 Flexible[mm²]	0.2~2.5		

材料 Material		
绝缘材料	Insulation Material	PA66
阻燃等级	Flame retardant rating	UL94V-0
导体材料	Conductor Material	Copper alloy
导体表面镀层	Plating of conductor surface	Sn plated

一般参数 Other Data		
间距/极数	Pitch/Poles [mm]/[P]	5.0.5.08/2-24
剥线长度	Stripping Length [mm]	7-8
螺丝/扭矩	Screw/Torque(Max)[N.m]	M3/0.5
工作温度	Operating temperature[℃]	-40~+105
焊锡温度	Soldering temperature	/
引针尺寸	Pin dimensions [mm]	/
PCB板孔径	PCB Hole Diameter [mm]	/

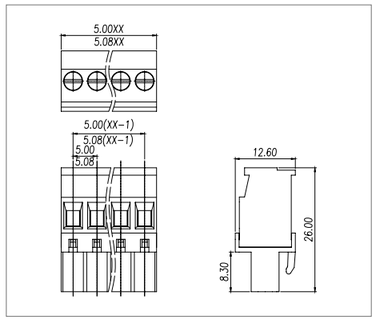



Pitch:7.5/7.62mm

WJ2EDGKB-7.5/7.62

UL/CUL 技术参数 UL/CUL Technical Data				
等级	Use Group	B	C	D
额定电压	Rated Voltage [V]	300	-	300
额定电流	Rated Current [A]	15	-	10
接线范围 Wire Range	单芯线 Solid [AWG]	28~12		
	多芯线 Stranded [AWG]	28~12		
耐电压	Dielectric Voltage-Withstand	1.6KV		

IEC 技术参数 IEC Technical Data				
过电压类别	Overvoltage Category	Ⅲ	Ⅲ	Ⅱ
污染等级	Contamination Class	3	2	2
额定电压	Rated Voltage [V]	500	630	1000
额定电流	Rated Current [A]	12	12	12
额定冲击电压	Impulse withstand voltage [KV]	6	6	6
导线截面积 Conductor cross section	硬质导线 Solid[mm²]	0.2~2.5		
	柔性导线 Flexible[mm²]	0.2~2.5		

材料 Material		
绝缘材料	Insulation Material	PA66
阻燃等级	Flame retardant rating	UL94V-0
导体材料	Conductor Material	Copper alloy
导体表面镀层	Plating of conductor surface	Sn plated

一般参数 Other Data		
间距/极数	Pitch/Poles [mm]/[P]	7.5,7.62/2~24
剥线长度	Stripping Length [mm]	7~8
螺丝/扭矩	Screw/Torque(Max)[N.m]	M3/0.5
工作温度	Operating temperature[℃]	-40~+105
焊锡温度	Soldering temperature	/
引针尺寸	Pin dimensions [mm]	/
PCB板孔径	PCB Hole Diameter [mm]	/

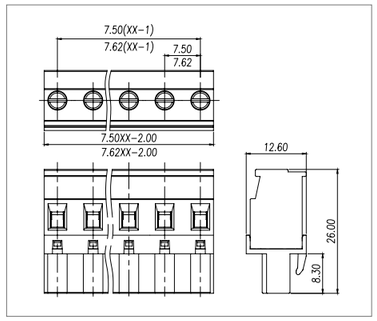



Pitch:5.0/5.08mm

WJ2EDGKBM-5.0/5.08

UL/CUL 技术参数 UL/CUL Technical Data				
等级	Use Group	B	C	D
额定电压	Rated Voltage [V]	300	-	300
额定电流	Rated Current [A]	15	-	10
接线范围 Wire Range	单芯线 Solid [AWG]	28~12		
	多芯线 Stranded [AWG]	28~12		
耐电压	Dielectric Voltage-Withstand	1.6KV		

IEC 技术参数 IEC Technical Data				
过电压类别	Overvoltage Category	Ⅲ	Ⅲ	Ⅱ
污染等级	Contamination Class	3	2	2
额定电压	Rated Voltage [V]	250	320	630
额定电流	Rated Current [A]	12	12	12
额定冲击电压	Impulse withstand voltage [KV]	4	4	4
导线截面积 Conductor cross section	硬质导线 Solid[mm²]	0.2~2.5		
	柔性导线 Flexible[mm²]	0.2~2.5		

材料 Material		
绝缘材料	Insulation Material	PA66
阻燃等级	Flame retardant rating	UL94V-0
导体材料	Conductor Material	Copper alloy
导体表面镀层	Plating of conductor surface	Sn plated

一般参数 Other Data		
间距/极数	Pitch/Poles [mm]/[P]	5.0,5.08/2~24
剥线长度	Stripping Length [mm]	7~8
螺丝/扭矩	Screw/Torque(Max)[N.m]	M3/0.5
工作温度	Operating temperature[℃]	-40~+105
焊锡温度	Soldering temperature	/
引针尺寸	Pin dimensions [mm]	/
PCB板孔径	PCB Hole Diameter [mm]	/

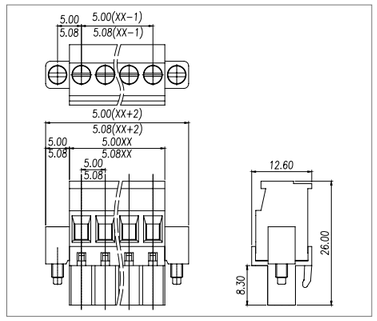



Pitch:7.5/7.62mm

WJ2EDGKBM-7.5/7.62

UL/CUL 技术参数 UL/CUL Technical Data				
等级	Use Group	B	C	D
额定电压	Rated Voltage [V]	300	-	300
额定电流	Rated Current [A]	15	-	10
接线范围 Wire Range	单芯线 Solid [AWG]	28~12		
	多芯线 Stranded [AWG]	28~12		
耐电压	Dielectric Voltage-Withstand	1.6KV		

IEC 技术参数 IEC Technical Data				
过电压类别	Overvoltage Category	Ⅲ	Ⅲ	Ⅱ
污染等级	Contamination Class	3	2	2
额定电压	Rated Voltage [V]	500	630	1000
额定电流	Rated Current [A]	12	12	12
额定冲击电压	Impulse withstand voltage [KV]	6	6	6
导线截面积 Conductor cross section	硬质导线 Solid[mm²]	0.2~2.5		
	柔性导线 Flexible[mm²]	0.2~2.5		

材料 Material		
绝缘材料	Insulation Material	PA66
阻燃等级	Flame retardant rating	UL94V-0
导体材料	Conductor Material	Copper alloy
导体表面镀层	Plating of conductor surface	Sn plated

一般参数 Other Data		
间距/极数	Pitch/Poles [mm]/[P]	7.5,7.62/2~24
剥线长度	Stripping Length [mm]	7~8
螺丝/扭矩	Screw/Torque(Max)[N.m]	M3/0.5
工作温度	Operating temperature[℃]	-40~+105
焊锡温度	Soldering temperature	/
引针尺寸	Pin dimensions [mm]	/
PCB板孔径	PCB Hole Diameter [mm]	/

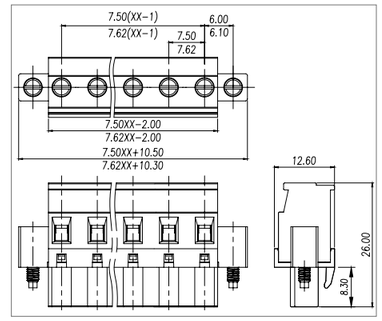



Pitch:5.08mm

WJ2EDGKAH-5.08

UL/CUL 技术参数 UL/CUL Technical Data				
等级	Use Group	B	C	D
额定电压	Rated Voltage [V]	300	-	300
额定电流	Rated Current [A]	15	-	10
接线范围 Wire Range	单芯线 Solid [AWG]	28~12		
	多芯线 Stranded [AWG]	28~12		
耐电压	Dielectric Voltage-Withstand	1.6KV		

IEC 技术参数 IEC Technical Data				
过电压类别	Overvoltage Category	Ⅲ	Ⅲ	Ⅱ
污染等级	Contamination Class	3	2	2
额定电压	Rated Voltage [V]	250	320	630
额定电流	Rated Current [A]	12	12	12
额定冲击电压	Impulse withstand voltage [KV]	4	4	4
导线截面积 Conductor cross section	硬质导线 Solid[mm²]	0.2~2.5		
	柔性导线 Flexible[mm²]	0.2~2.5		

材料 Material		
绝缘材料	Insulation Material	PA66
阻燃等级	Flame retardant rating	UL94V-0
导体材料	Conductor Material	Copper alloy
导体表面镀层	Plating of conductor surface	Sn plated

一般参数 Other Data		
间距/极数	Pitch/Poles [mm]/[P]	5.08/2~24
剥线长度	Stripping Length [mm]	7~8
螺丝/扭矩	Screw/Torque(Max)[N.m]	M3/0.5
工作温度	Operating temperature[℃]	-40~+105
焊锡温度	Soldering temperature	/
引针尺寸	Pin dimensions [mm]	/
PCB板孔径	PCB Hole Diameter [mm]	/

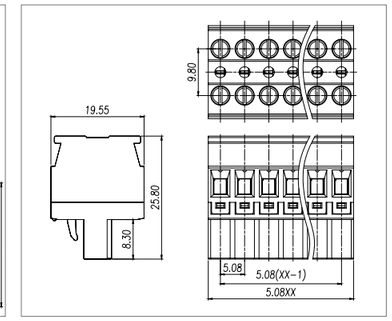



Pitch:5.08mm

WJ2EDGKAHM-5.08

UL/CUL 技术参数 UL/CUL Technical Data				
等级	Use Group	B	C	D
额定电压	Rated Voltage [V]	300	-	300
额定电流	Rated Current [A]	15	-	10
接线范围 Wire Range	单芯线 Solid [AWG]	28~12		
	多芯线 Stranded [AWG]	28~12		
耐电压	Dielectric Voltage-Withstand	1.6KV		
IEC 技术参数 IEC Technical Data				
过电压类别	Overvoltage Category	Ⅲ	Ⅲ	Ⅱ
污染等级	Contamination Class	3	2	2
额定电压	Rated Voltage [V]	250	320	630
额定电流	Rated Current [A]	12	12	12
额定冲击电压	Impulse withstand voltage [KV]	4	4	4
导线截面积 Conductor cross section	硬质导线 Solid[mm²]	0.2~2.5		
	柔性导线 Flexible[mm²]	0.2~2.5		
材料 Material				
绝缘材料	Insulation Material	PA66		
阻燃等级	Flame retardant rating	UL94V-0		
导体材料	Conductor Material	Copper alloy		
导体表面镀层	Plating of conductor surface	Sn plated		
一般参数 Other Data				
间距/极数	Pitch/Poles [mm]/[P]	5.08/2~24		
剥线长度	Stripping Length [mm]	7~8		
螺丝/扭矩	Screw/Torque(Max)[N.m]	M3/0.5		
工作温度	Operating temperature[℃]	-40~+105		
焊锡温度	Soldering temperature	/		
引针尺寸	Pin dimensions [mm]	/		
PCB板孔径	PCB Hole Diameter [mm]	/		

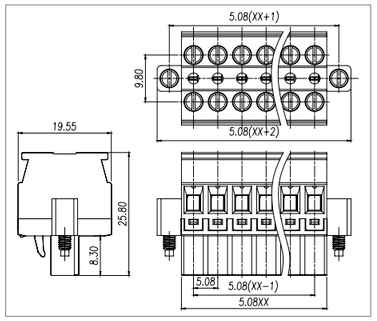



Pitch:5.0/5.08mm

WJ2EDGKC-5.0/5.08

UL/CUL 技术参数 UL/CUL Technical Data				
等级	Use Group	B	C	D
额定电压	Rated Voltage [V]	300	-	300
额定电流	Rated Current [A]	15	-	10
接线范围 Wire Range	单芯线 Solid [AWG]	28~12		
	多芯线 Stranded [AWG]	28~12		
耐电压	Dielectric Voltage-Withstand	1.6KV		
IEC 技术参数 IEC Technical Data				
过电压类别	Overvoltage Category	Ⅲ	Ⅲ	Ⅱ
污染等级	Contamination Class	3	2	2
额定电压	Rated Voltage [V]	250	320	630
额定电流	Rated Current [A]	15	15	15
额定冲击电压	Impulse withstand voltage [KV]	4	4	4
导线截面积 Conductor cross section	硬质导线 Solid[mm²]	0.2~2.5		
	柔性导线 Flexible[mm²]	0.2~2.5		
材料 Material				
绝缘材料	Insulation Material	PA66		
阻燃等级	Flame retardant rating	UL94V-0		
导体材料	Conductor Material	Copper alloy		
导体表面镀层	Plating of conductor surface	Sn plated		
一般参数 Other Data				
间距/极数	Pitch/Poles [mm]/[P]	5.0,5.08/2~24		
剥线长度	Stripping Length [mm]	9-10		
螺丝/扭矩	Screw/Torque(Max)[N.m]	M2.5/0.4		
工作温度	Operating temperature[℃]	-40~+105		
焊锡温度	Soldering temperature	/		
引针尺寸	Pin dimensions [mm]	/		
PCB板孔径	PCB Hole Diameter [mm]	/		

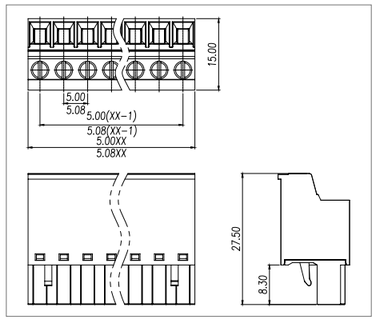



Pitch:5.0/5.08mm

WJ2EDGKCM-5.0/5.08

UL/CUL 技术参数 UL/CUL Technical Data				
等级	Use Group	B	C	D
额定电压	Rated Voltage [V]	300	-	300
额定电流	Rated Current [A]	15	-	10
接线范围 Wire Range	单芯线 Solid [AWG]	28~12		
	多芯线 Stranded [AWG]	28~12		
耐电压	Dielectric Voltage-Withstand	1.6KV		
IEC 技术参数 IEC Technical Data				
过电压类别	Overvoltage Category	Ⅲ	Ⅲ	Ⅱ
污染等级	Contamination Class	3	2	2
额定电压	Rated Voltage [V]	250	320	630
额定电流	Rated Current [A]	15	15	15
额定冲击电压	Impulse withstand voltage [KV]	4	4	4
导线截面积 Conductor cross section	硬质导线 Solid[mm²]	0.2~2.5		
	柔性导线 Flexible[mm²]	0.2~2.5		
材料 Material				
绝缘材料	Insulation Material	PA66		
阻燃等级	Flame retardant rating	UL94V-0		
导体材料	Conductor Material	Copper alloy		
导体表面镀层	Plating of conductor surface	Sn plated		
一般参数 Other Data				
间距/极数	Pitch/Poles [mm]/[P]	5.0,5.08/2~24		
剥线长度	Stripping Length [mm]	9-10		
螺丝/扭矩	Screw/Torque(Max)[N.m]	M2.5/0.4		
工作温度	Operating temperature[℃]	-40~+105		
焊锡温度	Soldering temperature	/		
引针尺寸	Pin dimensions [mm]	/		
PCB板孔径	PCB Hole Diameter [mm]	/		

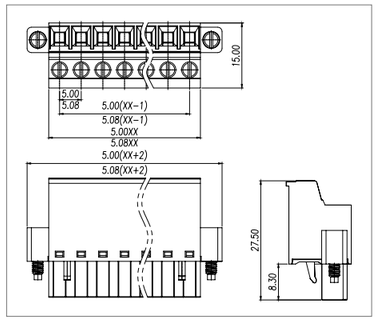



Pitch:5.0/5.08mm

WJ2EDGKD-5.0/5.08

UL/CUL 技术参数 UL/CUL Technical Data				
等级	Use Group	B	C	D
额定电压	Rated Voltage [V]	300	-	300
额定电流	Rated Current [A]	10	-	10
接线范围 Wire Range	单芯线 Solid [AWG]	28~12		
	多芯线 Stranded [AWG]	28~12		
耐电压	Dielectric Voltage-Withstand	1.6KV		
IEC 技术参数 IEC Technical Data				
过电压类别	Overvoltage Category	Ⅲ	Ⅲ	Ⅱ
污染等级	Contamination Class	3	2	2
额定电压	Rated Voltage [V]	250	320	630
额定电流	Rated Current [A]	12	12	12
额定冲击电压	Impulse withstand voltage [KV]	4	4	4
导线截面积 Conductor cross section	硬质导线 Solid[mm²]	0.2~2.5		
	柔性导线 Flexible[mm²]	0.2~2.5		
材料 Material				
绝缘材料	Insulation Material	PA66		
阻燃等级	Flame retardant rating	UL94V-0		
导体材料	Conductor Material	Copper alloy		
导体表面镀层	Plating of conductor surface	Sn plated		
一般参数 Other Data				
间距/极数	Pitch/Poles [mm]/[P]	5.0,5.08/2~24		
剥线长度	Stripping Length [mm]	9-10		
螺丝/扭矩	Screw/Torque(Max)[N.m]	/		
工作温度	Operating temperature[℃]	-40~+105		
焊锡温度	Soldering temperature	/		
引针尺寸	Pin dimensions [mm]	/		
PCB板孔径	PCB Hole Diameter [mm]	/		

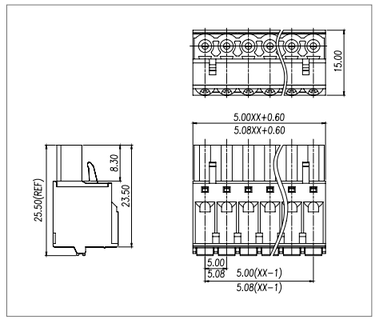



Pitch:5.0/5.08mm

WJ2EDGKDM-5.0/5.08

UL/CUL 技术参数 UL/CUL Technical Data				
等级	Use Group	B	C	D
额定电压	Rated Voltage [V]	300	-	300
额定电流	Rated Current [A]	10	-	10
接线范围 Wire Range	单芯线 Solid [AWG]	28~12		
	多芯线 Stranded [AWG]	28~12		
耐电压	Dielectric Voltage-Withstand	1.6KV		
IEC 技术参数 IEC Technical Data				
过电压类别	Overvoltage Category	Ⅲ	Ⅲ	Ⅱ
污染等级	Contamination Class	3	2	2
额定电压	Rated Voltage [V]	250	320	630
额定电流	Rated Current [A]	12	12	12
额定冲击电压	Impulse withstand voltage [KV]	4	4	4
导线截面积 Conductor cross section	硬质导线 Solid[mm²]	0.2~2.5		
	柔性导线 Flexible[mm²]	0.2~2.5		
材料 Material				
绝缘材料	Insulation Material	PA66		
阻燃等级	Flame retardant rating	UL94V-0		
导体材料	Conductor Material	Copper alloy		
导体表面镀层	Plating of conductor surface	Sn plated		
一般参数 Other Data				
间距/极数	Pitch/Poles [mm]/[P]	5.0,5.08/2~24		
剥线长度	Stripping Length [mm]	9-10		
螺丝/扭矩	Screw/Torque(Max)[N.m]	/		
工作温度	Operating temperature[℃]	-40~+105		
焊锡温度	Soldering temperature	/		
引针尺寸	Pin dimensions [mm]	/		
PCB板孔径	PCB Hole Diameter [mm]	/		

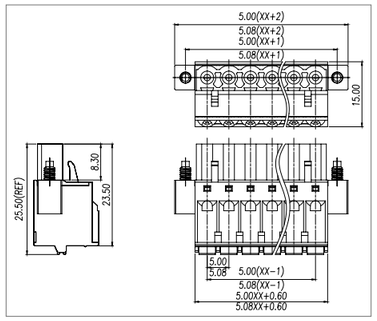



Pitch:5.0/5.08mm

WJ2EDGKDG-5.0/5.08

UL/CUL 技术参数 UL/CUL Technical Data				
等级	Use Group	B	C	D
额定电压	Rated Voltage [V]	300	-	300
额定电流	Rated Current [A]	10	-	10
接线范围 Wire Range	单芯线 Solid [AWG]	28~12		
	多芯线 Stranded [AWG]	28~12		
耐电压	Dielectric Voltage-Withstand	1.6KV		
IEC 技术参数 IEC Technical Data				
过电压类别	Overvoltage Category	Ⅲ	Ⅲ	Ⅱ
污染等级	Contamination Class	3	2	2
额定电压	Rated Voltage [V]	250	320	630
额定电流	Rated Current [A]	12	12	12
额定冲击电压	Impulse withstand voltage [KV]	4	4	4
导线截面积 Conductor cross section	硬质导线 Solid[mm²]	0.2~2.5		
	柔性导线 Flexible[mm²]	0.2~2.5		
材料 Material				
绝缘材料	Insulation Material	PA66		
阻燃等级	Flame retardant rating	UL94V-0		
导体材料	Conductor Material	Copper alloy		
导体表面镀层	Plating of conductor surface	Sn plated		
一般参数 Other Data				
间距/极数	Pitch/Poles [mm]/[P]	5.0,5.08/2~24		
剥线长度	Stripping Length [mm]	9-10		
螺丝/扭矩	Screw/Torque(Max)[N.m]	/		
工作温度	Operating temperature[℃]	-40~+105		
焊锡温度	Soldering temperature	/		
引针尺寸	Pin dimensions [mm]	/		
PCB板孔径	PCB Hole Diameter [mm]	/		

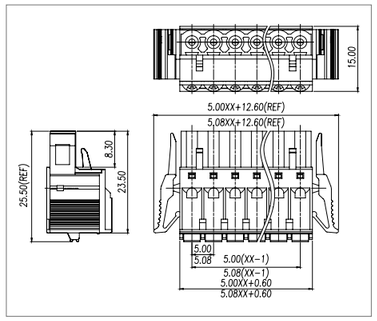

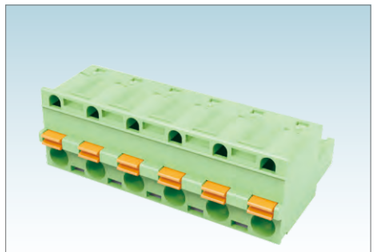

Pitch:7.5/7.62mm

WJ2EDGKD-7.5/7.62

UL/CUL 技术参数 UL/CUL Technical Data				
等级	Use Group	B	C	D
额定电压	Rated Voltage [V]	300	-	300
额定电流	Rated Current [A]	10	-	10
接线范围 Wire Range	单芯线 Solid [AWG]	28~12		
	多芯线 Stranded [AWG]	28~12		
耐电压	Dielectric Voltage-Withstand	1.6KV		

IEC 技术参数 IEC Technical Data				
过电压类别	Overvoltage Category	Ⅲ	Ⅲ	Ⅱ
污染等级	Contamination Class	3	2	2
额定电压	Rated Voltage [V]	400	630	1000
额定电流	Rated Current [A]	12	12	12
额定冲击电压	Impulse withstand voltage [KV]	6	6	6
导线截面积 Conductor cross section	硬质导线 Solid[mm²]	0.2~2.5		
	柔性导线 Flexible[mm²]	0.2~2.5		

材料 Material		
绝缘材料	Insulation Material	PA66
阻燃等级	Flame retardant rating	UL94V-0
导体材料	Conductor Material	Copper alloy
导体表面镀层	Plating of conductor surface	Sn plated

一般参数 Other Data		
间距/极数	Pitch/Poles [mm]/[P]	7.5,2~24/7.62,2~16
剥线长度	Stripping Length [mm]	9-10
螺丝/扭矩	Screw/Torque(Max)[N.m]	/
工作温度	Operating temperature[℃]	-40~+105
焊锡温度	Soldering temperature	/
引针尺寸	Pin dimensions [mm]	/
PCB板孔径	PCB Hole Diameter [mm]	/

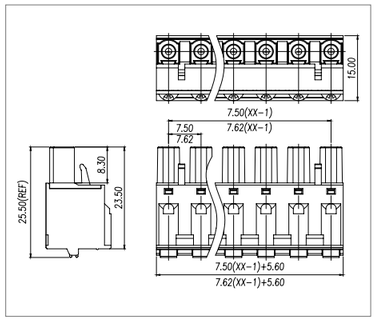

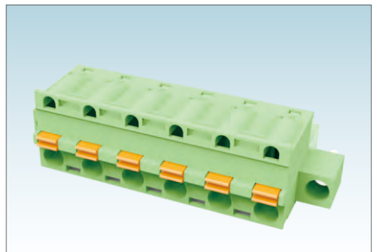

Pitch:7.5/7.62mm

WJ2EDGKDM-7.5/7.62

UL/CUL 技术参数 UL/CUL Technical Data				
等级	Use Group	B	C	D
额定电压	Rated Voltage [V]	300	-	300
额定电流	Rated Current [A]	10	-	10
接线范围 Wire Range	单芯线 Solid [AWG]	28~12		
	多芯线 Stranded [AWG]	28~12		
耐电压	Dielectric Voltage-Withstand	1.6KV		

IEC 技术参数 IEC Technical Data				
过电压类别	Overvoltage Category	Ⅲ	Ⅲ	Ⅱ
污染等级	Contamination Class	3	2	2
额定电压	Rated Voltage [V]	400	630	1000
额定电流	Rated Current [A]	12	12	12
额定冲击电压	Impulse withstand voltage [KV]	6	6	6
导线截面积 Conductor cross section	硬质导线 Solid[mm²]	0.2~2.5		
	柔性导线 Flexible[mm²]	0.2~2.5		

材料 Material		
绝缘材料	Insulation Material	PA66
阻燃等级	Flame retardant rating	UL94V-0
导体材料	Conductor Material	Copper alloy
导体表面镀层	Plating of conductor surface	Sn plated

一般参数 Other Data		
间距/极数	Pitch/Poles [mm]/[P]	7.5,2~24/7.62,2~16
剥线长度	Stripping Length [mm]	9-10
螺丝/扭矩	Screw/Torque(Max)[N.m]	/
工作温度	Operating temperature[℃]	-40~+105
焊锡温度	Soldering temperature	/
引针尺寸	Pin dimensions [mm]	/
PCB板孔径	PCB Hole Diameter [mm]	/

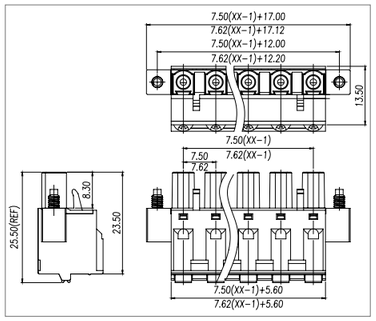

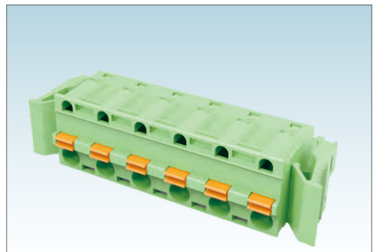

Pitch:7.5/7.62mm

WJ2EDGKDG-7.5/7.62

UL/CUL 技术参数 UL/CUL Technical Data				
等级	Use Group	B	C	D
额定电压	Rated Voltage [V]	300	-	300
额定电流	Rated Current [A]	10	-	10
接线范围 Wire Range	单芯线 Solid [AWG]	28~12		
	多芯线 Stranded [AWG]	28~12		
耐电压	Dielectric Voltage-Withstand	1.6KV		

IEC 技术参数 IEC Technical Data				
过电压类别	Overvoltage Category	Ⅲ	Ⅲ	Ⅱ
污染等级	Contamination Class	3	2	2
额定电压	Rated Voltage [V]	400	630	1000
额定电流	Rated Current [A]	12	12	12
额定冲击电压	Impulse withstand voltage [KV]	6	6	6
导线截面积 Conductor cross section	硬质导线 Solid[mm²]	0.2~2.5		
	柔性导线 Flexible[mm²]	0.2~2.5		

材料 Material		
绝缘材料	Insulation Material	PA66
阻燃等级	Flame retardant rating	UL94V-0
导体材料	Conductor Material	Copper alloy
导体表面镀层	Plating of conductor surface	Sn plated

一般参数 Other Data		
间距/极数	Pitch/Poles [mm]/[P]	7.5,2~24/7.62,2~16
剥线长度	Stripping Length [mm]	9-10
螺丝/扭矩	Screw/Torque(Max)[N.m]	/
工作温度	Operating temperature[℃]	-40~+105
焊锡温度	Soldering temperature	/
引针尺寸	Pin dimensions [mm]	/
PCB板孔径	PCB Hole Diameter [mm]	/

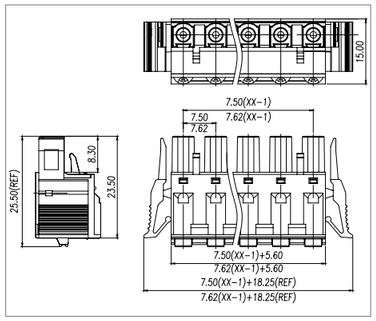

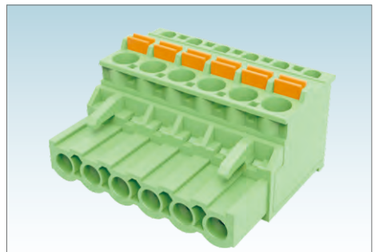

Pitch:5.0/5.08mm

WJ2EDGKDA-5.0/5.08

UL/CUL 技术参数 UL/CUL Technical Data				
等级	Use Group	B	C	D
额定电压	Rated Voltage [V]	300	-	300
额定电流	Rated Current [A]	10	-	10
接线范围 Wire Range	单芯线 Solid [AWG]	28~12		
	多芯线 Stranded [AWG]	28~12		
耐电压	Dielectric Voltage-Withstand	1.6KV		

IEC 技术参数 IEC Technical Data				
过电压类别	Overvoltage Category	Ⅲ	Ⅲ	Ⅱ
污染等级	Contamination Class	3	2	2
额定电压	Rated Voltage [V]	250	320	630
额定电流	Rated Current [A]	12	12	12
额定冲击电压	Impulse withstand voltage [KV]	4	4	4
导线截面积 Conductor cross section	硬质导线 Solid[mm²]	0.2~2.5		
	柔性导线 Flexible[mm²]	0.2~2.5		

材料 Material		
绝缘材料	Insulation Material	PA66
阻燃等级	Flame retardant rating	UL94V-0
导体材料	Conductor Material	Copper alloy
导体表面镀层	Plating of conductor surface	Sn plated

一般参数 Other Data		
间距/极数	Pitch/Poles [mm]/[P]	5.0,5.08/2~24
剥线长度	Stripping Length [mm]	9-10
螺丝/扭矩	Screw/Torque(Max)[N.m]	/
工作温度	Operating temperature[℃]	-40~+105
焊锡温度	Soldering temperature	/
引针尺寸	Pin dimensions [mm]	/
PCB板孔径	PCB Hole Diameter [mm]	/

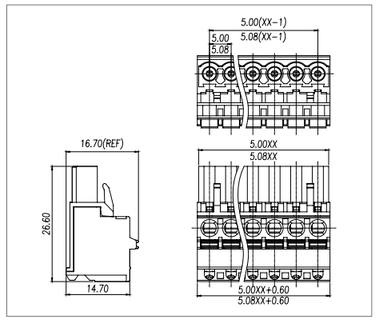

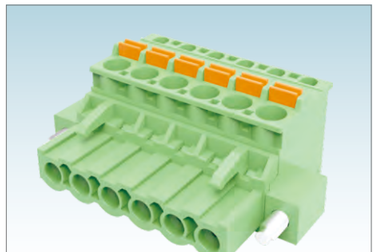

Pitch:5.0/5.08mm

WJ2EDGKDAM-5.0/5.08

UL/CUL 技术参数 UL/CUL Technical Data				
等级	Use Group	B	C	D
额定电压	Rated Voltage [V]	300	-	300
额定电流	Rated Current [A]	10	-	10
接线范围 Wire Range	单芯线 Solid [AWG]	28~12		
	多芯线 Stranded [AWG]	28~12		
耐电压	Dielectric Voltage-Withstand	1.6KV		

IEC 技术参数 IEC Technical Data				
过电压类别	Overvoltage Category	Ⅲ	Ⅲ	Ⅱ
污染等级	Contamination Class	3	2	2
额定电压	Rated Voltage [V]	250	320	630
额定电流	Rated Current [A]	12	12	12
额定冲击电压	Impulse withstand voltage [KV]	4	4	4
导线截面积 Conductor cross section	硬质导线 Solid[mm²]	0.2~2.5		
	柔性导线 Flexible[mm²]	0.2~2.5		

材料 Material		
绝缘材料	Insulation Material	PA66
阻燃等级	Flame retardant rating	UL94V-0
导体材料	Conductor Material	Copper alloy
导体表面镀层	Plating of conductor surface	Sn plated

一般参数 Other Data		
间距/极数	Pitch/Poles [mm]/[P]	5.0,5.08/2~24
剥线长度	Stripping Length [mm]	9-10
螺丝/扭矩	Screw/Torque(Max)[N.m]	/
工作温度	Operating temperature[℃]	-40~+105
焊锡温度	Soldering temperature	/
引针尺寸	Pin dimensions [mm]	/
PCB板孔径	PCB Hole Diameter [mm]	/

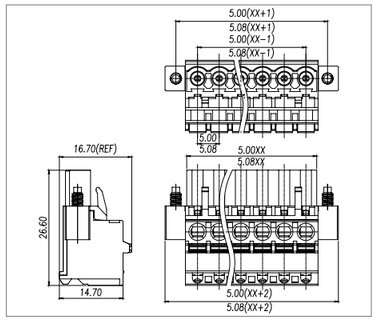

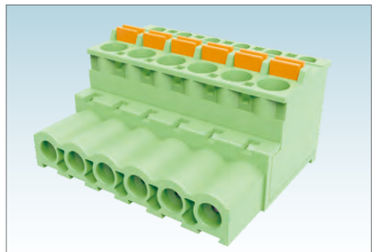

Pitch:5.0/5.08mm

WJ2EDGKDB-5.0/5.08

UL/CUL 技术参数 UL/CUL Technical Data				
等级	Use Group	B	C	D
额定电压	Rated Voltage [V]	300	-	300
额定电流	Rated Current [A]	10	-	10
接线范围 Wire Range	单芯线 Solid [AWG]	28~12		
	多芯线 Stranded [AWG]	28~12		
耐电压	Dielectric Voltage-Withstand	1.6KV		

IEC 技术参数 IEC Technical Data				
过电压类别	Overvoltage Category	Ⅲ	Ⅲ	Ⅱ
污染等级	Contamination Class	3	2	2
额定电压	Rated Voltage [V]	250	320	630
额定电流	Rated Current [A]	12	12	12
额定冲击电压	Impulse withstand voltage [KV]	4	4	4
导线截面积 Conductor cross section	硬质导线 Solid[mm²]	0.2~2.5		
	柔性导线 Flexible[mm²]	0.2~2.5		

材料 Material		
绝缘材料	Insulation Material	PA66
阻燃等级	Flame retardant rating	UL94V-0
导体材料	Conductor Material	Copper alloy
导体表面镀层	Plating of conductor surface	Sn plated

一般参数 Other Data		
间距/极数	Pitch/Poles [mm]/[P]	5.0,5.08/2~24
剥线长度	Stripping Length [mm]	9-10
螺丝/扭矩	Screw/Torque(Max)[N.m]	/
工作温度	Operating temperature[℃]	-40~+105
焊锡温度	Soldering temperature	/
引针尺寸	Pin dimensions [mm]	/
PCB板孔径	PCB Hole Diameter [mm]	/

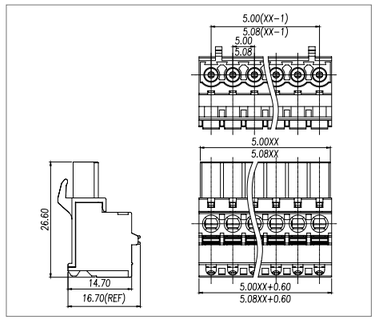



Pitch:5.0/5.08mm

WJ2EDGKDBM-5.0/5.08

UL/CUL 技术参数 UL/CUL Technical Data				
等级	Use Group	B	C	D
额定电压	Rated Voltage [V]	300	-	300
额定电流	Rated Current [A]	10	-	10
接线范围 Wire Range	单芯线 Solid [AWG]	28~12		
	多芯线 Stranded [AWG]	28~12		
耐电压	Dielectric Voltage-Withstand	1.6KV		

IEC 技术参数 IEC Technical Data				
过电压类别	Overvoltage Category	Ⅲ	Ⅲ	Ⅱ
污染等级	Contamination Class	3	2	2
额定电压	Rated Voltage [V]	250	320	630
额定电流	Rated Current [A]	12	12	12
额定冲击电压	Impulse withstand voltage [KV]	4	4	4
导线截面积 Conductor cross section	硬质导线 Solid[mm²]	0.2~2.5		
	柔性导线 Flexible[mm²]	0.2~2.5		

材料 Material		
绝缘材料	Insulation Material	PA66
阻燃等级	Flame retardant rating	UL94V-0
导体材料	Conductor Material	Copper alloy
导体表面镀层	Plating of conductor surface	Sn plated

一般参数 Other Data		
间距/极数	Pitch/Poles [mm]/[P]	5.0,5.08/2~24
剥线长度	Stripping Length [mm]	9-10
螺丝/扭矩	Screw/Torque(Max)[N.m]	/
工作温度	Operating temperature[℃]	-40~+105
焊锡温度	Soldering temperature	/
引针尺寸	Pin dimensions [mm]	/
PCB板孔径	PCB Hole Diameter [mm]	/

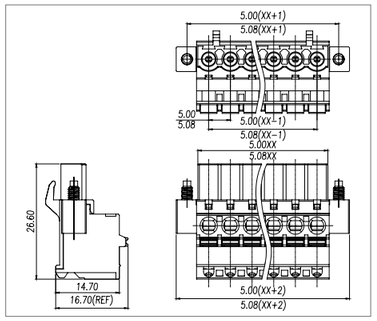



Pitch:5.08mm

WJ2EDGKDH-5.08

UL/CUL 技术参数 UL/CUL Technical Data				
等级	Use Group	B	C	D
额定电压	Rated Voltage [V]	300	-	300
额定电流	Rated Current [A]	10	-	10
接线范围 Wire Range	单芯线 Solid [AWG]	28~12		
	多芯线 Stranded [AWG]	28~12		
耐电压	Dielectric Voltage-Withstand	1.6KV		

IEC 技术参数 IEC Technical Data				
过电压类别	Overvoltage Category	Ⅲ	Ⅲ	Ⅱ
污染等级	Contamination Class	3	2	2
额定电压	Rated Voltage [V]	320	320	630
额定电流	Rated Current [A]	12	12	12
额定冲击电压	Impulse withstand voltage [KV]	4	4	4
导线截面积 Conductor cross section	硬质导线 Solid[mm²]	0.2~2.5		
	柔性导线 Flexible[mm²]	0.2~2.5		

材料 Material		
绝缘材料	Insulation Material	PA66
阻燃等级	Flame retardant rating	UL94V-0
导体材料	Conductor Material	Copper alloy
导体表面镀层	Plating of conductor surface	Sn plated

一般参数 Other Data		
间距/极数	Pitch/Poles [mm]/[P]	5.08/2~24
剥线长度	Stripping Length [mm]	9-10
螺丝/扭矩	Screw/Torque(Max)[N.m]	/
工作温度	Operating temperature[℃]	-40~+105
焊锡温度	Soldering temperature	/
引针尺寸	Pin dimensions [mm]	/
PCB板孔径	PCB Hole Diameter [mm]	/

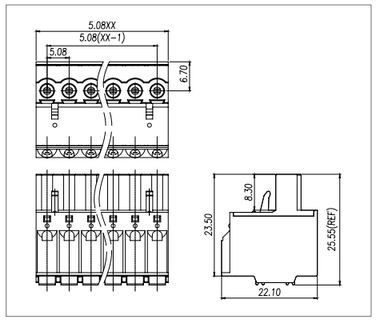



Pitch:5.08mm

WJ2EDGKDHM-5.08

UL/CUL 技术参数 UL/CUL Technical Data				
等级	Use Group	B	C	D
额定电压	Rated Voltage [V]	300	-	300
额定电流	Rated Current [A]	10	-	10
接线范围 Wire Range	单芯线 Solid [AWG]	28~12		
	多芯线 Stranded [AWG]	28~12		
耐电压	Dielectric Voltage-Withstand	1.6KV		

IEC 技术参数 IEC Technical Data				
过电压类别	Overvoltage Category	Ⅲ	Ⅲ	Ⅱ
污染等级	Contamination Class	3	2	2
额定电压	Rated Voltage [V]	320	320	630
额定电流	Rated Current [A]	12	12	12
额定冲击电压	Impulse withstand voltage [KV]	4	4	4
导线截面积 Conductor cross section	硬质导线 Solid[mm²]	0.2~2.5		
	柔性导线 Flexible[mm²]	0.2~2.5		

材料 Material		
绝缘材料	Insulation Material	PA66
阻燃等级	Flame retardant rating	UL94V-0
导体材料	Conductor Material	Copper alloy
导体表面镀层	Plating of conductor surface	Sn plated

一般参数 Other Data		
间距/极数	Pitch/Poles [mm]/[P]	5.08/2~24
剥线长度	Stripping Length [mm]	9-10
螺丝/扭矩	Screw/Torque(Max)[N.m]	/
工作温度	Operating temperature[℃]	-40~+105
焊锡温度	Soldering temperature	/
引针尺寸	Pin dimensions [mm]	/
PCB板孔径	PCB Hole Diameter [mm]	/

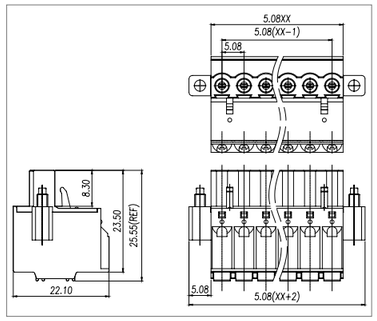



Pitch:5.08mm

WJ2EDGKDHG-5.08

UL/CUL 技术参数 UL/CUL Technical Data				
等级	Use Group	B	C	D
额定电压	Rated Voltage [V]	300	-	300
额定电流	Rated Current [A]	10	-	10
接线范围 Wire Range	单芯线 Solid [AWG]	28~12		
	多芯线 Stranded [AWG]	28~12		
耐电压	Dielectric Voltage-Withstand	1.6KV		

IEC 技术参数 IEC Technical Data				
过电压类别	Overvoltage Category	Ⅲ	Ⅲ	Ⅱ
污染等级	Contamination Class	3	2	2
额定电压	Rated Voltage [V]	320	320	630
额定电流	Rated Current [A]	12	12	12
额定冲击电压	Impulse withstand voltage [KV]	4	4	4
导线截面积 Conductor cross section	硬质导线 Solid[mm²]	0.2~2.5		
	柔性导线 Flexible[mm²]	0.2~2.5		

材料 Material		
绝缘材料	Insulation Material	PA66
阻燃等级	Flame retardant rating	UL94V-0
导体材料	Conductor Material	Copper alloy
导体表面镀层	Plating of conductor surface	Sn plated

一般参数 Other Data		
间距/极数	Pitch/Poles [mm]/[P]	5.08/2~24
剥线长度	Stripping Length [mm]	9-10
螺丝/扭矩	Screw/Torque(Max)[N.m]	/
工作温度	Operating temperature[℃]	-40~+105
焊锡温度	Soldering temperature	/
引针尺寸	Pin dimensions [mm]	/
PCB板孔径	PCB Hole Diameter [mm]	/

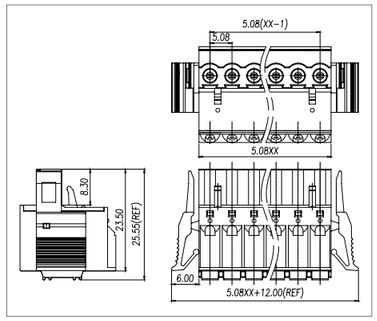



Pitch:5.0/5.08mm

WJ2EDGKDF-5.0/5.08

UL/CUL 技术参数 UL/CUL Technical Data				
等级	Use Group	B	C	D
额定电压	Rated Voltage [V]	300	-	300
额定电流	Rated Current [A]	10	-	10
接线范围 Wire Range	单芯线 Solid [AWG]	28~12		
	多芯线 Stranded [AWG]	28~12		
耐电压	Dielectric Voltage-Withstand	1.6KV		

IEC 技术参数 IEC Technical Data				
过电压类别	Overvoltage Category	Ⅲ	Ⅲ	Ⅱ
污染等级	Contamination Class	3	2	2
额定电压	Rated Voltage [V]	320	320	630
额定电流	Rated Current [A]	12	12	12
额定冲击电压	Impulse withstand voltage [KV]	4	4	4
导线截面积 Conductor cross section	硬质导线 Solid[mm²]	0.2~2.5		
	柔性导线 Flexible[mm²]	0.2~2.5		

材料 Material		
绝缘材料	Insulation Material	PA66
阻燃等级	Flame retardant rating	UL94V-0
导体材料	Conductor Material	Copper alloy
导体表面镀层	Plating of conductor surface	Sn plated

一般参数 Other Data		
间距/极数	Pitch/Poles [mm]/[P]	5.0,5.08/2~24
剥线长度	Stripping Length [mm]	9-10
螺丝/扭矩	Screw/Torque(Max)[N.m]	/
工作温度	Operating temperature[℃]	-40~+105
焊锡温度	Soldering temperature	/
引针尺寸	Pin dimensions [mm]	/
PCB板孔径	PCB Hole Diameter [mm]	/

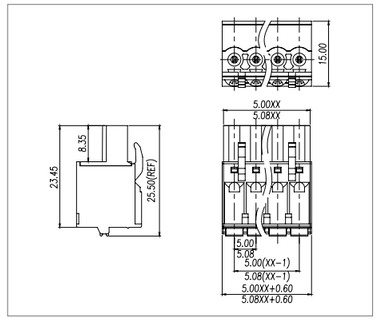

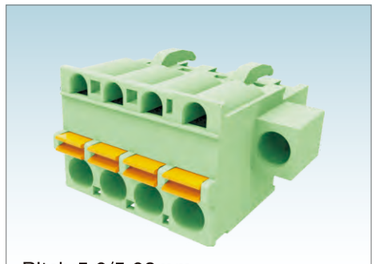

Pitch:5.0/5.08mm

WJ2EDGKDFM-5.0/5.08

UL/CUL 技术参数 UL/CUL Technical Data				
等级	Use Group	B	C	D
额定电压	Rated Voltage [V]	300	-	300
额定电流	Rated Current [A]	10	-	10
接线范围 Wire Range	单芯线 Solid [AWG]	28~12		
	多芯线 Stranded [AWG]	28~12		
耐电压	Dielectric Voltage-Withstand	1.6KV		

IEC 技术参数 IEC Technical Data				
过电压类别	Overvoltage Category	Ⅲ	Ⅲ	Ⅱ
污染等级	Contamination Class	3	2	2
额定电压	Rated Voltage [V]	320	320	630
额定电流	Rated Current [A]	12	12	12
额定冲击电压	Impulse withstand voltage [KV]	4	4	4
导线截面积 Conductor cross section	硬质导线 Solid[mm²]	0.2~2.5		
	柔性导线 Flexible[mm²]	0.2~2.5		

材料 Material		
绝缘材料	Insulation Material	PA66
阻燃等级	Flame retardant rating	UL94V-0
导体材料	Conductor Material	Copper alloy
导体表面镀层	Plating of conductor surface	Sn plated

一般参数 Other Data		
间距/极数	Pitch/Poles [mm]/[P]	5.0,5.08/2~24
剥线长度	Stripping Length [mm]	9-10
螺丝/扭矩	Screw/Torque(Max)[N.m]	/
工作温度	Operating temperature[℃]	-40~+105
焊锡温度	Soldering temperature	/
引针尺寸	Pin dimensions [mm]	/
PCB板孔径	PCB Hole Diameter [mm]	/

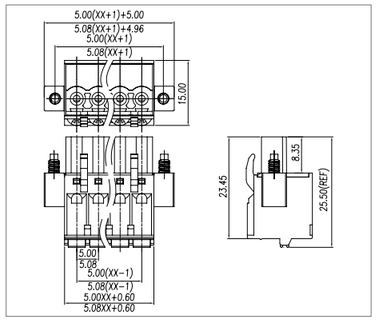

ISO14001 ISO45001 ISO9001 ISO80079-34 ISO/TS 22163

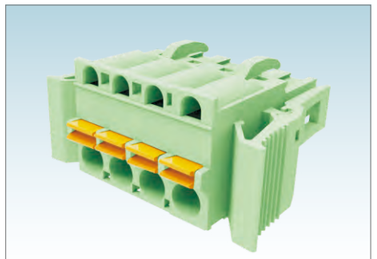

Pitch:5.0/5.08mm

WJ2EDGKDFG-5.0/5.08

UL/CUL 技术参数 UL/CUL Technical Data				
等级	Use Group	B	C	D
额定电压	Rated Voltage [V]	300	-	300
额定电流	Rated Current [A]	10	-	10
接线范围 Wire Range	单芯线 Solid [AWG]	28~12		
	多芯线 Stranded [AWG]	28~12		
耐电压	Dielectric Voltage-Withstand	1.6KV		

IEC 技术参数 IEC Technical Data				
过电压类别	Overvoltage Category	Ⅲ	Ⅲ	Ⅱ
污染等级	Contamination Class	3	2	2
额定电压	Rated Voltage [V]	320	320	630
额定电流	Rated Current [A]	12	12	12
额定冲击电压	Impulse withstand voltage [KV]	4	4	4
导线截面积 Conductor cross section	硬质导线 Solid[mm²]	0.2~2.5		
	柔性导线 Flexible[mm²]	0.2~2.5		

材料 Material		
绝缘材料	Insulation Material	PA66
阻燃等级	Flame retardant rating	UL94V-0
导体材料	Conductor Material	Copper alloy
导体表面镀层	Plating of conductor surface	Sn plated

一般参数 Other Data		
间距/极数	Pitch/Poles [mm]/[P]	5.0,5.08/2~24
剥线长度	Stripping Length [mm]	9-10
螺丝/扭矩	Screw/Torque(Max)[N.m]	/
工作温度	Operating temperature[℃]	-40~+105
焊锡温度	Soldering temperature	/
引针尺寸	Pin dimensions [mm]	/
PCB板孔径	PCB Hole Diameter [mm]	/

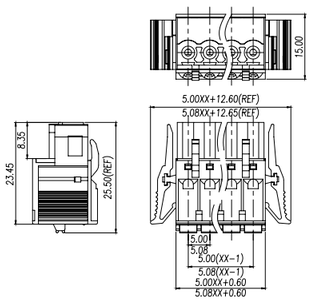



Pitch:5.0/5.08mm

WJ2EDGKF-5.0/5.08

UL/CUL 技术参数 UL/CUL Technical Data				
等级	Use Group	B	C	D
额定电压	Rated Voltage [V]	300	-	300
额定电流	Rated Current [A]	15	-	10
接线范围 Wire Range	单芯线 Solid [AWG]	28~12		
	多芯线 Stranded [AWG]	28~12		
耐电压	Dielectric Voltage-Withstand	1.6KV		

IEC 技术参数 IEC Technical Data				
过电压类别	Overvoltage Category	Ⅲ	Ⅲ	Ⅱ
污染等级	Contamination Class	3	2	2
额定电压	Rated Voltage [V]	250	320	630
额定电流	Rated Current [A]	20	20	20
额定冲击电压	Impulse withstand voltage [KV]	4	4	4
导线截面积 Conductor cross section	硬质导线 Solid[mm²]	0.2~2.5		
	柔性导线 Flexible[mm²]	0.2~2.5		

材料 Material		
绝缘材料	Insulation Material	PA66
阻燃等级	Flame retardant rating	UL94V-0
导体材料	Conductor Material	Copper alloy
导体表面镀层	Plating of conductor surface	Sn plated

一般参数 Other Data		
间距/极数	Pitch/Poles [mm]/[P]	5.0,5.08/2~24
剥线长度	Stripping Length [mm]	7~8
螺丝/扭矩	Screw/Torque(Max)[N.m]	M3/0.5
工作温度	Operating temperature[℃]	-40~+105
焊锡温度	Soldering temperature	/
引针尺寸	Pin dimensions [mm]	/
PCB板孔径	PCB Hole Diameter [mm]	/

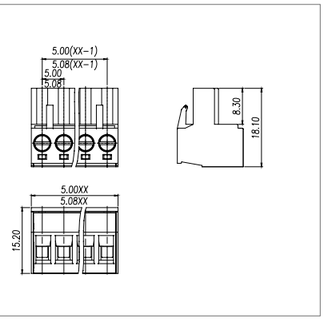



Pitch:5.0/5.08mm

WJ2EDGKFM-5.0/5.08

UL/CUL 技术参数 UL/CUL Technical Data				
等级	Use Group	B	C	D
额定电压	Rated Voltage [V]	300	-	300
额定电流	Rated Current [A]	15	-	10
接线范围 Wire Range	单芯线 Solid [AWG]	28~12		
	多芯线 Stranded [AWG]	28~12		
耐电压	Dielectric Voltage-Withstand	1.6KV		

IEC 技术参数 IEC Technical Data				
过电压类别	Overvoltage Category	Ⅲ	Ⅲ	Ⅱ
污染等级	Contamination Class	3	2	2
额定电压	Rated Voltage [V]	250	320	630
额定电流	Rated Current [A]	20	20	20
额定冲击电压	Impulse withstand voltage [KV]	4	4	4
导线截面积 Conductor cross section	硬质导线 Solid[mm²]	0.2~2.5		
	柔性导线 Flexible[mm²]	0.2~2.5		

材料 Material		
绝缘材料	Insulation Material	PA66
阻燃等级	Flame retardant rating	UL94V-0
导体材料	Conductor Material	Copper alloy
导体表面镀层	Plating of conductor surface	Sn plated

一般参数 Other Data		
间距/极数	Pitch/Poles [mm]/[P]	5.0,5.08/2~24
剥线长度	Stripping Length [mm]	7~8
螺丝/扭矩	Screw/Torque(Max)[N.m]	M3/0.5
工作温度	Operating temperature[℃]	-40~+105
焊锡温度	Soldering temperature	/
引针尺寸	Pin dimensions [mm]	/
PCB板孔径	PCB Hole Diameter [mm]	/

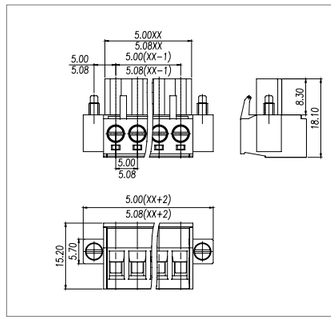



Pitch:5.0mm

WJ2EDGKJ-5.08

UL/CUL 技术参数 UL/CUL Technical Data				
等级	Use Group	B	C	D
额定电压	Rated Voltage [V]	300	-	-
额定电流	Rated Current [A]	18	-	-
接线范围 Wire Range	单芯线 Solid [AWG]	30~12		
	多芯线 Stranded [AWG]	30~12		
耐电压	Dielectric Voltage-Withstand	1.6KV		

IEC 技术参数 IEC Technical Data				
过电压类别	Overvoltage Category	Ⅲ	Ⅲ	Ⅱ
污染等级	Contamination Class	3	2	2
额定电压	Rated Voltage [V]	250	320	630
额定电流	Rated Current [A]	15	15	15
额定冲击电压	Impulse withstand voltage [KV]	4	4	4
导线截面积 Conductor cross section	硬质导线 Solid[mm²]	0.2~2.5		
	柔性导线 Flexible[mm²]	0.2~2.5		

材料 Material		
绝缘材料	Insulation Material	PA66
阻燃等级	Flame retardant rating	UL94V-0
导体材料	Conductor Material	Copper alloy
导体表面镀层	Plating of conductor surface	Sn plated

一般参数 Other Data		
间距/极数	Pitch/Poles [mm]/[P]	5.08/2~24
剥线长度	Stripping Length [mm]	7~8
螺丝/扭矩	Screw/Torque(Max)[N.m]	M3/0.5
工作温度	Operating temperature[℃]	-40~+105
焊锡温度	Soldering temperature	/
引针尺寸	Pin dimensions [mm]	/
PCB板孔径	PCB Hole Diameter [mm]	/

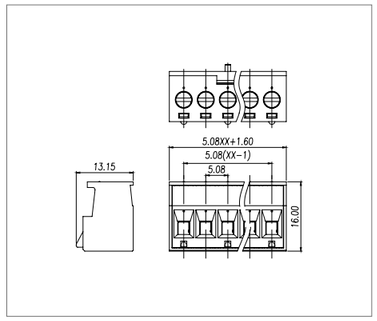



Pitch:5.0/5.08mm

WJ2EDGKZ-5.0/5.08

UL/CUL 技术参数 UL/CUL Technical Data				
等级	Use Group	B	C	D
额定电压	Rated Voltage [V]	300	-	300
额定电流	Rated Current [A]	15	-	10
接线范围 Wire Range	单芯线 Solid [AWG]	28~12		
	多芯线 Stranded [AWG]	28~12		
耐电压	Dielectric Voltage-Withstand	1.6KV		

IEC 技术参数 IEC Technical Data				
过电压类别	Overvoltage Category	Ⅲ	Ⅲ	Ⅱ
污染等级	Contamination Class	3	2	2
额定电压	Rated Voltage [V]	250	320	630
额定电流	Rated Current [A]	10	10	10
额定冲击电压	Impulse withstand voltage [KV]	4	4	4
导线截面积 Conductor cross section	硬质导线 Solid[mm²]	0.2~2.5		
	柔性导线 Flexible[mm²]	0.2~2.5		

材料 Material		
绝缘材料	Insulation Material	PA66
阻燃等级	Flame retardant rating	UL94V-0
导体材料	Conductor Material	Copper alloy
导体表面镀层	Plating of conductor surface	Ni plated

一般参数 Other Data		
间距/极数	Pitch/Poles [mm]/[P]	5.0,5.08/2~24
剥线长度	Stripping Length [mm]	7~8
螺丝/扭矩	Screw/Torque(Max)[N.m]	M3/0.5
工作温度	Operating temperature[℃]	-40~+105
焊锡温度	Soldering temperature	/
引针尺寸	Pin dimensions [mm]	/
PCB板孔径	PCB Hole Diameter [mm]	/

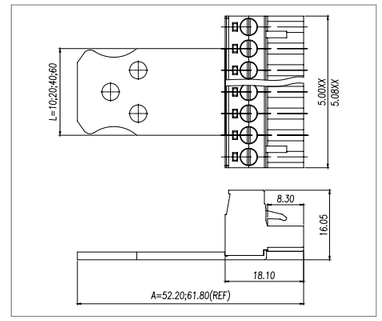



Pitch:5.0/5.08mm

WJ2EDGKZM-5.0/5.08

UL/CUL 技术参数 UL/CUL Technical Data				
等级	Use Group	B	C	D
额定电压	Rated Voltage [V]	300	-	300
额定电流	Rated Current [A]	15	-	10
接线范围 Wire Range	单芯线 Solid [AWG]	28~12		
	多芯线 Stranded [AWG]	28~12		
耐电压	Dielectric Voltage-Withstand	1.6KV		

IEC 技术参数 IEC Technical Data				
过电压类别	Overvoltage Category	Ⅲ	Ⅲ	Ⅱ
污染等级	Contamination Class	3	2	2
额定电压	Rated Voltage [V]	250	320	630
额定电流	Rated Current [A]	10	10	10
额定冲击电压	Impulse withstand voltage [KV]	4	4	4
导线截面积 Conductor cross section	硬质导线 Solid[mm²]	0.2~2.5		
	柔性导线 Flexible[mm²]	0.2~2.5		

材料 Material		
绝缘材料	Insulation Material	PA66
阻燃等级	Flame retardant rating	UL94V-0
导体材料	Conductor Material	Copper alloy
导体表面镀层	Plating of conductor surface	Ni plated

一般参数 Other Data		
间距/极数	Pitch/Poles [mm]/[P]	5.0,5.08/2~24
剥线长度	Stripping Length [mm]	7~8
螺丝/扭矩	Screw/Torque(Max)[N.m]	M3/0.5
工作温度	Operating temperature[℃]	-40~+105
焊锡温度	Soldering temperature	/
引针尺寸	Pin dimensions [mm]	/
PCB板孔径	PCB Hole Diameter [mm]	/

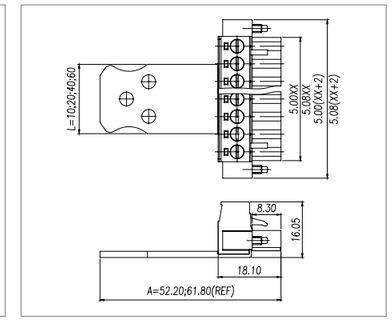

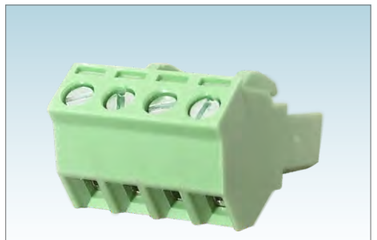

Pitch:3.81mm

WJ2EDGKL-3.81

UL/CUL 技术参数 UL/CUL Technical Data				
等级	Use Group	B	C	D
额定电压	Rated Voltage [V]	300	-	300
额定电流	Rated Current [A]	8	-	8
接线范围 Wire Range	单芯线 Solid [AWG]	28~16		
	多芯线 Stranded [AWG]	28~16		
耐电压	Dielectric Voltage-Withstand	1.6KV		
IEC 技术参数 IEC Technical Data				
过电压类别	Surge voltage category	Ⅲ	Ⅲ	Ⅱ
污染等级	Contamination Class	3	2	2
额定电压	Rated Voltage [V]	160	160	250
额定电流	Rated Current [A]	7	7	7
额定冲击电压	Impulse withstand voltage [KV]	2.5	2.5	2.5
导线截面积 Conductor cross section	硬质导线 Solid[mm²]	0.2~1.5		
	柔性导线 Flexible[mm²]	0.2~1.5		
材料 Material				
绝缘材料	Insulation Material	PA66		
阻燃等级	Inflammability Class	UL94V-0		
导体材料	Conductor Material	Copper alloy		
导体表面镀层	Conductor Plating	Sn plated		
一般参数 Other Data				
间距/极数	Pitch/Poles [mm]/[P]	3.81/2-24		
剥线长度	Stripping Length [mm]	6-7		
螺丝/扭矩	Screw/Torque(Max)[N.m]	M2/0.2		
工作温度	Operating temperature[℃]	-40~+105		
焊锡温度	Soldering temperature	/		
引针尺寸	Pin dimensions [mm]	/		
PCB板孔径	PCB Hole Diameter [mm]	/		

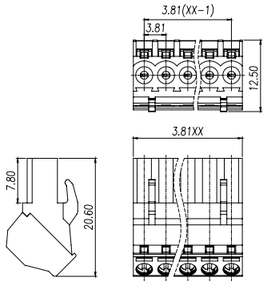

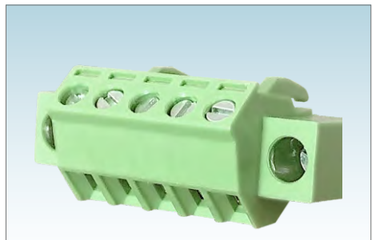

Pitch:3.81mm

WJ2EDGKLM-3.81

UL/CUL 技术参数 UL/CUL Technical Data				
等级	Use Group	B	C	D
额定电压	Rated Voltage [V]	300	-	300
额定电流	Rated Current [A]	8	-	8
接线范围 Wire Range	单芯线 Solid [AWG]	28~16		
	多芯线 Stranded [AWG]	28~16		
耐电压	Dielectric Voltage-Withstand	1.6KV		
IEC 技术参数 IEC Technical Data				
过电压类别	Surge voltage category	Ⅲ	Ⅲ	Ⅱ
污染等级	Contamination Class	3	2	2
额定电压	Rated Voltage [V]	160	160	250
额定电流	Rated Current [A]	7	7	7
额定冲击电压	Impulse withstand voltage [KV]	2.5	2.5	2.5
导线截面积 Conductor cross section	硬质导线 Solid[mm²]	0.2~1.5		
	柔性导线 Flexible[mm²]	0.2~1.5		
材料 Material				
绝缘材料	Insulation Material	PA66		
阻燃等级	Inflammability Class	UL94V-0		
导体材料	Conductor Material	Copper alloy		
导体表面镀层	Conductor Plating	Sn plated		
一般参数 Other Data				
间距/极数	Pitch/Poles [mm]/[P]	3.81/2-24		
剥线长度	Stripping Length [mm]	6-7		
螺丝/扭矩	Screw/Torque(Max)[N.m]	M2/0.2		
工作温度	Operating temperature[℃]	-40~+105		
焊锡温度	Soldering temperature	/		
引针尺寸	Pin dimensions [mm]	/		
PCB板孔径	PCB Hole Diameter [mm]	/		

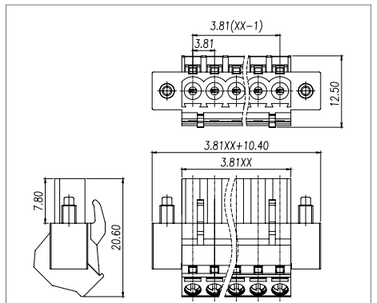

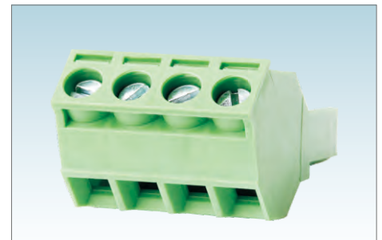

Pitch:5.08mm

WJ2EDGKL-5.08

UL/CUL 技术参数 UL/CUL Technical Data				
等级	Use Group	B	C	D
额定电压	Rated Voltage [V]	300	-	300
额定电流	Rated Current [A]	15	-	10
接线范围 Wire Range	单芯线 Solid [AWG]	28~12		
	多芯线 Stranded [AWG]	28~12		
耐电压	Dielectric Voltage-Withstand	1.6KV		
IEC 技术参数 IEC Technical Data				
过电压类别	Overvoltage Category	Ⅲ	Ⅲ	Ⅱ
污染等级	Contamination Class	3	2	2
额定电压	Rated Voltage [V]	250	320	630
额定电流	Rated Current [A]	15	15	15
额定冲击电压	Impulse withstand voltage [KV]	4	4	4
导线截面积 Conductor cross section	硬质导线 Solid[mm²]	0.2~2.5		
	柔性导线 Flexible[mm²]	0.2~2.5		
材料 Material				
绝缘材料	Insulation Material	PA66		
阻燃等级	Flame retardant rating	UL94V-0		
导体材料	Conductor Material	Copper alloy		
导体表面镀层	Plating of conductor surface	Sn plated		
一般参数 Other Data				
间距/极数	Pitch/Poles [mm]/[P]	5.08/2~24		
剥线长度	Stripping Length [mm]	7~8		
螺丝/扭矩	Screw/Torque(Max)[N.m]	M3/0.5		
工作温度	Operating temperature[℃]	-40~+105		
焊锡温度	Soldering temperature	/		
引针尺寸	Pin dimensions [mm]	/		
PCB板孔径	PCB Hole Diameter [mm]	/		

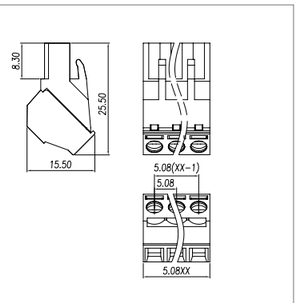



Pitch:5.08mm

WJ2EDGKLM-5.08

UL/CUL 技术参数 UL/CUL Technical Data				
等级	Use Group	B	C	D
额定电压	Rated Voltage [V]	300	-	300
额定电流	Rated Current [A]	15	-	10
接线范围 Wire Range	单芯线 Solid [AWG]	28~12		
	多芯线 Stranded [AWG]	28~12		
耐电压	Dielectric Voltage-Withstand	1.6KV		
IEC 技术参数 IEC Technical Data				
过电压类别	Overvoltage Category	Ⅲ	Ⅲ	Ⅱ
污染等级	Contamination Class	3	2	2
额定电压	Rated Voltage [V]	250	320	630
额定电流	Rated Current [A]	15	15	15
额定冲击电压	Impulse withstand voltage [KV]	4	4	4
导线截面积 Conductor cross section	硬质导线 Solid[mm²]	0.2~2.5		
	柔性导线 Flexible[mm²]	0.2~2.5		
材料 Material				
绝缘材料	Insulation Material	PA66		
阻燃等级	Flame retardant rating	UL94V-0		
导体材料	Conductor Material	Copper alloy		
导体表面镀层	Plating of conductor surface	Sn plated		
一般参数 Other Data				
间距/极数	Pitch/Poles [mm]/[P]	5.08/2~24		
剥线长度	Stripping Length [mm]	7~8		
螺丝/扭矩	Screw/Torque(Max)[N.m]	M3/0.5		
工作温度	Operating temperature[℃]	-40~+105		
焊锡温度	Soldering temperature	/		
引针尺寸	Pin dimensions [mm]	/		
PCB板孔径	PCB Hole Diameter [mm]	/		

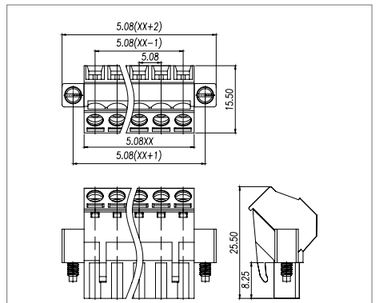



Pitch:5.0/5.08mm

WJ2EDGKN-5.0/5.08

UL/CUL 技术参数 UL/CUL Technical Data				
等级	Use Group	B	C	D
额定电压	Rated Voltage [V]	300	-	300
额定电流	Rated Current [A]	12	-	10
接线范围 Wire Range	单芯线 Solid [AWG]	24~16		
	多芯线 Stranded [AWG]	24~16		
耐电压	Dielectric Voltage-Withstand	1.6KV		
IEC 技术参数 IEC Technical Data				
过电压类别	Overvoltage Category	Ⅲ	Ⅲ	Ⅱ
污染等级	Contamination Class	3	2	2
额定电压	Rated Voltage [V]	320	320	630
额定电流	Rated Current [A]	12	12	12
额定冲击电压	Impulse withstand voltage [KV]	4	4	4
导线截面积 Conductor cross section	硬质导线 Solid[mm²]	0.2~1.5		
	柔性导线 Flexible[mm²]	0.2~2.5		
材料 Material				
绝缘材料	Insulation Material	PA66		
阻燃等级	Flame retardant rating	UL94V-0		
导体材料	Conductor Material	Copper alloy		
导体表面镀层	Plating of conductor surface	Sn plated		
一般参数 Other Data				
间距/极数	Pitch/Poles [mm]/[P]	5.0,5.08/2~24		
剥线长度	Stripping Length [mm]	11~12		
螺丝/扭矩	Screw/Torque(Max)[N.m]	/		
工作温度	Operating temperature[℃]	-40~+105		
焊锡温度	Soldering temperature	/		
引针尺寸	Pin dimensions [mm]	/		
PCB板孔径	PCB Hole Diameter [mm]	/		

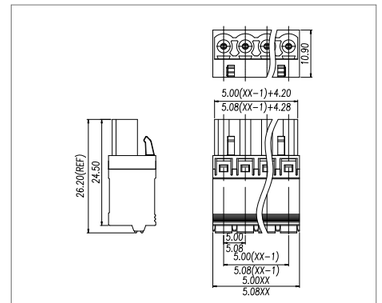



Pitch:5.0/5.08mm

WJ2EDGKNM-5.0/5.08

UL/CUL 技术参数 UL/CUL Technical Data				
等级	Use Group	B	C	D
额定电压	Rated Voltage [V]	300	-	300
额定电流	Rated Current [A]	12	-	10
接线范围 Wire Range	单芯线 Solid [AWG]	24~16		
	多芯线 Stranded [AWG]	24~16		
耐电压	Dielectric Voltage-Withstand	1.6KV		
IEC 技术参数 IEC Technical Data				
过电压类别	Overvoltage Category	Ⅲ	Ⅲ	Ⅱ
污染等级	Contamination Class	3	2	2
额定电压	Rated Voltage [V]	320	320	630
额定电流	Rated Current [A]	12	12	12
额定冲击电压	Impulse withstand voltage [KV]	4	4	4
导线截面积 Conductor cross section	硬质导线 Solid[mm²]	0.2~1.5		
	柔性导线 Flexible[mm²]	0.2~2.5		
材料 Material				
绝缘材料	Insulation Material	PA66		
阻燃等级	Flame retardant rating	UL94V-0		
导体材料	Conductor Material	Copper alloy		
导体表面镀层	Plating of conductor surface	Sn plated		
一般参数 Other Data				
间距/极数	Pitch/Poles [mm]/[P]	5.0,5.08/2~24		
剥线长度	Stripping Length [mm]	11~12		
螺丝/扭矩	Screw/Torque(Max)[N.m]	/		
工作温度	Operating temperature[℃]	-40~+105		
焊锡温度	Soldering temperature	/		
引针尺寸	Pin dimensions [mm]	/		
PCB板孔径	PCB Hole Diameter [mm]	/		

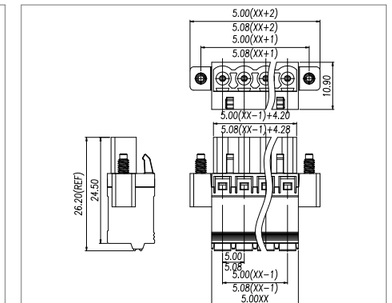



Pitch:5.0/5.08mm

WJ2EDGKNG-5.0/5.08

UL/CUL 技术参数 UL/CUL Technical Data				
等级	Use Group	B	C	D
额定电压	Rated Voltage [V]	300	-	300
额定电流	Rated Current [A]	12	-	10
接线范围 Wire Range	单芯线 Solid [AWG]	24~16		
	多芯线 Stranded [AWG]	24~16		
耐电压	Dielectric Voltage-Withstand	1.6KV		

IEC 技术参数 IEC Technical Data				
过电压类别	Overvoltage Category	Ⅲ	Ⅲ	Ⅱ
污染等级	Contamination Class	3	2	2
额定电压	Rated Voltage [V]	320	320	630
额定电流	Rated Current [A]	12	12	12
额定冲击电压	Impulse withstand voltage [KV]	4	4	4
导线截面积 Conductor cross section	硬质导线 Solid[mm²]	0.2~1.5		
	柔性导线 Flexible[mm²]	0.2~2.5		

材料 Material		
绝缘材料	Insulation Material	PA66
阻燃等级	Flame retardant rating	UL94V-0
导体材料	Conductor Material	Copper alloy
导体表面镀层	Plating of conductor surface	Sn plated

一般参数 Other Data		
间距/极数	Pitch/Poles [mm]/[P]	5.0,5.08/2~24
剥线长度	Stripping Length [mm]	11~12
螺丝/扭矩	Screw/Torque(Max)[N.m]	/
工作温度	Operating temperature[℃]	-40~+105
焊锡温度	Soldering temperature	/
引针尺寸	Pin dimensions [mm]	/
PCB板孔径	PCB Hole Diameter [mm]	/

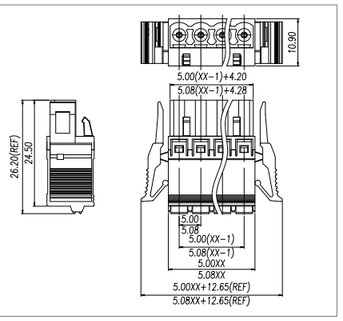

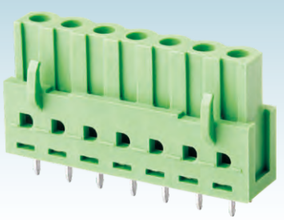

Pitch:5.0/5.08mm

WJ2EDGB-5.0/5.08

UL/CUL 技术参数 UL/CUL Technical Data				
等级	Use Group	B	C	D
额定电压	Rated Voltage [V]	300	-	300
额定电流	Rated Current [A]	15	-	10
接线范围 Wire Range	单芯线 Solid [AWG]	/		
	多芯线 Stranded [AWG]	/		
耐电压	Dielectric Voltage-Withstand	1.6KV		

IEC 技术参数 IEC Technical Data				
过电压类别	Overvoltage Category	Ⅲ	Ⅲ	Ⅱ
污染等级	Contamination Class	3	2	2
额定电压	Rated Voltage [V]	320	320	630
额定电流	Rated Current [A]	12	12	12
额定冲击电压	Impulse withstand voltage [KV]	4	4	4
导线截面积 Conductor cross section	硬质导线 Solid[mm²]	/		
	柔性导线 Flexible[mm²]	/		

材料 Material		
绝缘材料	Insulation Material	PA66
阻燃等级	Flame retardant rating	UL94V-0
导体材料	Conductor Material	Copper alloy
导体表面镀层	Plating of conductor surface	Sn plated

一般参数 Other Data		
间距/极数	Pitch/Poles [mm]/[P]	5.0,5.08/2~24
剥线长度	Stripping Length [mm]	/
螺丝/扭矩	Screw/Torque(Max)[N.m]	/
工作温度	Operating temperature[℃]	-40~+105
焊锡温度	Soldering temperature	260℃ /5S
引针尺寸	Pin dimensions [mm]	0.4*1.1
PCB板孔径	PCB Hole Diameter [mm]	∅1.4

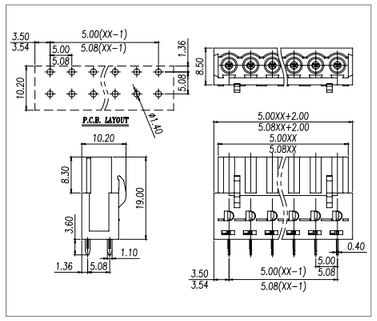

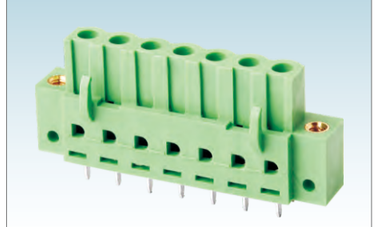

Pitch:5.0/5.08mm

WJ2EDGBM-5.0/5.08

UL/CUL 技术参数 UL/CUL Technical Data				
等级	Use Group	B	C	D
额定电压	Rated Voltage [V]	300	-	300
额定电流	Rated Current [A]	15	-	10
接线范围 Wire Range	单芯线 Solid [AWG]	/		
	多芯线 Stranded [AWG]	/		
耐电压	Dielectric Voltage-Withstand	1.6KV		

IEC 技术参数 IEC Technical Data				
过电压类别	Overvoltage Category	Ⅲ	Ⅲ	Ⅱ
污染等级	Contamination Class	3	2	2
额定电压	Rated Voltage [V]	320	320	630
额定电流	Rated Current [A]	12	12	12
额定冲击电压	Impulse withstand voltage [KV]	4	4	4
导线截面积 Conductor cross section	硬质导线 Solid[mm²]	/		
	柔性导线 Flexible[mm²]	/		

材料 Material		
绝缘材料	Insulation Material	PA66
阻燃等级	Flame retardant rating	UL94V-0
导体材料	Conductor Material	Copper alloy
导体表面镀层	Plating of conductor surface	Sn plated

一般参数 Other Data		
间距/极数	Pitch/Poles [mm]/[P]	5.0,5.08/2~24
剥线长度	Stripping Length [mm]	/
螺丝/扭矩	Screw/Torque(Max)[N.m]	/
工作温度	Operating temperature[℃]	-40~+105
焊锡温度	Soldering temperature	260℃ /5S
引针尺寸	Pin dimensions [mm]	0.4*1.1
PCB板孔径	PCB Hole Diameter [mm]	∅1.4

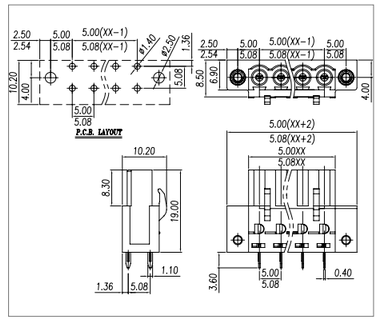

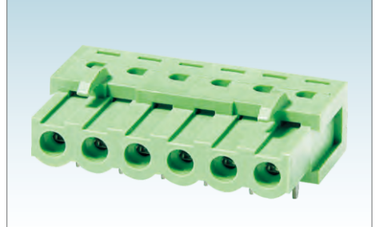

Pitch:5.0/5.08mm

WJ2EDGA-5.0/5.08

UL/CUL 技术参数 UL/CUL Technical Data				
等级	Use Group	B	C	D
额定电压	Rated Voltage [V]	300	-	300
额定电流	Rated Current [A]	15	-	10
接线范围 Wire Range	单芯线 Solid [AWG]	/		
	多芯线 Stranded [AWG]	/		
耐电压	Dielectric Voltage-Withstand	1.6KV		

IEC 技术参数 IEC Technical Data				
过电压类别	Overvoltage Category	Ⅲ	Ⅲ	Ⅱ
污染等级	Contamination Class	3	2	2
额定电压	Rated Voltage [V]	320	320	630
额定电流	Rated Current [A]	12	12	12
额定冲击电压	Impulse withstand voltage [KV]	4	4	4
导线截面积 Conductor cross section	硬质导线 Solid[mm²]	/		
	柔性导线 Flexible[mm²]	/		

材料 Material		
绝缘材料	Insulation Material	PA66
阻燃等级	Flame retardant rating	UL94V-0
导体材料	Conductor Material	Copper alloy
导体表面镀层	Plating of conductor surface	Sn plated

一般参数 Other Data		
间距/极数	Pitch/Poles [mm]/[P]	5.0,5.08/2~24
剥线长度	Stripping Length [mm]	/
螺丝/扭矩	Screw/Torque(Max)[N.m]	/
工作温度	Operating temperature[℃]	-40~+105
焊锡温度	Soldering temperature	260℃ /5S
引针尺寸	Pin dimensions [mm]	0.4*1.1
PCB板孔径	PCB Hole Diameter [mm]	∅1.4

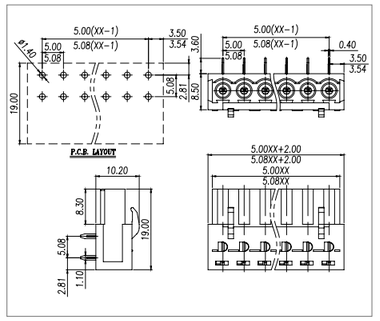

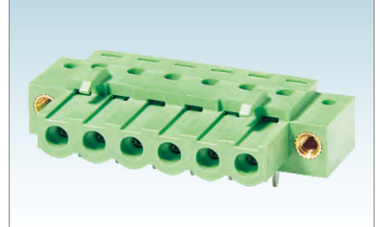

Pitch:5.0/5.08mm

WJ2EDGAM-5.0/5.08

UL/CUL 技术参数 UL/CUL Technical Data				
等级	Use Group	B	C	D
额定电压	Rated Voltage [V]	300	-	300
额定电流	Rated Current [A]	15	-	10
接线范围 Wire Range	单芯线 Solid [AWG]	/		
	多芯线 Stranded [AWG]	/		
耐电压	Dielectric Voltage-Withstand	1.6KV		

IEC 技术参数 IEC Technical Data				
过电压类别	Overvoltage Category	Ⅲ	Ⅲ	Ⅱ
污染等级	Contamination Class	3	2	2
额定电压	Rated Voltage [V]	320	320	630
额定电流	Rated Current [A]	12	12	12
额定冲击电压	Impulse withstand voltage [KV]	4	4	4
导线截面积 Conductor cross section	硬质导线 Solid[mm²]	/		
	柔性导线 Flexible[mm²]	/		

材料 Material		
绝缘材料	Insulation Material	PA66
阻燃等级	Flame retardant rating	UL94V-0
导体材料	Conductor Material	Copper alloy
导体表面镀层	Plating of conductor surface	Sn plated

一般参数 Other Data		
间距/极数	Pitch/Poles [mm]/[P]	5.0,5.08/2~24
剥线长度	Stripping Length [mm]	/
螺丝/扭矩	Screw/Torque(Max)[N.m]	/
工作温度	Operating temperature[℃]	-40~+105
焊锡温度	Soldering temperature	260℃ /5S
引针尺寸	Pin dimensions [mm]	0.4*1.1
PCB板孔径	PCB Hole Diameter [mm]	∅1.4

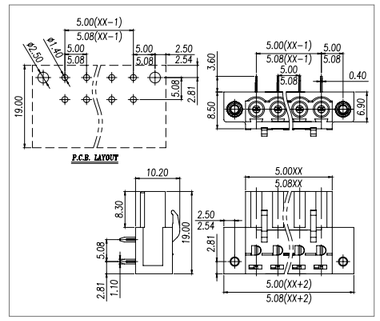

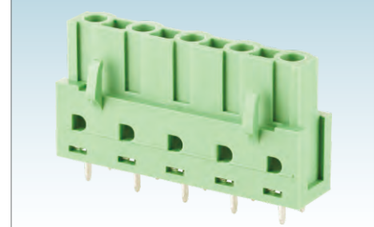

Pitch:7.62mm

WJ2EDGB-7.62

UL/CUL 技术参数 UL/CUL Technical Data				
等级	Use Group	B	C	D
额定电压	Rated Voltage [V]	300	-	300
额定电流	Rated Current [A]	15	-	10
接线范围 Wire Range	单芯线 Solid [AWG]	/		
	多芯线 Stranded [AWG]	/		
耐电压	Dielectric Voltage-Withstand	1.6KV		

IEC 技术参数 IEC Technical Data				
过电压类别	Overvoltage Category	Ⅲ	Ⅲ	Ⅱ
污染等级	Contamination Class	3	2	2
额定电压	Rated Voltage [V]	500	630	1000
额定电流	Rated Current [A]	12	12	12
额定冲击电压	Impulse withstand voltage [KV]	6	6	6
导线截面积 Conductor cross section	硬质导线 Solid[mm²]	/		
	柔性导线 Flexible[mm²]	/		

材料 Material		
绝缘材料	Insulation Material	PA66
阻燃等级	Flame retardant rating	UL94V-0
导体材料	Conductor Material	Copper alloy
导体表面镀层	Plating of conductor surface	Sn plated

一般参数 Other Data		
间距/极数	Pitch/Poles [mm]/[P]	7.62/2~16
剥线长度	Stripping Length [mm]	/
螺丝/扭矩	Screw/Torque(Max)[N.m]	/
工作温度	Operating temperature[℃]	-40~+105
焊锡温度	Soldering temperature	260℃ /5S
引针尺寸	Pin dimensions [mm]	0.4*1.1
PCB板孔径	PCB Hole Diameter [mm]	∅1.4

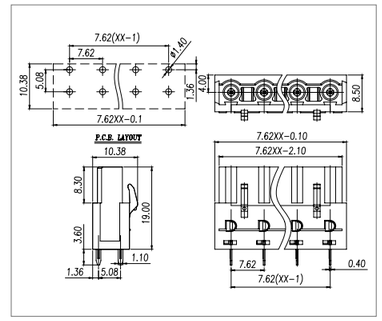

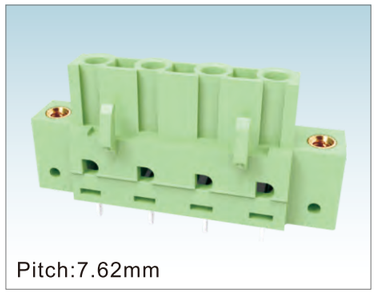

Pitch:7.62mm

WJ2EDGBM-7.62

UL/CUL 技术参数 UL/CUL Technical Data				
等级	Use Group	B	C	D
额定电压	Rated Voltage [V]	300	-	300
额定电流	Rated Current [A]	15	-	10
接线范围 Wire Range	单芯线 Solid [AWG]	/		
	多芯线 Stranded [AWG]	/		
耐电压	Dielectric Voltage-Withstand	1.6KV		

IEC 技术参数 IEC Technical Data				
过电压类别	Overvoltage Category	Ⅲ	Ⅲ	Ⅱ
污染等级	Contamination Class	3	2	2
额定电压	Rated Voltage [V]	500	630	1000
额定电流	Rated Current [A]	12	12	12
额定冲击电压	Impulse withstand voltage [KV]	6	6	6
导线截面积 Conductor cross section	硬质导线 Solid[mm²]	/		
	柔性导线 Flexible[mm²]	/		

材料 Material		
绝缘材料	Insulation Material	PA66
阻燃等级	Flame retardant rating	UL94V-0
导体材料	Conductor Material	Copper alloy
导体表面镀层	Plating of conductor surface	Sn plated

一般参数 Other Data		
间距/极数	Pitch/Poles [mm]/[P]	7.62/2~16
剥线长度	Stripping Length [mm]	/
螺丝/扭矩	Screw/Torque(Max)[N.m]	/
工作温度	Operating temperature[℃]	-40~+105
焊锡温度	Soldering temperature	260℃ /5S
引针尺寸	Pin dimensions [mm]	0.4*1.1
PCB板孔径	PCB Hole Diameter [mm]	∅1.4

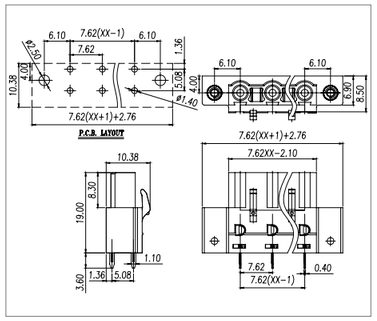

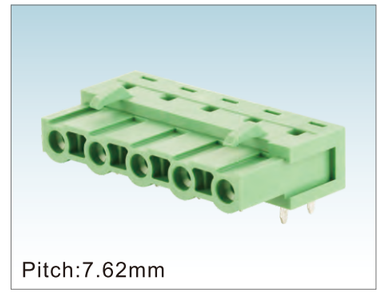

Pitch:7.62mm

WJ2EDGA-7.62

UL/CUL 技术参数 UL/CUL Technical Data				
等级	Use Group	B	C	D
额定电压	Rated Voltage [V]	300	-	300
额定电流	Rated Current [A]	15	-	10
接线范围 Wire Range	单芯线 Solid [AWG]	/		
	多芯线 Stranded [AWG]	/		
耐电压	Dielectric Voltage-Withstand	1.6KV		

IEC 技术参数 IEC Technical Data				
过电压类别	Overvoltage Category	Ⅲ	Ⅲ	Ⅱ
污染等级	Contamination Class	3	2	2
额定电压	Rated Voltage [V]	500	630	1000
额定电流	Rated Current [A]	12	12	12
额定冲击电压	Impulse withstand voltage [KV]	6	6	6
导线截面积 Conductor cross section	硬质导线 Solid[mm²]	/		
	柔性导线 Flexible[mm²]	/		

材料 Material		
绝缘材料	Insulation Material	PA66
阻燃等级	Flame retardant rating	UL94V-0
导体材料	Conductor Material	Copper alloy
导体表面镀层	Plating of conductor surface	Sn plated

一般参数 Other Data		
间距/极数	Pitch/Poles [mm]/[P]	7.62/2~16
剥线长度	Stripping Length [mm]	/
螺丝/扭矩	Screw/Torque(Max)[N.m]	/
工作温度	Operating temperature[℃]	-40~+105
焊锡温度	Soldering temperature	260℃ /5S
引针尺寸	Pin dimensions [mm]	0.4*1.1
PCB板孔径	PCB Hole Diameter [mm]	∅1.4

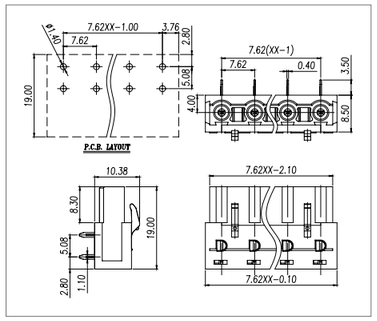

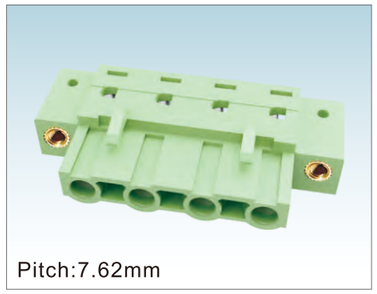

Pitch:7.62mm

WJ2EDGAM-7.62

UL/CUL 技术参数 UL/CUL Technical Data				
等级	Use Group	B	C	D
额定电压	Rated Voltage [V]	300	-	300
额定电流	Rated Current [A]	15	-	10
接线范围 Wire Range	单芯线 Solid [AWG]	/		
	多芯线 Stranded [AWG]	/		
耐电压	Dielectric Voltage-Withstand	1.6KV		

IEC 技术参数 IEC Technical Data				
过电压类别	Overvoltage Category	Ⅲ	Ⅲ	Ⅱ
污染等级	Contamination Class	3	2	2
额定电压	Rated Voltage [V]	500	630	1000
额定电流	Rated Current [A]	12	12	12
额定冲击电压	Impulse withstand voltage [KV]	6	6	6
导线截面积 Conductor cross section	硬质导线 Solid[mm²]	/		
	柔性导线 Flexible[mm²]	/		

材料 Material		
绝缘材料	Insulation Material	PA66
阻燃等级	Flame retardant rating	UL94V-0
导体材料	Conductor Material	Copper alloy
导体表面镀层	Plating of conductor surface	Sn plated

一般参数 Other Data		
间距/极数	Pitch/Poles [mm]/[P]	7.62/2~16
剥线长度	Stripping Length [mm]	/
螺丝/扭矩	Screw/Torque(Max)[N.m]	/
工作温度	Operating temperature[℃]	-40~+105
焊锡温度	Soldering temperature	260℃ /5S
引针尺寸	Pin dimensions [mm]	0.4*1.1
PCB板孔径	PCB Hole Diameter [mm]	∅1.4

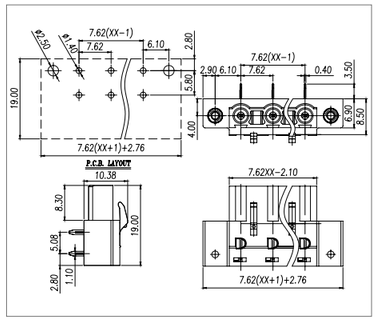

ISO14001 ISO45001 ISO9001 ISO80079-34 ISO/TS 22163

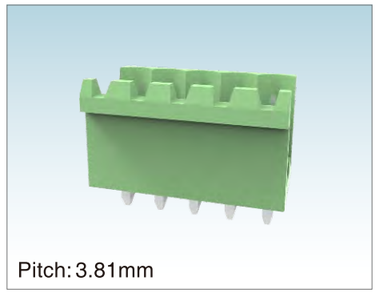

Pitch: 3.81mm

WJ2EDGV-3.81

UL/CUL 技术参数 UL/CUL Technical Data				
等级	Use Group	B	C	D
额定电压	Rated Voltage [V]	300	-	300
额定电流	Rated Current [A]	8	-	8
接线范围 Wire Range	单芯线 Solid [AWG]	/		
	多芯线 Stranded [AWG]	/		
耐电压	Dielectric Voltage-Withstand	1.6KV		

IEC 技术参数 IEC Technical Data				
过电压类别	Surge voltage category	Ⅲ	Ⅲ	Ⅱ
污染等级	Contamination Class	3	2	2
额定电压	Rated Voltage [V]	160	160	250
额定电流	Rated Current [A]	7	7	7
额定冲击电压	Impulse withstand voltage [KV]	2.5	2.5	2.5
导线截面积 Conductor cross section	硬质导线 Solid[mm²]	/		
	柔性导线 Flexible[mm²]	/		

材料 Material		
绝缘材料	Insulation Material	PA66
阻燃等级	Inflammability Class	UL94V-0
导体材料	Conductor Material	Copper alloy
导体表面镀层	Conductor Plating	Sn plated

一般参数 Other Data		
间距/极数	Pitch/Poles [mm]/[P]	3.81/2-24
剥线长度	Stripping Length [mm]	/
螺丝/扭矩	Screw/Torque(Max)[N.m]	/
工作温度	Operating temperature[℃]	-40~+105
焊锡温度	Soldering temperature	260℃/5S
引针尺寸	Pin dimensions [mm]	1.0*1.0
PCB板孔径	PCB Hole Diameter [mm]	∅1.7

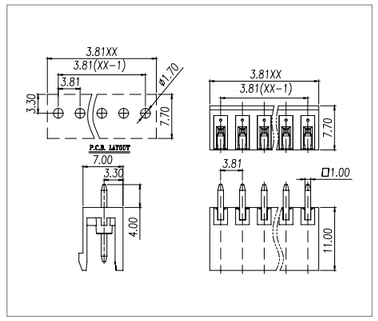

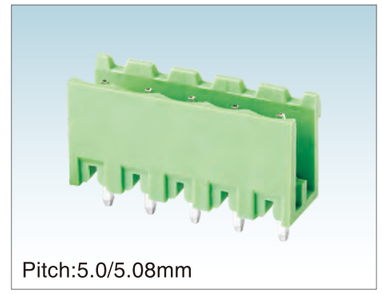

Pitch:5.0/5.08mm

WJ2EDGV-5.0/5.08

UL/CUL 技术参数 UL/CUL Technical Data				
等级	Use Group	B	C	D
额定电压	Rated Voltage [V]	300	-	300
额定电流	Rated Current [A]	15	-	10
接线范围 Wire Range	单芯线 Solid [AWG]	/		
	多芯线 Stranded [AWG]	/		
耐电压	Dielectric Voltage-Withstand	1.6KV		

IEC 技术参数 IEC Technical Data				
过电压类别	Overvoltage Category	Ⅲ	Ⅲ	Ⅱ
污染等级	Contamination Class	3	2	2
额定电压	Rated Voltage [V]	250	320	630
额定电流	Rated Current [A]	15	15	15
额定冲击电压	Impulse withstand voltage [KV]	4	4	4
导线截面积 Conductor cross section	硬质导线 Solid[mm²]	/		
	柔性导线 Flexible[mm²]	/		

材料 Material		
绝缘材料	Insulation Material	PA66
阻燃等级	Flame retardant rating	UL94V-0
导体材料	Conductor Material	Copper alloy
导体表面镀层	Plating of conductor surface	Sn plated

一般参数 Other Data		
间距/极数	Pitch/Poles [mm]/[P]	5.0,5.08/2~24
剥线长度	Stripping Length [mm]	/
螺丝/扭矩	Screw/Torque(Max)[N.m]	/
工作温度	Operating temperature[℃]	-40~+105
焊锡温度	Soldering temperature	260℃ /5S
引针尺寸	Pin dimensions [mm]	1.0*1.0
PCB板孔径	PCB Hole Diameter [mm]	∅1.7

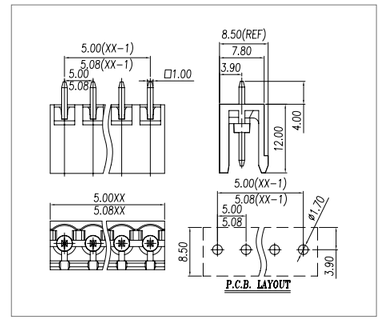

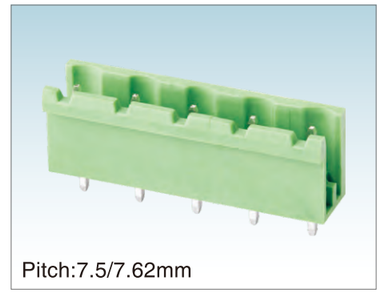

Pitch:7.5/7.62mm

WJ2EDGV-7.5/7.62

UL/CUL 技术参数 UL/CUL Technical Data				
等级	Use Group	B	C	D
额定电压	Rated Voltage [V]	300	-	300
额定电流	Rated Current [A]	15	-	10
接线范围 Wire Range	单芯线 Solid [AWG]	/		
	多芯线 Stranded [AWG]	/		
耐电压	Dielectric Voltage-Withstand	1.6KV		

IEC 技术参数 IEC Technical Data				
过电压类别	Overvoltage Category	Ⅲ	Ⅲ	Ⅱ
污染等级	Contamination Class	3	2	2
额定电压	Rated Voltage [V]	400	630	630
额定电流	Rated Current [A]	15	15	15
额定冲击电压	Impulse withstand voltage [KV]	6	6	6
导线截面积 Conductor cross section	硬质导线 Solid[mm²]	/		
	柔性导线 Flexible[mm²]	/		

材料 Material		
绝缘材料	Insulation Material	PA66
阻燃等级	Flame retardant rating	UL94V-0
导体材料	Conductor Material	Copper alloy
导体表面镀层	Plating of conductor surface	Sn plated

一般参数 Other Data		
间距/极数	Pitch/Poles [mm]/[P]	7.5,7.62/2~24
剥线长度	Stripping Length [mm]	/
螺丝/扭矩	Screw/Torque(Max)[N.m]	/
工作温度	Operating temperature[℃]	-40~+105
焊锡温度	Soldering temperature	260℃ /5S
引针尺寸	Pin dimensions [mm]	1.0*1.0
PCB板孔径	PCB Hole Diameter [mm]	∅1.7

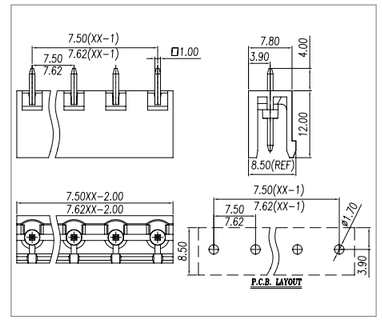

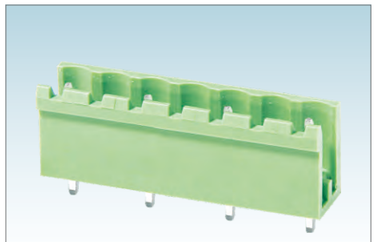

Pitch:10.0/10.16mm

WJ2EDGV-10.0/10.16

UL/CUL 技术参数 UL/CUL Technical Data				
等级	Use Group	B	C	D
额定电压	Rated Voltage [V]	600	-	600
额定电流	Rated Current [A]	15	-	5
接线范围 Wire Range	单芯线 Solid [AWG]	/		
	多芯线 Stranded [AWG]	/		
耐电压	Dielectric Voltage-Withstand	2.2KV		
IEC 技术参数 IEC Technical Data				
过电压类别	Overvoltage Category	Ⅲ	Ⅲ	Ⅱ
污染等级	Contamination Class	3	2	2
额定电压	Rated Voltage [V]	630	1000	1000
额定电流	Rated Current [A]	10	10	10
额定冲击电压	Impulse withstand voltage [KV]	6	6	6
导线截面积 Conductor cross section	硬质导线 Solid[mm²]	/		
	柔性导线 Flexible[mm²]	/		
材料 Material				
绝缘材料	Insulation Material	PA66		
阻燃等级	Flame retardant rating	UL94V-0		
导体材料	Conductor Material	Copper alloy		
导体表面镀层	Plating of conductor surface	Sn plated		
一般参数 Other Data				
间距/极数	Pitch/Poles [mm]/[P]	10.0,10.16/2~12		
剥线长度	Stripping Length [mm]	/		
螺丝/扭矩	Screw/Torque(Max)[N.m]	/		
工作温度	Operating temperature[℃]	-40~+105		
焊锡温度	Soldering temperature	260℃ /5S		
引针尺寸	Pin dimensions [mm]	1.0*1.0		
PCB板孔径	PCB Hole Diameter [mm]	∅1.7		

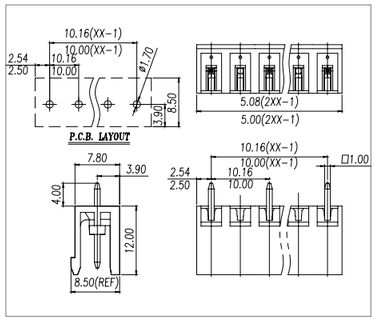

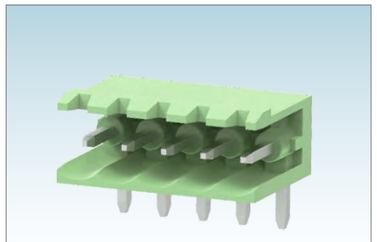

Pitch:3.81mm

WJ2EDGR-3.81

UL/CUL 技术参数 UL/CUL Technical Data				
等级	Use Group	B	C	D
额定电压	Rated Voltage [V]	300	-	300
额定电流	Rated Current [A]	8	-	8
接线范围 Wire Range	单芯线 Solid [AWG]	/		
	多芯线 Stranded [AWG]	/		
耐电压	Dielectric Voltage-Withstand	1.6KV		
IEC 技术参数 IEC Technical Data				
过电压类别	Surge voltage category	Ⅲ	Ⅲ	Ⅱ
污染等级	Contamination Class	3	2	2
额定电压	Rated Voltage [V]	160	160	250
额定电流	Rated Current [A]	7	7	7
额定冲击电压	Impulse withstand voltage [KV]	2.5	2.5	2.5
导线截面积 Conductor cross section	硬质导线 Solid[mm²]	/		
	柔性导线 Flexible[mm²]	/		
材料 Material				
绝缘材料	Insulation Material	PA66		
阻燃等级	Inflammability Class	UL94V-0		
导体材料	Conductor Material	Copper alloy		
导体表面镀层	Conductor Plating	Sn plated		
一般参数 Other Data				
间距/极数	Pitch/Poles [mm]/[P]	3.81/2-24		
剥线长度	Stripping Length [mm]	/		
螺丝/扭矩	Screw/Torque(Max)[N.m]	/		
工作温度	Operating temperature[℃]	-40~+105		
焊锡温度	Soldering temperature	260℃/5S		
引针尺寸	Pin dimensions [mm]	1.0*1.0		
PCB板孔径	PCB Hole Diameter [mm]	∅1.7		

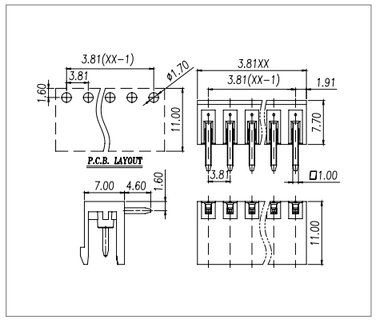

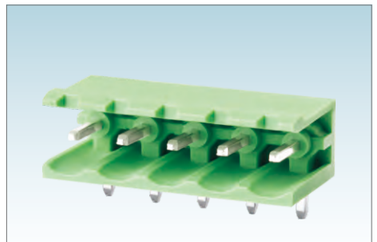

Pitch:5.0/5.08mm

WJ2EDGR-5.0/5.08

UL/CUL 技术参数 UL/CUL Technical Data				
等级	Use Group	B	C	D
额定电压	Rated Voltage [V]	300	-	300
额定电流	Rated Current [A]	15	-	10
接线范围 Wire Range	单芯线 Solid [AWG]	/		
	多芯线 Stranded [AWG]	/		
耐电压	Dielectric Voltage-Withstand	1.6KV		
IEC 技术参数 IEC Technical Data				
过电压类别	Overvoltage Category	Ⅲ	Ⅲ	Ⅱ
污染等级	Contamination Class	3	2	2
额定电压	Rated Voltage [V]	250	320	630
额定电流	Rated Current [A]	15	15	15
额定冲击电压	Impulse withstand voltage [KV]	4	4	4
导线截面积 Conductor cross section	硬质导线 Solid[mm²]	/		
	柔性导线 Flexible[mm²]	/		
材料 Material				
绝缘材料	Insulation Material	PA66		
阻燃等级	Flame retardant rating	UL94V-0		
导体材料	Conductor Material	Copper alloy		
导体表面镀层	Plating of conductor surface	Sn plated		
一般参数 Other Data				
间距/极数	Pitch/Poles [mm]/[P]	5.0,5.08/2~24		
剥线长度	Stripping Length [mm]	/		
螺丝/扭矩	Screw/Torque(Max)[N.m]	/		
工作温度	Operating temperature[℃]	-40~+105		
焊锡温度	Soldering temperature	260℃ /5S		
引针尺寸	Pin dimensions [mm]	1.0*1.0		
PCB板孔径	PCB Hole Diameter [mm]	∅1.7		

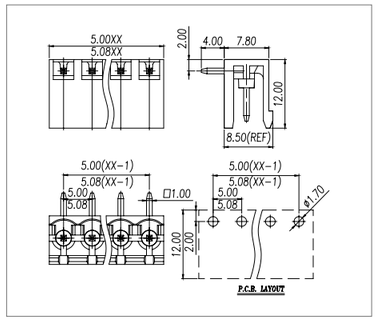

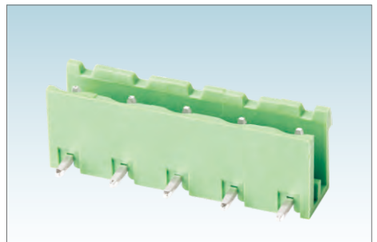

Pitch:7.5/7.62mm

WJ2EDGR-7.5/7.62

UL/CUL 技术参数 UL/CUL Technical Data				
等级	Use Group	B	C	D
额定电压	Rated Voltage [V]	300	-	300
额定电流	Rated Current [A]	15	-	10
接线范围 Wire Range	单芯线 Solid [AWG]	/		
	多芯线 Stranded [AWG]	/		
耐电压	Dielectric Voltage-Withstand	1.6KV		
IEC 技术参数 IEC Technical Data				
过电压类别	Overvoltage Category	Ⅲ	Ⅲ	Ⅱ
污染等级	Contamination Class	3	2	2
额定电压	Rated Voltage [V]	400	630	630
额定电流	Rated Current [A]	15	15	15
额定冲击电压	Impulse withstand voltage [KV]	6	6	6
导线截面积 Conductor cross section	硬质导线 Solid[mm²]	/		
	柔性导线 Flexible[mm²]	/		
材料 Material				
绝缘材料	Insulation Material	PA66		
阻燃等级	Flame retardant rating	UL94V-0		
导体材料	Conductor Material	Copper alloy		
导体表面镀层	Plating of conductor surface	Sn plated		
一般参数 Other Data				
间距/极数	Pitch/Poles [mm]/[P]	7.5,7.62/2~24		
剥线长度	Stripping Length [mm]	/		
螺丝/扭矩	Screw/Torque(Max)[N.m]	/		
工作温度	Operating temperature[℃]	-40~+105		
焊锡温度	Soldering temperature	260℃ /5S		
引针尺寸	Pin dimensions [mm]	1.0*1.0		
PCB板孔径	PCB Hole Diameter [mm]	∅1.7		

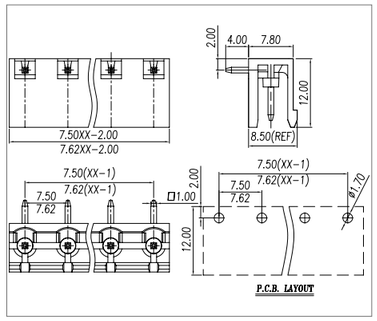

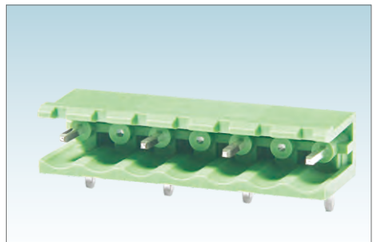

Pitch:10.0/10.16mm

WJ2EDGR-10.0/10.16

UL/CUL 技术参数 UL/CUL Technical Data				
等级	Use Group	B	C	D
额定电压	Rated Voltage [V]	600	-	600
额定电流	Rated Current [A]	15	-	5
接线范围 Wire Range	单芯线 Solid [AWG]	/		
	多芯线 Stranded [AWG]	/		
耐电压	Dielectric Voltage-Withstand	2.2KV		
IEC 技术参数 IEC Technical Data				
过电压类别	Overvoltage Category	Ⅲ	Ⅲ	Ⅱ
污染等级	Contamination Class	3	2	2
额定电压	Rated Voltage [V]	630	1000	1000
额定电流	Rated Current [A]	10	10	10
额定冲击电压	Impulse withstand voltage [KV]	6	6	6
导线截面积 Conductor cross section	硬质导线 Solid[mm²]	/		
	柔性导线 Flexible[mm²]	/		
材料 Material				
绝缘材料	Insulation Material	PA66		
阻燃等级	Flame retardant rating	UL94V-0		
导体材料	Conductor Material	Copper alloy		
导体表面镀层	Plating of conductor surface	Sn plated		
一般参数 Other Data				
间距/极数	Pitch/Poles [mm]/[P]	10.0,10.16/2~12		
剥线长度	Stripping Length [mm]	/		
螺丝/扭矩	Screw/Torque(Max)[N.m]	/		
工作温度	Operating temperature[℃]	-40~+105		
焊锡温度	Soldering temperature	260℃ /5S		
引针尺寸	Pin dimensions [mm]	1.0*1.0		
PCB板孔径	PCB Hole Diameter [mm]	∅1.7		

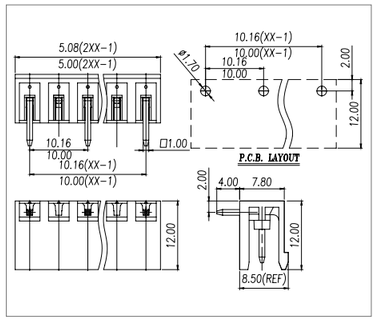

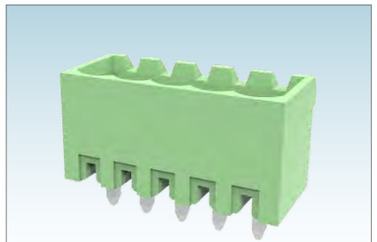

Pitch:3.81mm

WJ2EDGVC-3.81

UL/CUL 技术参数 UL/CUL Technical Data				
等级	Use Group	B	C	D
额定电压	Rated Voltage [V]	300	-	300
额定电流	Rated Current [A]	8	-	8
接线范围 Wire Range	单芯线 Solid [AWG]	/		
	多芯线 Stranded [AWG]	/		
耐电压	Dielectric Voltage-Withstand	1.6KV		
IEC 技术参数 IEC Technical Data				
过电压类别	Surge voltage category	Ⅲ	Ⅲ	Ⅱ
污染等级	Contamination Class	3	2	2
额定电压	Rated Voltage [V]	160	160	250
额定电流	Rated Current [A]	7	7	7
额定冲击电压	Impulse withstand voltage [KV]	2.5	2.5	2.5
导线截面积 Conductor cross section	硬质导线 Solid[mm²]	/		
	柔性导线 Flexible[mm²]	/		
材料 Material				
绝缘材料	Insulation Material	PA66		
阻燃等级	Inflammability Class	UL94V-0		
导体材料	Conductor Material	Copper alloy		
导体表面镀层	Conductor Plating	Sn plated		
一般参数 Other Data				
间距/极数	Pitch/Poles [mm]/[P]	3.81/2-24		
剥线长度	Stripping Length [mm]	/		
螺丝/扭矩	Screw/Torque(Max)[N.m]	/		
工作温度	Operating temperature[℃]	-40~+105		
焊锡温度	Soldering temperature	260℃/5S		
引针尺寸	Pin dimensions [mm]	1.0*1.0		
PCB板孔径	PCB Hole Diameter [mm]	∅1.7		

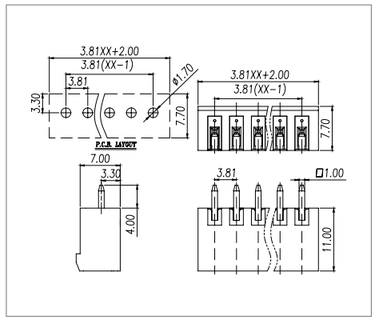

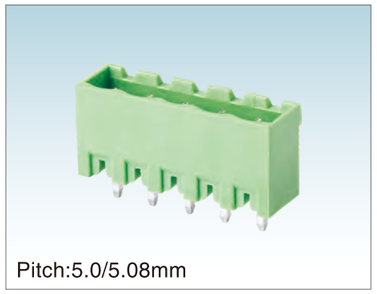

Pitch:5.0/5.08mm

WJ2EDGVC-5.0/5.08

UL/CUL 技术参数 UL/CUL Technical Data				
等级	Use Group	B	C	D
额定电压	Rated Voltage [V]	300	-	300
额定电流	Rated Current [A]	15	-	10
接线范围 Wire Range	单芯线 Solid [AWG]	/		
	多芯线 Stranded [AWG]	/		
耐电压	Dielectric Voltage-Withstand	1.6KV		
IEC 技术参数 IEC Technical Data				
过电压类别	Overvoltage Category	Ⅲ	Ⅲ	Ⅱ
污染等级	Contamination Class	3	2	2
额定电压	Rated Voltage [V]	250	320	630
额定电流	Rated Current [A]	15	15	15
额定冲击电压	Impulse withstand voltage [KV]	4	4	4
导线截面积 Conductor cross section	硬质导线 Solid[mm²]	/		
	柔性导线 Flexible[mm²]	/		
材料 Material				
绝缘材料	Insulation Material	PA66		
阻燃等级	Flame retardant rating	UL94V-0		
导体材料	Conductor Material	Copper alloy		
导体表面镀层	Plating of conductor surface	Sn plated		
一般参数 Other Data				
间距/极数	Pitch/Poles [mm]/[P]	5.0,5.08/2~24		
剥线长度	Stripping Length [mm]	/		
螺丝/扭矩	Screw/Torque(Max)[N.m]	/		
工作温度	Operating temperature[℃]	-40~+105		
焊锡温度	Soldering temperature	260℃ /5S		
引针尺寸	Pin dimensions [mm]	1.0*1.0		
PCB板孔径	PCB Hole Diameter [mm]	∅1.7		

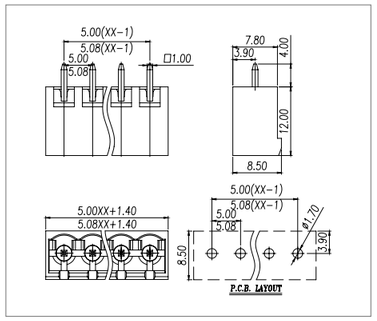

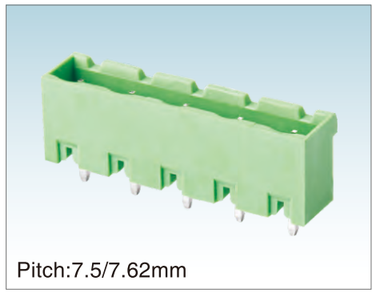

Pitch:7.5/7.62mm

WJ2EDGVC-7.5/7.62

UL/CUL 技术参数 UL/CUL Technical Data				
等级	Use Group	B	C	D
额定电压	Rated Voltage [V]	300	-	300
额定电流	Rated Current [A]	15	-	10
接线范围 Wire Range	单芯线 Solid [AWG]	/		
	多芯线 Stranded [AWG]	/		
耐电压	Dielectric Voltage-Withstand	1.6KV		
IEC 技术参数 IEC Technical Data				
过电压类别	Overvoltage Category	Ⅲ	Ⅲ	Ⅱ
污染等级	Contamination Class	3	2	2
额定电压	Rated Voltage [V]	400	630	630
额定电流	Rated Current [A]	15	15	15
额定冲击电压	Impulse withstand voltage [KV]	6	6	6
导线截面积 Conductor cross section	硬质导线 Solid[mm²]	/		
	柔性导线 Flexible[mm²]	/		
材料 Material				
绝缘材料	Insulation Material	PA66		
阻燃等级	Flame retardant rating	UL94V-0		
导体材料	Conductor Material	Copper alloy		
导体表面镀层	Plating of conductor surface	Sn plated		
一般参数 Other Data				
间距/极数	Pitch/Poles [mm]/[P]	7.5,7.62/2~24		
剥线长度	Stripping Length [mm]	/		
螺丝/扭矩	Screw/Torque(Max)[N.m]	/		
工作温度	Operating temperature[℃]	-40~+105		
焊锡温度	Soldering temperature	260℃ /5S		
引针尺寸	Pin dimensions [mm]	1.0*1.0		
PCB板孔径	PCB Hole Diameter [mm]	∅1.7		

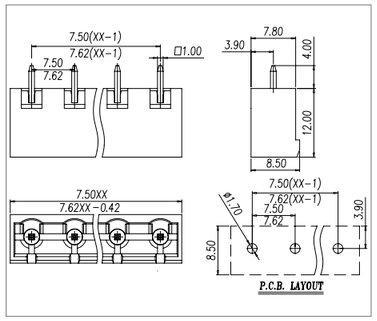

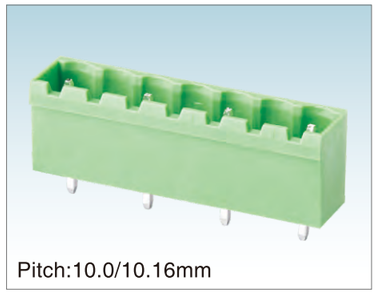

Pitch:10.0/10.16mm

WJ2EDGVC-10.0/10.16

UL/CUL 技术参数 UL/CUL Technical Data				
等级	Use Group	B	C	D
额定电压	Rated Voltage [V]	600	-	600
额定电流	Rated Current [A]	15	-	5
接线范围 Wire Range	单芯线 Solid [AWG]	/		
	多芯线 Stranded [AWG]	/		
耐电压	Dielectric Voltage-Withstand	2.2KV		
IEC 技术参数 IEC Technical Data				
过电压类别	Overvoltage Category	Ⅲ	Ⅲ	Ⅱ
污染等级	Contamination Class	3	2	2
额定电压	Rated Voltage [V]	630	1000	1000
额定电流	Rated Current [A]	10	10	10
额定冲击电压	Impulse withstand voltage [KV]	6	6	6
导线截面积 Conductor cross section	硬质导线 Solid[mm²]	/		
	柔性导线 Flexible[mm²]	/		
材料 Material				
绝缘材料	Insulation Material	PA66		
阻燃等级	Flame retardant rating	UL94V-0		
导体材料	Conductor Material	Copper alloy		
导体表面镀层	Plating of conductor surface	Sn plated		
一般参数 Other Data				
间距/极数	Pitch/Poles [mm]/[P]	10.0,10.16/2~12		
剥线长度	Stripping Length [mm]	/		
螺丝/扭矩	Screw/Torque(Max)[N.m]	/		
工作温度	Operating temperature[℃]	-40~+105		
焊锡温度	Soldering temperature	260℃ /5S		
引针尺寸	Pin dimensions [mm]	1.0*1.0		
PCB板孔径	PCB Hole Diameter [mm]	∅1.7		

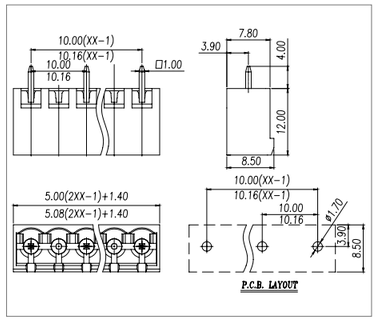

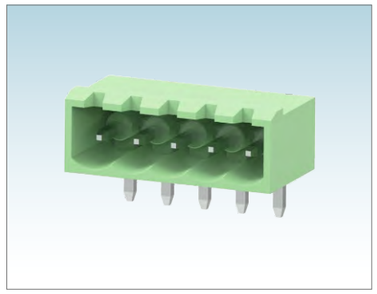

WJ2EDGRC-3.81

UL/CUL 技术参数 UL/CUL Technical Data				
等级	Use Group	B	C	D
额定电压	Rated Voltage [V]	300	-	300
额定电流	Rated Current [A]	8	-	8
接线范围 Wire Range	单芯线 Solid [AWG]	/		
	多芯线 Stranded [AWG]	/		
耐电压	Dielectric Voltage-Withstand	1.6KV		
IEC 技术参数 IEC Technical Data				
过电压类别	Surge voltage category	Ⅲ	Ⅲ	Ⅱ
污染等级	Contamination Class	3	2	2
额定电压	Rated Voltage [V]	160	160	250
额定电流	Rated Current [A]	7	7	7
额定冲击电压	Impulse withstand voltage [KV]	2.5	2.5	2.5
导线截面积 Conductor cross section	硬质导线 Solid[mm²]	/		
	柔性导线 Flexible[mm²]	/		
材料 Material				
绝缘材料	Insulation Material	PA66		
阻燃等级	Inflammability Class	UL94V-0		
导体材料	Conductor Material	Copper alloy		
导体表面镀层	Conductor Plating	Sn plated		
一般参数 Other Data				
间距/极数	Pitch/Poles [mm]/[P]	3.81/2-24		
剥线长度	Stripping Length [mm]	/		
螺丝/扭矩	Screw/Torque(Max)[N.m]	/		
工作温度	Operating temperature[℃]	-40~+105		
焊锡温度	Soldering temperature	260℃/5S		
引针尺寸	Pin dimensions [mm]	1.0*1.0		
PCB板孔径	PCB Hole Diameter [mm]	∅1.7		

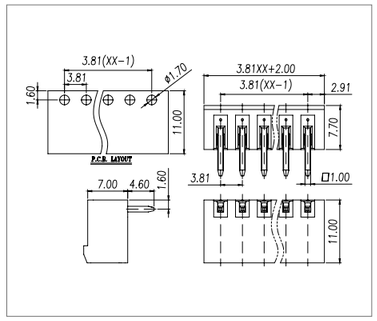

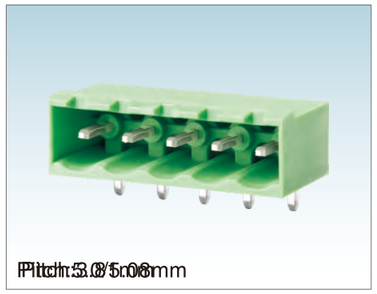

Pitch:5.0/5.08mm

WJ2EDGRC-5.0/5.08

UL/CUL 技术参数 UL/CUL Technical Data				
等级	Use Group	B	C	D
额定电压	Rated Voltage [V]	300	-	300
额定电流	Rated Current [A]	15	-	10
接线范围 Wire Range	单芯线 Solid [AWG]	/		
	多芯线 Stranded [AWG]	/		
耐电压	Dielectric Voltage-Withstand	1.6KV		
IEC 技术参数 IEC Technical Data				
过电压类别	Overvoltage Category	Ⅲ	Ⅲ	Ⅱ
污染等级	Contamination Class	3	2	2
额定电压	Rated Voltage [V]	250	320	630
额定电流	Rated Current [A]	15	15	15
额定冲击电压	Impulse withstand voltage [KV]	4	4	4
导线截面积 Conductor cross section	硬质导线 Solid[mm²]	/		
	柔性导线 Flexible[mm²]	/		
材料 Material				
绝缘材料	Insulation Material	PA66		
阻燃等级	Flame retardant rating	UL94V-0		
导体材料	Conductor Material	Copper alloy		
导体表面镀层	Plating of conductor surface	Sn plated		
一般参数 Other Data				
间距/极数	Pitch/Poles [mm]/[P]	5.0,5.08/2~24		
剥线长度	Stripping Length [mm]	/		
螺丝/扭矩	Screw/Torque(Max)[N.m]	/		
工作温度	Operating temperature[℃]	-40~+105		
焊锡温度	Soldering temperature	260℃ /5S		
引针尺寸	Pin dimensions [mm]	1.0*1.0		
PCB板孔径	PCB Hole Diameter [mm]	∅1.7		

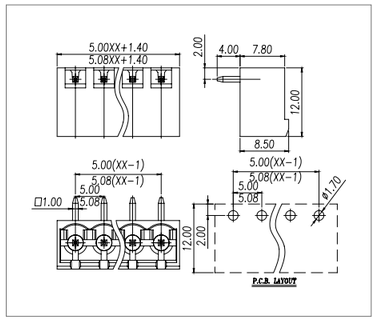

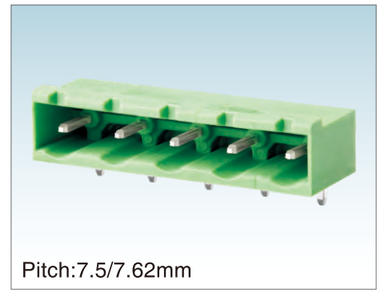

Pitch:7.5/7.62mm

WJ2EDGRC-7.5/7.62

UL/CUL 技术参数 UL/CUL Technical Data				
等级	Use Group	B	C	D
额定电压	Rated Voltage [V]	300	-	300
额定电流	Rated Current [A]	15	-	10
接线范围 Wire Range	单芯线 Solid [AWG]	/		
	多芯线 Stranded [AWG]	/		
耐电压	Dielectric Voltage-Withstand	1.6KV		
IEC 技术参数 IEC Technical Data				
过电压类别	Overvoltage Category	Ⅲ	Ⅲ	Ⅱ
污染等级	Contamination Class	3	2	2
额定电压	Rated Voltage [V]	400	630	630
额定电流	Rated Current [A]	15	15	15
额定冲击电压	Impulse withstand voltage [KV]	6	6	6
导线截面积 Conductor cross section	硬质导线 Solid[mm²]	/		
	柔性导线 Flexible[mm²]	/		
材料 Material				
绝缘材料	Insulation Material	PA66		
阻燃等级	Flame retardant rating	UL94V-0		
导体材料	Conductor Material	Copper alloy		
导体表面镀层	Plating of conductor surface	Sn plated		
一般参数 Other Data				
间距/极数	Pitch/Poles [mm]/[P]	7.5,7.62/2~24		
剥线长度	Stripping Length [mm]	/		
螺丝/扭矩	Screw/Torque(Max)[N.m]	/		
工作温度	Operating temperature[℃]	-40~+105		
焊锡温度	Soldering temperature	260℃ /5S		
引针尺寸	Pin dimensions [mm]	1.0*1.0		
PCB板孔径	PCB Hole Diameter [mm]	∅1.7		

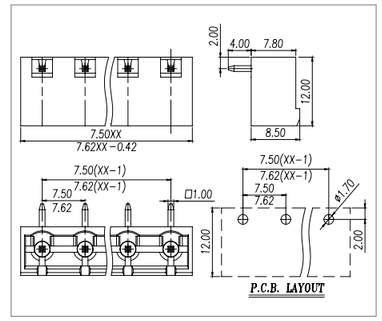

ISO14001 ISO45001 ISO9001 ISO80079-34 ISO/TS 22163



Pitch:10.0/10.16mm

WJ2EDGRC-10.0/10.16

UL/CUL 技术参数 UL/CUL Technical Data				
等级	Use Group	B	C	D
额定电压	Rated Voltage [V]	600	-	600
额定电流	Rated Current [A]	15	-	5
接线范围 Wire Range	单芯线 Solid [AWG]	/		
	多芯线 Stranded [AWG]	/		
耐电压	Dielectric Voltage-Withstand	2.2KV		
IEC 技术参数 IEC Technical Data				
过电压类别	Overvoltage Category	Ⅲ	Ⅲ	Ⅱ
污染等级	Contamination Class	3	2	2
额定电压	Rated Voltage [V]	630	1000	1000
额定电流	Rated Current [A]	10	10	10
额定冲击电压	Impulse withstand voltage [KV]	6	6	6
导线截面积 Conductor cross section	硬质导线 Solid[mm²]	/		
	柔性导线 Flexible[mm²]	/		
材料 Material				
绝缘材料	Insulation Material	PA66		
阻燃等级	Flame retardant rating	UL94V-0		
导体材料	Conductor Material	Copper alloy		
导体表面镀层	Plating of conductor surface	Sn plated		
一般参数 Other Data				
间距/极数	Pitch/Poles [mm]/[P]	10.0,10.16/2~12		
剥线长度	Stripping Length [mm]	/		
螺丝/扭矩	Screw/Torque(Max)[N.m]	/		
工作温度	Operating temperature[℃]	-40~+105		
焊锡温度	Soldering temperature	260℃ /5S		
引针尺寸	Pin dimensions [mm]	1.0*1.0		
PCB板孔径	PCB Hole Diameter [mm]	∅1.7		

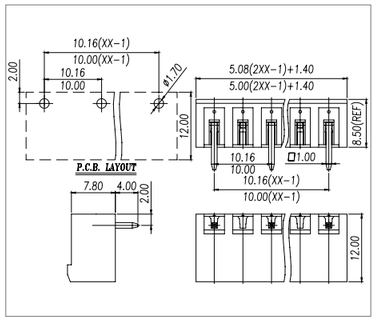

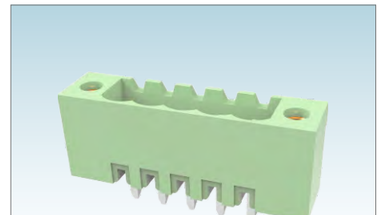

Pitch:3.81mm

WJ2EDGVM-3.81

UL/CUL 技术参数 UL/CUL Technical Data				
等级	Use Group	B	C	D
额定电压	Rated Voltage [V]	300	-	300
额定电流	Rated Current [A]	8	-	8
接线范围 Wire Range	单芯线 Solid [AWG]	/		
	多芯线 Stranded [AWG]	/		
耐电压	Dielectric Voltage-Withstand	1.6KV		
IEC 技术参数 IEC Technical Data				
过电压类别	Surge voltage category	Ⅲ	Ⅲ	Ⅱ
污染等级	Contamination Class	3	2	2
额定电压	Rated Voltage [V]	160	160	250
额定电流	Rated Current [A]	7	7	7
额定冲击电压	Impulse withstand voltage [KV]	2.5	2.5	2.5
导线截面积 Conductor cross section	硬质导线 Solid[mm²]	/		
	柔性导线 Flexible[mm²]	/		
材料 Material				
绝缘材料	Insulation Material	PA66		
阻燃等级	Inflammability Class	UL94V-0		
导体材料	Conductor Material	Copper alloy		
导体表面镀层	Conductor Plating	Sn plated		
一般参数 Other Data				
间距/极数	Pitch/Poles [mm]/[P]	3.81/2-24		
剥线长度	Stripping Length [mm]	/		
螺丝/扭矩	Screw/Torque(Max)[N.m]	/		
工作温度	Operating temperature[℃]	-40~+105		
焊锡温度	Soldering temperature	260℃/5S		
引针尺寸	Pin dimensions [mm]	1.0*1.0		
PCB板孔径	PCB Hole Diameter [mm]	∅1.7		

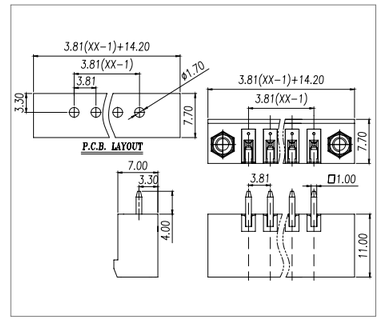

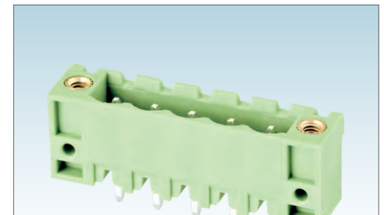

Pitch:5.0/5.08mm

WJ2EDGVM-5.0/5.08

UL/CUL 技术参数 UL/CUL Technical Data				
等级	Use Group	B	C	D
额定电压	Rated Voltage [V]	300	-	300
额定电流	Rated Current [A]	15	-	10
接线范围 Wire Range	单芯线 Solid [AWG]	/		
	多芯线 Stranded [AWG]	/		
耐电压	Dielectric Voltage-Withstand	1.6KV		
IEC 技术参数 IEC Technical Data				
过电压类别	Overvoltage Category	Ⅲ	Ⅲ	Ⅱ
污染等级	Contamination Class	3	2	2
额定电压	Rated Voltage [V]	250	320	630
额定电流	Rated Current [A]	15	15	15
额定冲击电压	Impulse withstand voltage [KV]	4	4	4
导线截面积 Conductor cross section	硬质导线 Solid[mm²]	/		
	柔性导线 Flexible[mm²]	/		
材料 Material				
绝缘材料	Insulation Material	PA66		
阻燃等级	Flame retardant rating	UL94V-0		
导体材料	Conductor Material	Copper alloy		
导体表面镀层	Plating of conductor surface	Sn plated		
一般参数 Other Data				
间距/极数	Pitch/Poles [mm]/[P]	5.0,5.08/2~24		
剥线长度	Stripping Length [mm]	/		
螺丝/扭矩	Screw/Torque(Max)[N.m]	/		
工作温度	Operating temperature[℃]	-40~+105		
焊锡温度	Soldering temperature	260℃ /5S		
引针尺寸	Pin dimensions [mm]	1.0*1.0		
PCB板孔径	PCB Hole Diameter [mm]	∅1.7		

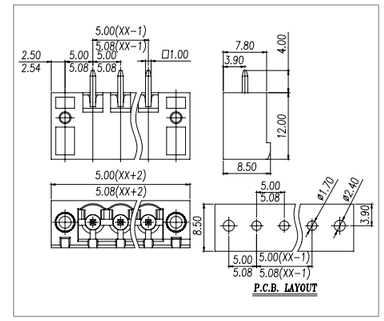

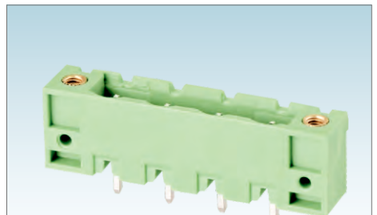

Pitch:7.5/7.62mm

WJ2EDGVM-7.5/7.62

UL/CUL 技术参数 UL/CUL Technical Data				
等级	Use Group	B	C	D
额定电压	Rated Voltage [V]	300	-	300
额定电流	Rated Current [A]	15	-	10
接线范围 Wire Range	单芯线 Solid [AWG]	/		
	多芯线 Stranded [AWG]	/		
耐电压	Dielectric Voltage-Withstand	1.6KV		
IEC 技术参数 IEC Technical Data				
过电压类别	Overvoltage Category	Ⅲ	Ⅲ	Ⅱ
污染等级	Contamination Class	3	2	2
额定电压	Rated Voltage [V]	400	630	630
额定电流	Rated Current [A]	15	15	15
额定冲击电压	Impulse withstand voltage [KV]	6	6	6
导线截面积 Conductor cross section	硬质导线 Solid[mm²]	/		
	柔性导线 Flexible[mm²]	/		
材料 Material				
绝缘材料	Insulation Material	PA66		
阻燃等级	Flame retardant rating	UL94V-0		
导体材料	Conductor Material	Copper alloy		
导体表面镀层	Plating of conductor surface	Sn plated		
一般参数 Other Data				
间距/极数	Pitch/Poles [mm]/[P]	7.5,7.62/2~24		
剥线长度	Stripping Length [mm]	/		
螺丝/扭矩	Screw/Torque(Max)[N.m]	/		
工作温度	Operating temperature[℃]	-40~+105		
焊锡温度	Soldering temperature	260℃ /5S		
引针尺寸	Pin dimensions [mm]	1.0*1.0		
PCB板孔径	PCB Hole Diameter [mm]	∅1.7		

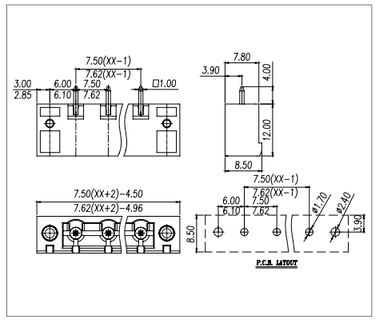

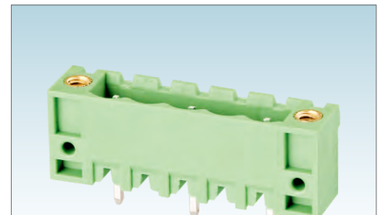

Pitch:10.0/10.16mm

WJ2EDGVM-10.0/10.16

UL/CUL 技术参数 UL/CUL Technical Data				
等级	Use Group	B	C	D
额定电压	Rated Voltage [V]	600	-	600
额定电流	Rated Current [A]	15	-	5
接线范围 Wire Range	单芯线 Solid [AWG]	/		
	多芯线 Stranded [AWG]	/		
耐电压	Dielectric Voltage-Withstand	2.2KV		
IEC 技术参数 IEC Technical Data				
过电压类别	Overvoltage Category	Ⅲ	Ⅲ	Ⅱ
污染等级	Contamination Class	3	2	2
额定电压	Rated Voltage [V]	630	1000	1000
额定电流	Rated Current [A]	10	10	10
额定冲击电压	Impulse withstand voltage [KV]	6	6	6
导线截面积 Conductor cross section	硬质导线 Solid[mm²]	/		
	柔性导线 Flexible[mm²]	/		
材料 Material				
绝缘材料	Insulation Material	PA66		
阻燃等级	Flame retardant rating	UL94V-0		
导体材料	Conductor Material	Copper alloy		
导体表面镀层	Plating of conductor surface	Sn plated		
一般参数 Other Data				
间距/极数	Pitch/Poles [mm]/[P]	10.0,10.16/2~12		
剥线长度	Stripping Length [mm]	/		
螺丝/扭矩	Screw/Torque(Max)[N.m]	/		
工作温度	Operating temperature[℃]	-40~+105		
焊锡温度	Soldering temperature	260℃ /5S		
引针尺寸	Pin dimensions [mm]	1.0*1.0		
PCB板孔径	PCB Hole Diameter [mm]	∅1.7		

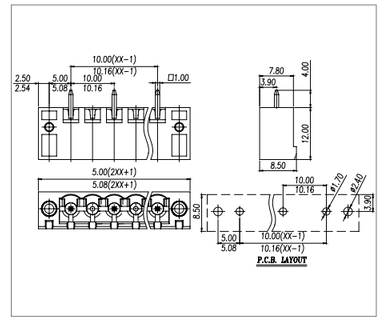

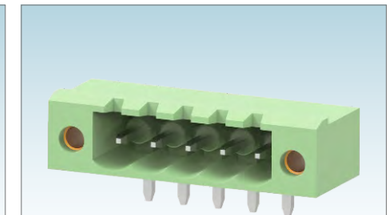

Pitch:3.81mm

WJ2EDGRM-3.81

UL/CUL 技术参数 UL/CUL Technical Data				
等级	Use Group	B	C	D
额定电压	Rated Voltage [V]	300	-	300
额定电流	Rated Current [A]	8	-	8
接线范围 Wire Range	单芯线 Solid [AWG]	/		
	多芯线 Stranded [AWG]	/		
耐电压	Dielectric Voltage-Withstand	1.6KV		
IEC 技术参数 IEC Technical Data				
过电压类别	Surge voltage category	Ⅲ	Ⅲ	Ⅱ
污染等级	Contamination Class	3	2	2
额定电压	Rated Voltage [V]	160	160	250
额定电流	Rated Current [A]	7	7	7
额定冲击电压	Impulse withstand voltage [KV]	2.5	2.5	2.5
导线截面积 Conductor cross section	硬质导线 Solid[mm²]	/		
	柔性导线 Flexible[mm²]	/		
材料 Material				
绝缘材料	Insulation Material	PA66		
阻燃等级	Inflammability Class	UL94V-0		
导体材料	Conductor Material	Copper alloy		
导体表面镀层	Conductor Plating	Sn plated		
一般参数 Other Data				
间距/极数	Pitch/Poles [mm]/[P]	3.81/2-24		
剥线长度	Stripping Length [mm]	/		
螺丝/扭矩	Screw/Torque(Max)[N.m]	/		
工作温度	Operating temperature[℃]	-40~+105		
焊锡温度	Soldering temperature	260℃/5S		
引针尺寸	Pin dimensions [mm]	1.0*1.0		
PCB板孔径	PCB Hole Diameter [mm]	∅1.7		

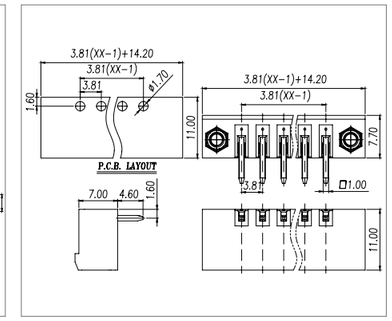

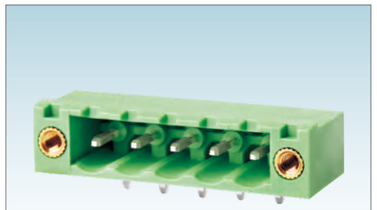

Pitch:5.0/5.08mm

WJ2EDGRM-5.0/5.08

UL/CUL 技术参数 UL/CUL Technical Data				
等级	Use Group	B	C	D
额定电压	Rated Voltage [V]	300	-	300
额定电流	Rated Current [A]	15	-	10
接线范围 Wire Range	单芯线 Solid [AWG]	/		
	多芯线 Stranded [AWG]	/		
耐电压	Dielectric Voltage-Withstand	1.6KV		
IEC 技术参数 IEC Technical Data				
过电压类别	Overvoltage Category	Ⅲ	Ⅲ	Ⅱ
污染等级	Contamination Class	3	2	2
额定电压	Rated Voltage [V]	250	320	630
额定电流	Rated Current [A]	15	15	15
额定冲击电压	Impulse withstand voltage [KV]	4	4	4
导线截面积 Conductor cross section	硬质导线 Solid[mm²]	/		
	柔性导线 Flexible[mm²]	/		
材料 Material				
绝缘材料	Insulation Material	PA66		
阻燃等级	Flame retardant rating	UL94V-0		
导体材料	Conductor Material	Copper alloy		
导体表面镀层	Plating of conductor surface	Sn plated		
一般参数 Other Data				
间距/极数	Pitch/Poles [mm]/[P]	5.0,5.08/2~24		
剥线长度	Stripping Length [mm]	/		
螺丝/扭矩	Screw/Torque(Max)[N.m]	/		
工作温度	Operating temperature[℃]	-40~+105		
焊锡温度	Soldering temperature	260℃ /5S		
引针尺寸	Pin dimensions [mm]	1.0*1.0		
PCB板孔径	PCB Hole Diameter [mm]	∅1.7		

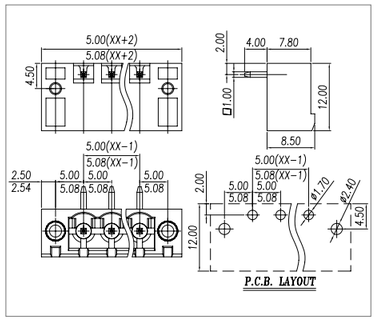

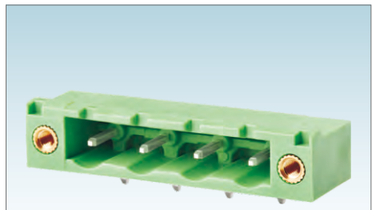

Pitch:7.5/7.62mm

WJ2EDGRM-7.5/7.62

UL/CUL 技术参数 UL/CUL Technical Data				
等级	Use Group	B	C	D
额定电压	Rated Voltage [V]	300	-	300
额定电流	Rated Current [A]	15	-	10
接线范围 Wire Range	单芯线 Solid [AWG]	/		
	多芯线 Stranded [AWG]	/		
耐电压	Dielectric Voltage-Withstand	1.6KV		
IEC 技术参数 IEC Technical Data				
过电压类别	Overvoltage Category	Ⅲ	Ⅲ	Ⅱ
污染等级	Contamination Class	3	2	2
额定电压	Rated Voltage [V]	400	630	630
额定电流	Rated Current [A]	15	15	15
额定冲击电压	Impulse withstand voltage [KV]	6	6	6
导线截面积 Conductor cross section	硬质导线 Solid[mm²]	/		
	柔性导线 Flexible[mm²]	/		
材料 Material				
绝缘材料	Insulation Material	PA66		
阻燃等级	Flame retardant rating	UL94V-0		
导体材料	Conductor Material	Copper alloy		
导体表面镀层	Plating of conductor surface	Sn plated		
一般参数 Other Data				
间距/极数	Pitch/Poles [mm]/[P]	7.5,7.62/2~24		
剥线长度	Stripping Length [mm]	/		
螺丝/扭矩	Screw/Torque(Max)[N.m]	/		
工作温度	Operating temperature[℃]	-40~+105		
焊锡温度	Soldering temperature	260℃ /5S		
引针尺寸	Pin dimensions [mm]	1.0*1.0		
PCB板孔径	PCB Hole Diameter [mm]	∅1.7		

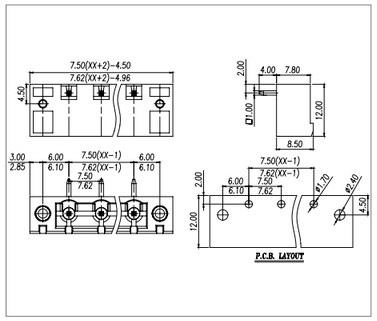

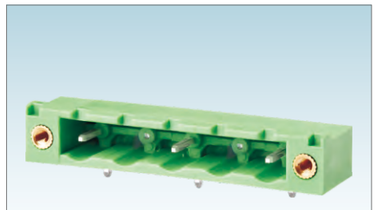

Pitch:10.0/10.16mm

WJ2EDGRM-10.0/10.16

UL/CUL 技术参数 UL/CUL Technical Data				
等级	Use Group	B	C	D
额定电压	Rated Voltage [V]	600	-	600
额定电流	Rated Current [A]	15	-	5
接线范围 Wire Range	单芯线 Solid [AWG]	/		
	多芯线 Stranded [AWG]	/		
耐电压	Dielectric Voltage-Withstand	2.2KV		
IEC 技术参数 IEC Technical Data				
过电压类别	Overvoltage Category	Ⅲ	Ⅲ	Ⅱ
污染等级	Contamination Class	3	2	2
额定电压	Rated Voltage [V]	630	1000	1000
额定电流	Rated Current [A]	10	10	10
额定冲击电压	Impulse withstand voltage [KV]	6	6	6
导线截面积 Conductor cross section	硬质导线 Solid[mm²]	/		
	柔性导线 Flexible[mm²]	/		
材料 Material				
绝缘材料	Insulation Material	PA66		
阻燃等级	Flame retardant rating	UL94V-0		
导体材料	Conductor Material	Copper alloy		
导体表面镀层	Plating of conductor surface	Sn plated		
一般参数 Other Data				
间距/极数	Pitch/Poles [mm]/[P]	10.0,10.16/2~12		
剥线长度	Stripping Length [mm]	/		
螺丝/扭矩	Screw/Torque(Max)[N.m]	/		
工作温度	Operating temperature[℃]	-40~+105		
焊锡温度	Soldering temperature	260℃ /5S		
引针尺寸	Pin dimensions [mm]	1.0*1.0		
PCB板孔径	PCB Hole Diameter [mm]	∅1.7		

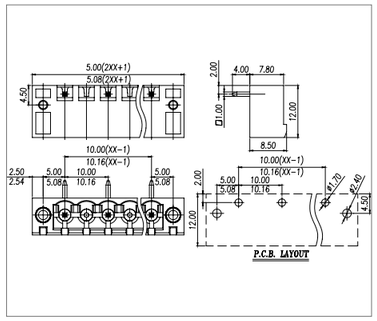

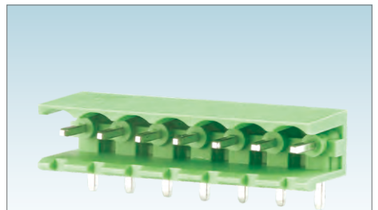

Pitch:5.0/5.08mm

WJ2EDGRR-5.0/5.08

UL/CUL 技术参数 UL/CUL Technical Data				
等级	Use Group	B	C	D
额定电压	Rated Voltage [V]	300	-	300
额定电流	Rated Current [A]	15	-	10
接线范围 Wire Range	单芯线 Solid [AWG]	/		
	多芯线 Stranded [AWG]	/		
耐电压	Dielectric Voltage-Withstand	1.6KV		
IEC 技术参数 IEC Technical Data				
过电压类别	Overvoltage Category	Ⅲ	Ⅲ	Ⅱ
污染等级	Contamination Class	3	2	2
额定电压	Rated Voltage [V]	250	320	400
额定电流	Rated Current [A]	10	10	10
额定冲击电压	Impulse withstand voltage [KV]	4	4	4
导线截面积 Conductor cross section	硬质导线 Solid[mm²]	/		
	柔性导线 Flexible[mm²]	/		
材料 Material				
绝缘材料	Insulation Material	PA66		
阻燃等级	Flame retardant rating	UL94V-0		
导体材料	Conductor Material	Copper alloy		
导体表面镀层	Plating of conductor surface	Sn plated		
一般参数 Other Data				
间距/极数	Pitch/Poles [mm]/[P]	5.0,5.08/2~24		
剥线长度	Stripping Length [mm]	/		
螺丝/扭矩	Screw/Torque(Max)[N.m]	/		
工作温度	Operating temperature[℃]	-40~+105		
焊锡温度	Soldering temperature	260℃ /5S		
引针尺寸	Pin dimensions [mm]	1.0*1.0		
PCB板孔径	PCB Hole Diameter [mm]	∅1.7		

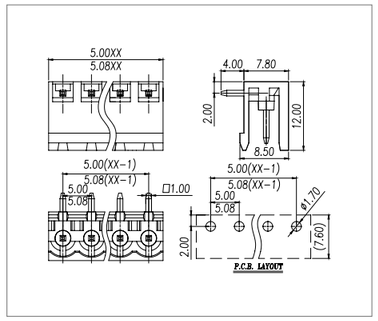

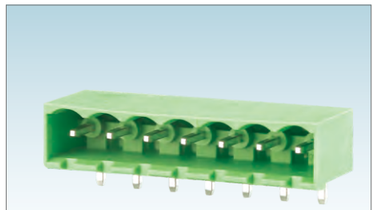

Pitch:5.0/5.08mm

WJ2EDGRRC-5.0/5.08

UL/CUL 技术参数 UL/CUL Technical Data				
等级	Use Group	B	C	D
额定电压	Rated Voltage [V]	300	-	300
额定电流	Rated Current [A]	15	-	10
接线范围 Wire Range	单芯线 Solid [AWG]	/		
	多芯线 Stranded [AWG]	/		
耐电压	Dielectric Voltage-Withstand	1.6KV		
IEC 技术参数 IEC Technical Data				
过电压类别	Overvoltage Category	Ⅲ	Ⅲ	Ⅱ
污染等级	Contamination Class	3	2	2
额定电压	Rated Voltage [V]	250	320	400
额定电流	Rated Current [A]	10	10	10
额定冲击电压	Impulse withstand voltage [KV]	4	4	4
导线截面积 Conductor cross section	硬质导线 Solid[mm²]	/		
	柔性导线 Flexible[mm²]	/		
材料 Material				
绝缘材料	Insulation Material	PA66		
阻燃等级	Flame retardant rating	UL94V-0		
导体材料	Conductor Material	Copper alloy		
导体表面镀层	Plating of conductor surface	Sn plated		
一般参数 Other Data				
间距/极数	Pitch/Poles [mm]/[P]	5.0,5.08/2~24		
剥线长度	Stripping Length [mm]	/		
螺丝/扭矩	Screw/Torque(Max)[N.m]	/		
工作温度	Operating temperature[℃]	-40~+105		
焊锡温度	Soldering temperature	260℃ /5S		
引针尺寸	Pin dimensions [mm]	1.0*1.0		
PCB板孔径	PCB Hole Diameter [mm]	∅1.7		

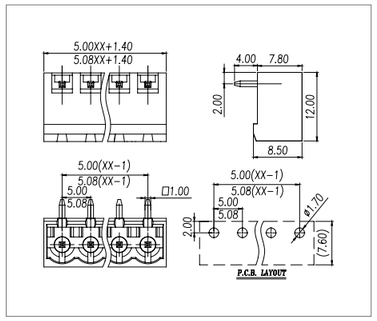

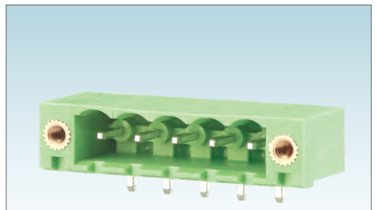

Pitch:5.0/5.08mm

WJ2EDGRRM-5.0/5.08

UL/CUL 技术参数 UL/CUL Technical Data				
等级	Use Group	B	C	D
额定电压	Rated Voltage [V]	300	-	300
额定电流	Rated Current [A]	15	-	10
接线范围 Wire Range	单芯线 Solid [AWG]	/		
	多芯线 Stranded [AWG]	/		
耐电压	Dielectric Voltage-Withstand	1.6KV		
IEC 技术参数 IEC Technical Data				
过电压类别	Overvoltage Category	Ⅲ	Ⅲ	Ⅱ
污染等级	Contamination Class	3	2	2
额定电压	Rated Voltage [V]	250	320	400
额定电流	Rated Current [A]	10	10	10
额定冲击电压	Impulse withstand voltage [KV]	4	4	4
导线截面积 Conductor cross section	硬质导线 Solid[mm²]	/		
	柔性导线 Flexible[mm²]	/		
材料 Material				
绝缘材料	Insulation Material	PA66		
阻燃等级	Flame retardant rating	UL94V-0		
导体材料	Conductor Material	Copper alloy		
导体表面镀层	Plating of conductor surface	Sn plated		
一般参数 Other Data				
间距/极数	Pitch/Poles [mm]/[P]	5.0,5.08/2~24		
剥线长度	Stripping Length [mm]	/		
螺丝/扭矩	Screw/Torque(Max)[N.m]	/		
工作温度	Operating temperature[℃]	-40~+105		
焊锡温度	Soldering temperature	260℃ /5S		
引针尺寸	Pin dimensions [mm]	1.0*1.0		
PCB板孔径	PCB Hole Diameter [mm]	∅1.7		

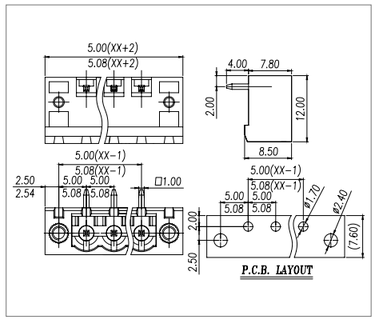

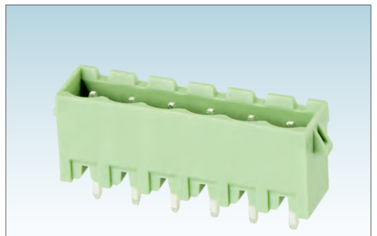

Pitch:5.08mm

WJ2EDGVG-5.08

UL/CUL 技术参数 UL/CUL Technical Data				
等级	Use Group	B	C	D
额定电压	Rated Voltage [V]	300	-	300
额定电流	Rated Current [A]	15	-	10
接线范围 Wire Range	单芯线 Solid [AWG]	/		
	多芯线 Stranded [AWG]	/		
耐电压	Dielectric Voltage-Withstand	1.6KV		
IEC 技术参数 IEC Technical Data				
过电压类别	Overvoltage Category	Ⅲ	Ⅲ	Ⅱ
污染等级	Contamination Class	3	2	2
额定电压	Rated Voltage [V]	250	320	400
额定电流	Rated Current [A]	12	12	12
额定冲击电压	Impulse withstand voltage [KV]	4	4	4
导线截面积 Conductor cross section	硬质导线 Solid[mm²]	/		
	柔性导线 Flexible[mm²]	/		
材料 Material				
绝缘材料	Insulation Material	PA66		
阻燃等级	Flame retardant rating	UL94V-0		
导体材料	Conductor Material	Copper alloy		
导体表面镀层	Plating of conductor surface	Sn plated		
一般参数 Other Data				
间距/极数	Pitch/Poles [mm]/[P]	5.08/2~24		
剥线长度	Stripping Length [mm]	/		
螺丝/扭矩	Screw/Torque(Max)[N.m]	/		
工作温度	Operating temperature[℃]	-40~+105		
焊锡温度	Soldering temperature	260℃ /5S		
引针尺寸	Pin dimensions [mm]	1.0*1.0		
PCB板孔径	PCB Hole Diameter [mm]	∅1.7		

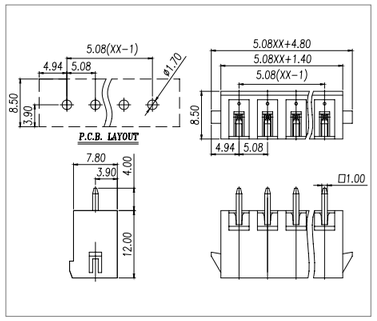

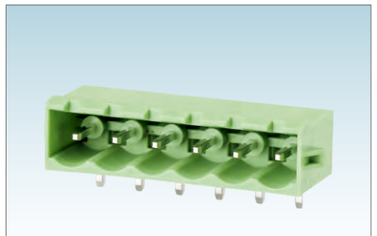

Pitch:5.08mm

WJ2EDGRG-5.08

UL/CUL 技术参数 UL/CUL Technical Data				
等级	Use Group	B	C	D
额定电压	Rated Voltage [V]	300	-	300
额定电流	Rated Current [A]	15	-	10
接线范围 Wire Range	单芯线 Solid [AWG]	/		
	多芯线 Stranded [AWG]	/		
耐电压	Dielectric Voltage-Withstand	1.6KV		
IEC 技术参数 IEC Technical Data				
过电压类别	Overvoltage Category	Ⅲ	Ⅲ	Ⅱ
污染等级	Contamination Class	3	2	2
额定电压	Rated Voltage [V]	250	320	400
额定电流	Rated Current [A]	12	12	12
额定冲击电压	Impulse withstand voltage [KV]	4	4	4
导线截面积 Conductor cross section	硬质导线 Solid[mm²]	/		
	柔性导线 Flexible[mm²]	/		
材料 Material				
绝缘材料	Insulation Material	PA66		
阻燃等级	Flame retardant rating	UL94V-0		
导体材料	Conductor Material	Copper alloy		
导体表面镀层	Plating of conductor surface	Sn plated		
一般参数 Other Data				
间距/极数	Pitch/Poles [mm]/[P]	5.08/2~24		
剥线长度	Stripping Length [mm]	/		
螺丝/扭矩	Screw/Torque(Max)[N.m]	/		
工作温度	Operating temperature[℃]	-40~+105		
焊锡温度	Soldering temperature	260℃ /5S		
引针尺寸	Pin dimensions [mm]	1.0*1.0		
PCB板孔径	PCB Hole Diameter [mm]	∅1.7		

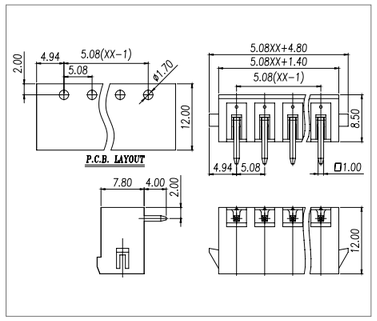



Pitch:5.0/5.08mm

WJ2EDGV-THT-5.0/5.08

UL/CUL 技术参数 UL/CUL Technical Data				
等级	Use Group	B	C	D
额定电压	Rated Voltage [V]	300	-	300
额定电流	Rated Current [A]	15	-	10
接线范围 Wire Range	单芯线 Solid [AWG]	/		
	多芯线 Stranded [AWG]	/		
耐电压	Dielectric Voltage-Withstand	1.6KV		
IEC 技术参数 IEC Technical Data				
过电压类别	Overvoltage Category	Ⅲ	Ⅲ	Ⅱ
污染等级	Contamination Class	3	2	2
额定电压	Rated Voltage [V]	250	320	400
额定电流	Rated Current [A]	12	12	12
额定冲击电压	Impulse withstand voltage [KV]	4	4	4
导线截面积 Conductor cross section	硬质导线 Solid[mm²]	/		
	柔性导线 Flexible[mm²]	/		
材料 Material				
绝缘材料	Insulation Material	LCP		
阻燃等级	Flame retardant rating	UL94V-0		
导体材料	Conductor Material	Copper alloy		
导体表面镀层	Plating of conductor surface	Sn plated		
一般参数 Other Data				
间距/极数	Pitch/Poles [mm]/[P]	5.0,5.08/2-24		
剥线长度	Stripping Length [mm]	/		
螺丝/扭矩	Screw/Torque(Max)[N.m]	/		
工作温度	Operating temperature[℃]	-40~+130		
焊锡温度	Soldering temperature	260℃ /10S		
引针尺寸	Pin dimensions [mm]	1.0*1.0		
PCB板孔径	PCB Hole Diameter [mm]	∅1.7		

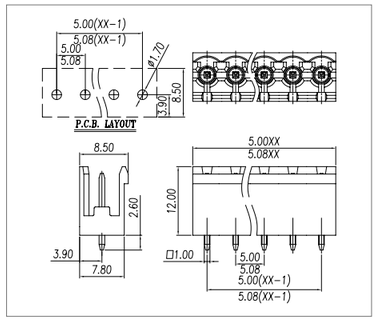



Pitch:5.0/5.08mm

WJ2EDGVC-THT-5.0/5.08

UL/CUL 技术参数 UL/CUL Technical Data				
等级	Use Group	B	C	D
额定电压	Rated Voltage [V]	300	-	300
额定电流	Rated Current [A]	15	-	10
接线范围 Wire Range	单芯线 Solid [AWG]	/		
	多芯线 Stranded [AWG]	/		
耐电压	Dielectric Voltage-Withstand	1.6KV		
IEC 技术参数 IEC Technical Data				
过电压类别	Overvoltage Category	Ⅲ	Ⅲ	Ⅱ
污染等级	Contamination Class	3	2	2
额定电压	Rated Voltage [V]	250	320	400
额定电流	Rated Current [A]	12	12	12
额定冲击电压	Impulse withstand voltage [KV]	4	4	4
导线截面积 Conductor cross section	硬质导线 Solid[mm²]	/		
	柔性导线 Flexible[mm²]	/		
材料 Material				
绝缘材料	Insulation Material	LCP		
阻燃等级	Flame retardant rating	UL94V-0		
导体材料	Conductor Material	Copper alloy		
导体表面镀层	Plating of conductor surface	Sn plated		
一般参数 Other Data				
间距/极数	Pitch/Poles [mm]/[P]	5.0,5.08/2-24		
剥线长度	Stripping Length [mm]	/		
螺丝/扭矩	Screw/Torque(Max)[N.m]	/		
工作温度	Operating temperature[℃]	-40~+130		
焊锡温度	Soldering temperature	260℃ /10S		
引针尺寸	Pin dimensions [mm]	1.0*1.0		
PCB板孔径	PCB Hole Diameter [mm]	∅1.7		

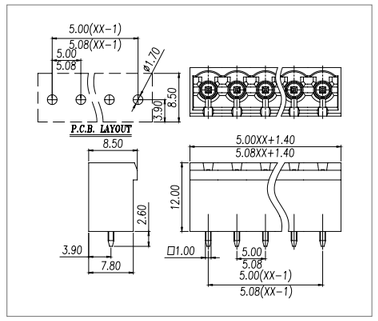

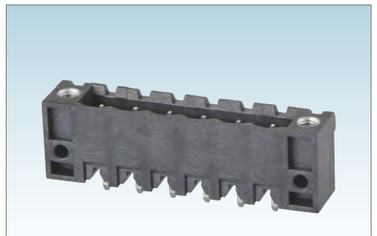

Pitch:5.0/5.08mm

WJ2EDGVM-THT-5.0/5.08

UL/CUL 技术参数 UL/CUL Technical Data				
等级	Use Group	B	C	D
额定电压	Rated Voltage [V]	300	-	300
额定电流	Rated Current [A]	15	-	10
接线范围 Wire Range	单芯线 Solid [AWG]	/		
	多芯线 Stranded [AWG]	/		
耐电压	Dielectric Voltage-Withstand	1.6KV		
IEC 技术参数 IEC Technical Data				
过电压类别	Overvoltage Category	Ⅲ	Ⅲ	Ⅱ
污染等级	Contamination Class	3	2	2
额定电压	Rated Voltage [V]	250	320	400
额定电流	Rated Current [A]	12	12	12
额定冲击电压	Impulse withstand voltage [KV]	4	4	4
导线截面积 Conductor cross section	硬质导线 Solid[mm²]	/		
	柔性导线 Flexible[mm²]	/		
材料 Material				
绝缘材料	Insulation Material	LCP		
阻燃等级	Flame retardant rating	UL94V-0		
导体材料	Conductor Material	Copper alloy		
导体表面镀层	Plating of conductor surface	Sn plated		
一般参数 Other Data				
间距/极数	Pitch/Poles [mm]/[P]	5.0,5.08/2-24		
剥线长度	Stripping Length [mm]	/		
螺丝/扭矩	Screw/Torque(Max)[N.m]	/		
工作温度	Operating temperature[℃]	-40~+130		
焊锡温度	Soldering temperature	260℃ /10S		
引针尺寸	Pin dimensions [mm]	1.0*1.0		
PCB板孔径	PCB Hole Diameter [mm]	∅1.7		

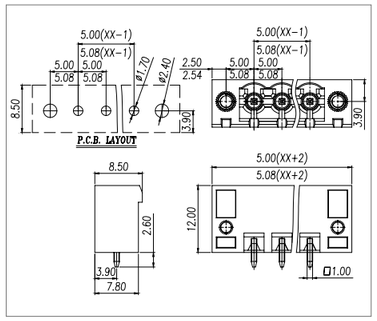

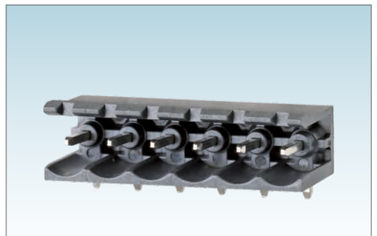

Pitch:5.0/5.08mm

WJ2EDGR-THT-5.0/5.08

UL/CUL 技术参数 UL/CUL Technical Data				
等级	Use Group	B	C	D
额定电压	Rated Voltage [V]	300	-	300
额定电流	Rated Current [A]	15	-	10
接线范围 Wire Range	单芯线 Solid [AWG]	/		
	多芯线 Stranded [AWG]	/		
耐电压	Dielectric Voltage-Withstand	1.6KV		
IEC 技术参数 IEC Technical Data				
过电压类别	Overvoltage Category	Ⅲ	Ⅲ	Ⅱ
污染等级	Contamination Class	3	2	2
额定电压	Rated Voltage [V]	250	320	400
额定电流	Rated Current [A]	12	12	12
额定冲击电压	Impulse withstand voltage [KV]	4	4	4
导线截面积 Conductor cross section	硬质导线 Solid[mm²]	/		
	柔性导线 Flexible[mm²]	/		
材料 Material				
绝缘材料	Insulation Material	LCP		
阻燃等级	Flame retardant rating	UL94V-0		
导体材料	Conductor Material	Copper alloy		
导体表面镀层	Plating of conductor surface	Sn plated		
一般参数 Other Data				
间距/极数	Pitch/Poles [mm]/[P]	5.0,5.08/2-24		
剥线长度	Stripping Length [mm]	/		
螺丝/扭矩	Screw/Torque(Max)[N.m]	/		
工作温度	Operating temperature[℃]	-40~+130		
焊锡温度	Soldering temperature	260℃ /10S		
引针尺寸	Pin dimensions [mm]	1.0*1.0		
PCB板孔径	PCB Hole Diameter [mm]	∅1.7		

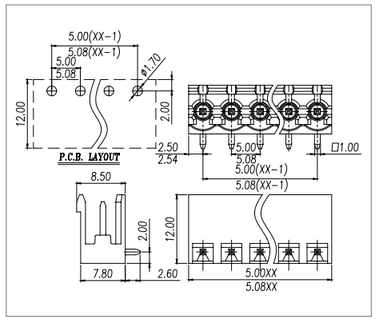

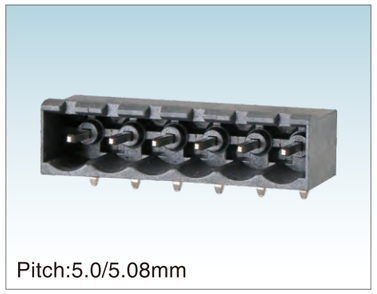

Pitch:5.0/5.08mm

WJ2EDGRC-THT-5.0/5.08

UL/CUL 技术参数 UL/CUL Technical Data				
等级	Use Group	B	C	D
额定电压	Rated Voltage [V]	300	-	300
额定电流	Rated Current [A]	15	-	10
接线范围 Wire Range	单芯线 Solid [AWG]	/		
	多芯线 Stranded [AWG]	/		
耐电压	Dielectric Voltage-Withstand	1.6KV		
IEC 技术参数 IEC Technical Data				
过电压类别	Overvoltage Category	Ⅲ	Ⅲ	Ⅱ
污染等级	Contamination Class	3	2	2
额定电压	Rated Voltage [V]	250	320	400
额定电流	Rated Current [A]	12	12	12
额定冲击电压	Impulse withstand voltage [KV]	4	4	4
导线截面积 Conductor cross section	硬质导线 Solid[mm²]	/		
	柔性导线 Flexible[mm²]	/		
材料 Material				
绝缘材料	Insulation Material	LCP		
阻燃等级	Flame retardant rating	UL94V-0		
导体材料	Conductor Material	Copper alloy		
导体表面镀层	Plating of conductor surface	Sn plated		
一般参数 Other Data				
间距/极数	Pitch/Poles [mm]/[P]	5.0,5.08/2-24		
剥线长度	Stripping Length [mm]	/		
螺丝/扭矩	Screw/Torque(Max)[N.m]	/		
工作温度	Operating temperature[℃]	-40~+130		
焊锡温度	Soldering temperature	285℃ /10S		
引针尺寸	Pin dimensions [mm]	1.0*1.0		
PCB板孔径	PCB Hole Diameter [mm]	∅1.7		

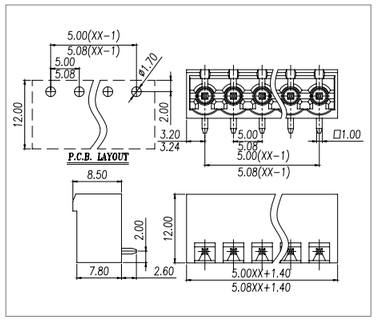

Pitch:5.0/5.08mm

WJ2EDGRM-THT-5.0/5.08

UL/CUL 技术参数 UL/CUL Technical Data				
等级	Use Group	B	C	D
额定电压	Rated Voltage [V]	300	-	300
额定电流	Rated Current [A]	15	-	10
接线范围 Wire Range	单芯线 Solid [AWG]	/		
	多芯线 Stranded [AWG]	/		
耐电压	Dielectric Voltage-Withstand	1.6KV		
IEC 技术参数 IEC Technical Data				
过电压类别	Overvoltage Category	Ⅲ	Ⅲ	Ⅱ
污染等级	Contamination Class	3	2	2
额定电压	Rated Voltage [V]	250	320	400
额定电流	Rated Current [A]	12	12	12
额定冲击电压	Impulse withstand voltage [KV]	4	4	4
导线截面积 Conductor cross section	硬质导线 Solid[mm²]	/		
	柔性导线 Flexible[mm²]	/		
材料 Material				
绝缘材料	Insulation Material	LCP		
阻燃等级	Flame retardant rating	UL94V-0		
导体材料	Conductor Material	Copper alloy		
导体表面镀层	Plating of conductor surface	Sn plated		
一般参数 Other Data				
间距/极数	Pitch/Poles [mm]/[P]	5.0,5.08/2-24		
剥线长度	Stripping Length [mm]	/		
螺丝/扭矩	Screw/Torque(Max)[N.m]	/		
工作温度	Operating temperature[℃]	-40~+130		
焊锡温度	Soldering temperature	285℃ /10S		
引针尺寸	Pin dimensions [mm]	1.0*1.0		
PCB板孔径	PCB Hole Diameter [mm]	∅1.7		

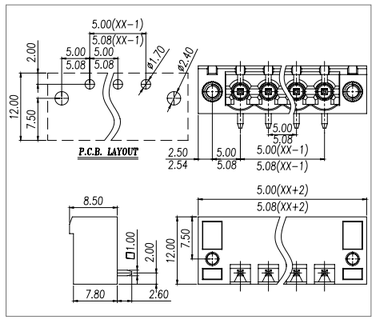

Pitch:5.0mm

WJ2EDGLF-5.0

UL/CUL 技术参数 UL/CUL Technical Data				
等级	Use Group	B	C	D
额定电压	Rated Voltage [V]	300	-	300
额定电流	Rated Current [A]	15	-	10
接线范围 Wire Range	单芯线 Solid [AWG]	/		
	多芯线 Stranded [AWG]	/		
耐电压	Dielectric Voltage-Withstand	1.6KV		
IEC 技术参数 IEC Technical Data				
过电压类别	Overvoltage Category	Ⅲ	Ⅲ	Ⅱ
污染等级	Contamination Class	3	2	2
额定电压	Rated Voltage [V]	250	320	630
额定电流	Rated Current [A]	20	20	20
额定冲击电压	Impulse withstand voltage [KV]	4	4	4
导线截面积 Conductor cross section	硬质导线 Solid[mm²]	/		
	柔性导线 Flexible[mm²]	/		
材料 Material				
绝缘材料	Insulation Material	PA66		
阻燃等级	Flame retardant rating	UL94V-0		
导体材料	Conductor Material	Copper alloy		
导体表面镀层	Plating of conductor surface	Sn plated		
一般参数 Other Data				
间距/极数	Pitch/Poles [mm]/[P]	5.0/2~4		
剥线长度	Stripping Length [mm]	/		
螺丝/扭矩	Screw/Torque(Max)[N.m]	/		
工作温度	Operating temperature[℃]	-40~+105		
焊锡温度	Soldering temperature	260℃ /5S		
引针尺寸	Pin dimensions [mm]	1.0*1.0		
PCB板孔径	PCB Hole Diameter [mm]	∅1.7		

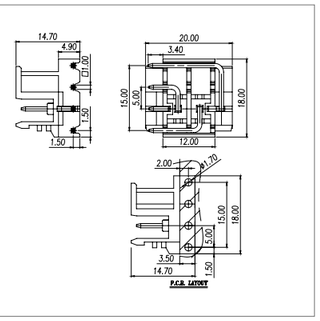

Pitch:5.0mm

WJ2EDGRF-5.0

UL/CUL 技术参数 UL/CUL Technical Data				
等级	Use Group	B	C	D
额定电压	Rated Voltage [V]	300	-	300
额定电流	Rated Current [A]	15	-	10
接线范围 Wire Range	单芯线 Solid [AWG]	/		
	多芯线 Stranded [AWG]	/		
耐电压	Dielectric Voltage-Withstand	1.6KV		
IEC 技术参数 IEC Technical Data				
过电压类别	Overvoltage Category	Ⅲ	Ⅲ	Ⅱ
污染等级	Contamination Class	3	2	2
额定电压	Rated Voltage [V]	250	320	630
额定电流	Rated Current [A]	20	20	20
额定冲击电压	Impulse withstand voltage [KV]	4	4	4
导线截面积 Conductor cross section	硬质导线 Solid[mm²]	/		
	柔性导线 Flexible[mm²]	/		
材料 Material				
绝缘材料	Insulation Material	PA66		
阻燃等级	Flame retardant rating	UL94V-0		
导体材料	Conductor Material	Copper alloy		
导体表面镀层	Plating of conductor surface	Sn plated		
一般参数 Other Data				
间距/极数	Pitch/Poles [mm]/[P]	5.0/2~4		
剥线长度	Stripping Length [mm]	/		
螺丝/扭矩	Screw/Torque(Max)[N.m]	/		
工作温度	Operating temperature[℃]	-40~+105		
焊锡温度	Soldering temperature	260℃ /5S		
引针尺寸	Pin dimensions [mm]	1.0*1.0		
PCB板孔径	PCB Hole Diameter [mm]	∅1.7		

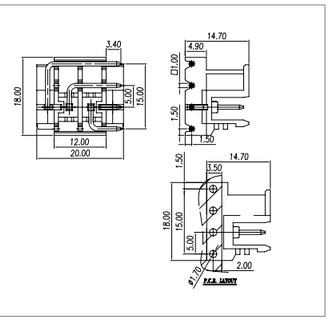

Pitch:5.0mm

WJ2EDGLF-THR-5.0

UL/CUL 技术参数 UL/CUL Technical Data				
等级	Use Group	B	C	D
额定电压	Rated Voltage [V]	300	-	300
额定电流	Rated Current [A]	16	-	10
接线范围 Wire Range	单芯线 Solid [AWG]	/		
	多芯线 Stranded [AWG]	/		
耐电压	Dielectric Voltage-Withstand	1.6KV		
IEC 技术参数 IEC Technical Data				
过电压类别	Overvoltage Category	Ⅲ	Ⅲ	Ⅱ
污染等级	Contamination Class	3	2	2
额定电压	Rated Voltage [V]	250	320	400
额定电流	Rated Current [A]	20	20	20
额定冲击电压	Impulse withstand voltage [KV]	4	4	4
导线截面积 Conductor cross section	硬质导线 Solid[mm²]	/		
	柔性导线 Flexible[mm²]	/		
材料 Material				
绝缘材料	Insulation Material	LCP		
阻燃等级	Flame retardant rating	UL94V-0		
导体材料	Conductor Material	Copper alloy		
导体表面镀层	Plating of conductor surface	Sn plated		
一般参数 Other Data				
间距/极数	Pitch/Poles [mm]/[P]	5.0/4		
剥线长度	Stripping Length [mm]	/		
螺丝/扭矩	Screw/Torque(Max)[N.m]	/		
工作温度	Operating temperature[℃]	-40~+130		
焊锡温度	Soldering temperature	285℃ /10S		
引针尺寸	Pin dimensions [mm]	1.0*1.0		
PCB板孔径	PCB Hole Diameter [mm]	∅1.5		

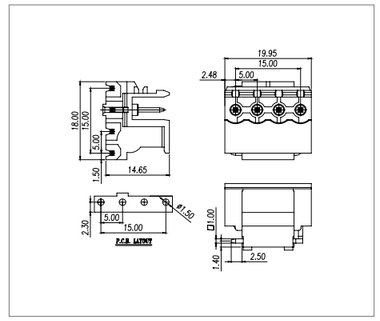

Pitch:5.0mm

WJ2EDGRF-THR-5.0

UL/CUL 技术参数 UL/CUL Technical Data				
等级	Use Group	B	C	D
额定电压	Rated Voltage [V]	300	-	300
额定电流	Rated Current [A]	16	-	10
接线范围 Wire Range	单芯线 Solid [AWG]	/		
	多芯线 Stranded [AWG]	/		
耐电压	Dielectric Voltage-Withstand	1.6KV		
IEC 技术参数 IEC Technical Data				
过电压类别	Overvoltage Category	Ⅲ	Ⅲ	Ⅱ
污染等级	Contamination Class	3	2	2
额定电压	Rated Voltage [V]	250	320	400
额定电流	Rated Current [A]	20	20	20
额定冲击电压	Impulse withstand voltage [KV]	4	4	4
导线截面积 Conductor cross section	硬质导线 Solid[mm²]	/		
	柔性导线 Flexible[mm²]	/		
材料 Material				
绝缘材料	Insulation Material	LCP		
阻燃等级	Flame retardant rating	UL94V-0		
导体材料	Conductor Material	Copper alloy		
导体表面镀层	Plating of conductor surface	Sn plated		
一般参数 Other Data				
间距/极数	Pitch/Poles [mm]/[P]	5.0/4		
剥线长度	Stripping Length [mm]	/		
螺丝/扭矩	Screw/Torque(Max)[N.m]	/		
工作温度	Operating temperature[℃]	-40~+130		
焊锡温度	Soldering temperature	285℃ /10S		
引针尺寸	Pin dimensions [mm]	1.0*1.0		
PCB板孔径	PCB Hole Diameter [mm]	∅1.5		

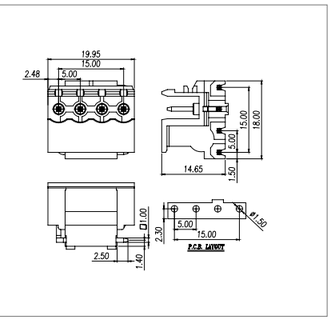

ISO14001 ISO45001 ISO9001 ISO80079-34 ISO/TS 22163

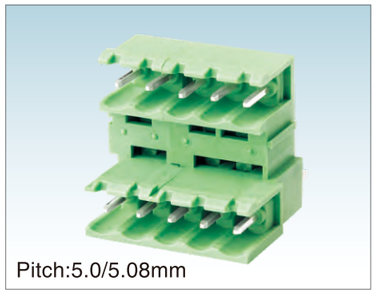

Pitch:5.0/5.08mm

WJ2EDGVT-5.0/5.08

UL/CUL 技术参数 UL/CUL Technical Data				
等级	Use Group	B	C	D
额定电压	Rated Voltage [V]	300	-	300
额定电流	Rated Current [A]	15	-	10
接线范围 Wire Range	单芯线 Solid [AWG]	/		
	多芯线 Stranded [AWG]	/		
耐电压	Dielectric Voltage-Withstand	1.6KV		
IEC 技术参数 IEC Technical Data				
过电压类别	Overvoltage Category	Ⅲ	Ⅲ	Ⅱ
污染等级	Contamination Class	3	2	2
额定电压	Rated Voltage [V]	250	320	400
额定电流	Rated Current [A]	10	10	10
额定冲击电压	Impulse withstand voltage [KV]	4	4	4
导线截面积 Conductor cross section	硬质导线 Solid[mm²]	/		
	柔性导线 Flexible[mm²]	/		
材料 Material				
绝缘材料	Insulation Material	PA66		
阻燃等级	Flame retardant rating	UL94V-0		
导体材料	Conductor Material	Copper alloy		
导体表面镀层	Plating of conductor surface	Sn plated		
一般参数 Other Data				
间距/极数	Pitch/Poles [mm]/[P]	5.0,5.08 2*2~2*24		
剥线长度	Stripping Length [mm]	/		
螺丝/扭矩	Screw/Torque(Max)[N.m]	/		
工作温度	Operating temperature[℃]	-40~+105		
焊锡温度	Soldering temperature	260℃ /5S		
引针尺寸	Pin dimensions [mm]	1.0*1.0		
PCB板孔径	PCB Hole Diameter [mm]	∅1.7		

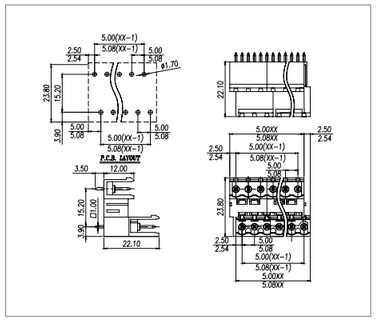



Pitch:5.0/5.08mm

WJ2EDGVTM-5.08

UL/CUL 技术参数 UL/CUL Technical Data				
等级	Use Group	B	C	D
额定电压	Rated Voltage [V]	300	-	300
额定电流	Rated Current [A]	15	-	10
接线范围 Wire Range	单芯线 Solid [AWG]	/		
	多芯线 Stranded [AWG]	/		
耐电压	Dielectric Voltage-Withstand	1.6KV		
IEC 技术参数 IEC Technical Data				
过电压类别	Overvoltage Category	Ⅲ	Ⅲ	Ⅱ
污染等级	Contamination Class	3	2	2
额定电压	Rated Voltage [V]	250	320	400
额定电流	Rated Current [A]	10	10	10
额定冲击电压	Impulse withstand voltage [KV]	4	4	4
导线截面积 Conductor cross section	硬质导线 Solid[mm²]	/		
	柔性导线 Flexible[mm²]	/		
材料 Material				
绝缘材料	Insulation Material	PA66		
阻燃等级	Flame retardant rating	UL94V-0		
导体材料	Conductor Material	Copper alloy		
导体表面镀层	Plating of conductor surface	Sn plated		
一般参数 Other Data				
间距/极数	Pitch/Poles [mm]/[P]	5.08/2*2~2*24		
剥线长度	Stripping Length [mm]	/		
螺丝/扭矩	Screw/Torque(Max)[N.m]	/		
工作温度	Operating temperature[℃]	-40~+105		
焊锡温度	Soldering temperature	260℃ /5S		
引针尺寸	Pin dimensions [mm]	1.0*1.0		
PCB板孔径	PCB Hole Diameter [mm]	∅1.7		

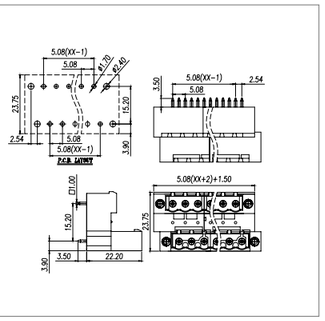

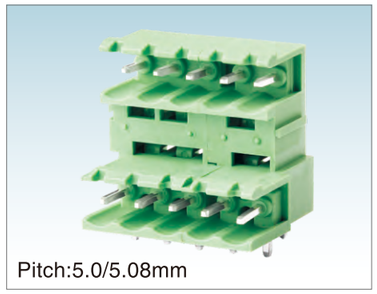

Pitch:5.0/5.08mm

WJ2EDGRT-5.0/5.08

UL/CUL 技术参数 UL/CUL Technical Data				
等级	Use Group	B	C	D
额定电压	Rated Voltage [V]	300	-	300
额定电流	Rated Current [A]	15	-	10
接线范围 Wire Range	单芯线 Solid [AWG]	/		
	多芯线 Stranded [AWG]	/		
耐电压	Dielectric Voltage-Withstand	1.6KV		
IEC 技术参数 IEC Technical Data				
过电压类别	Overvoltage Category	Ⅲ	Ⅲ	Ⅱ
污染等级	Contamination Class	3	2	2
额定电压	Rated Voltage [V]	250	320	400
额定电流	Rated Current [A]	10	10	10
额定冲击电压	Impulse withstand voltage [KV]	4	4	4
导线截面积 Conductor cross section	硬质导线 Solid[mm²]	/		
	柔性导线 Flexible[mm²]	/		
材料 Material				
绝缘材料	Insulation Material	PA66		
阻燃等级	Flame retardant rating	UL94V-0		
导体材料	Conductor Material	Copper alloy		
导体表面镀层	Plating of conductor surface	Sn plated		
一般参数 Other Data				
间距/极数	Pitch/Poles [mm]/[P]	5.0,5.08 2*2~2*24		
剥线长度	Stripping Length [mm]	/		
螺丝/扭矩	Screw/Torque(Max)[N.m]	/		
工作温度	Operating temperature[℃]	-40~+105		
焊锡温度	Soldering temperature	260℃ /5S		
引针尺寸	Pin dimensions [mm]	1.0*1.0		
PCB板孔径	PCB Hole Diameter [mm]	∅1.7		

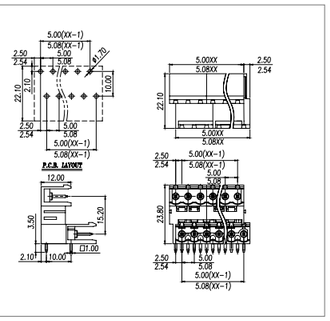

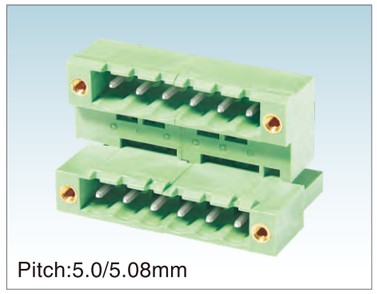

Pitch:5.0/5.08mm

WJ2EDGRTM-5.08

UL/CUL 技术参数 UL/CUL Technical Data				
等级	Use Group	B	C	D
额定电压	Rated Voltage [V]	300	-	300
额定电流	Rated Current [A]	15	-	10
接线范围 Wire Range	单芯线 Solid [AWG]	/		
	多芯线 Stranded [AWG]	/		
耐电压	Dielectric Voltage-Withstand	1.6KV		
IEC 技术参数 IEC Technical Data				
过电压类别	Overvoltage Category	Ⅲ	Ⅲ	Ⅱ
污染等级	Contamination Class	3	2	2
额定电压	Rated Voltage [V]	250	320	400
额定电流	Rated Current [A]	10	10	10
额定冲击电压	Impulse withstand voltage [KV]	4	4	4
导线截面积 Conductor cross section	硬质导线 Solid[mm²]	/		
	柔性导线 Flexible[mm²]	/		
材料 Material				
绝缘材料	Insulation Material	PA66		
阻燃等级	Flame retardant rating	UL94V-0		
导体材料	Conductor Material	Copper alloy		
导体表面镀层	Plating of conductor surface	Sn plated		
一般参数 Other Data				
间距/极数	Pitch/Poles [mm]/[P]	5.08/2*2~2*24		
剥线长度	Stripping Length [mm]	/		
螺丝/扭矩	Screw/Torque(Max)[N.m]	/		
工作温度	Operating temperature[℃]	-40~+105		
焊锡温度	Soldering temperature	260℃ /5S		
引针尺寸	Pin dimensions [mm]	1.0*1.0		
PCB板孔径	PCB Hole Diameter [mm]	∅1.7		

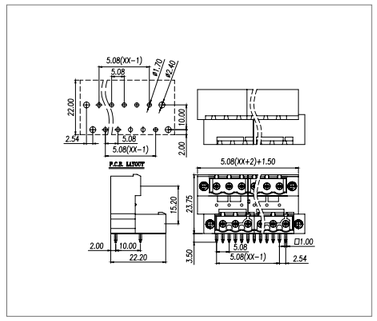

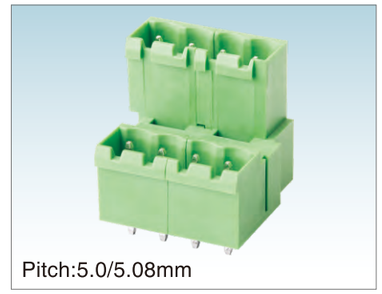

Pitch:5.0/5.08mm

WJ2EDGVTC-5.0/5.08

UL/CUL 技术参数 UL/CUL Technical Data				
等级	Use Group	B	C	D
额定电压	Rated Voltage [V]	300	-	300
额定电流	Rated Current [A]	15	-	10
接线范围 Wire Range	单芯线 Solid [AWG]	/		
	多芯线 Stranded [AWG]	/		
耐电压	Dielectric Voltage-Withstand	1.6KV		
IEC 技术参数 IEC Technical Data				
过电压类别	Overvoltage Category	Ⅲ	Ⅲ	Ⅱ
污染等级	Contamination Class	3	2	2
额定电压	Rated Voltage [V]	250	320	400
额定电流	Rated Current [A]	10	10	10
额定冲击电压	Impulse withstand voltage [KV]	4	4	4
导线截面积 Conductor cross section	硬质导线 Solid[mm²]	/		
	柔性导线 Flexible[mm²]	/		
材料 Material				
绝缘材料	Insulation Material	PA66		
阻燃等级	Flame retardant rating	UL94V-0		
导体材料	Conductor Material	Copper alloy		
导体表面镀层	Plating of conductor surface	Sn plated		
一般参数 Other Data				
间距/极数	Pitch/Poles [mm]/[P]	5.0,5.08 2*2~2*24		
剥线长度	Stripping Length [mm]	/		
螺丝/扭矩	Screw/Torque(Max)[N.m]	/		
工作温度	Operating temperature[℃]	-40~+105		
焊锡温度	Soldering temperature	260℃ /5S		
引针尺寸	Pin dimensions [mm]	1.0*1.0		
PCB板孔径	PCB Hole Diameter [mm]	∅1.7		

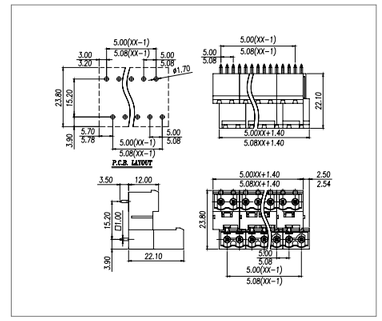

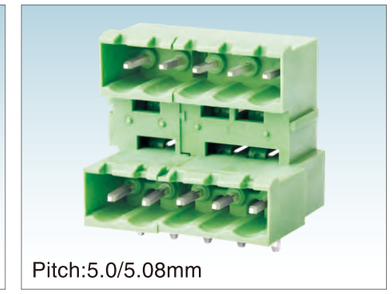

Pitch:5.0/5.08mm

WJ2EDGRTC-5.0/5.08

UL/CUL 技术参数 UL/CUL Technical Data				
等级	Use Group	B	C	D
额定电压	Rated Voltage [V]	300	-	300
额定电流	Rated Current [A]	15	-	10
接线范围 Wire Range	单芯线 Solid [AWG]	/		
	多芯线 Stranded [AWG]	/		
耐电压	Dielectric Voltage-Withstand	1.6KV		
IEC 技术参数 IEC Technical Data				
过电压类别	Overvoltage Category	Ⅲ	Ⅲ	Ⅱ
污染等级	Contamination Class	3	2	2
额定电压	Rated Voltage [V]	250	320	400
额定电流	Rated Current [A]	10	10	10
额定冲击电压	Impulse withstand voltage [KV]	4	4	4
导线截面积 Conductor cross section	硬质导线 Solid[mm²]	/		
	柔性导线 Flexible[mm²]	/		
材料 Material				
绝缘材料	Insulation Material	PA66		
阻燃等级	Flame retardant rating	UL94V-0		
导体材料	Conductor Material	Copper alloy		
导体表面镀层	Plating of conductor surface	Sn plated		
一般参数 Other Data				
间距/极数	Pitch/Poles [mm]/[P]	5.0,5.08/ 2*2~2*24		
剥线长度	Stripping Length [mm]	/		
螺丝/扭矩	Screw/Torque(Max)[N.m]	/		
工作温度	Operating temperature[℃]	-40~+105		
焊锡温度	Soldering temperature	260℃ /5S		
引针尺寸	Pin dimensions [mm]	1.0*1.0		
PCB板孔径	PCB Hole Diameter [mm]	∅1.7		

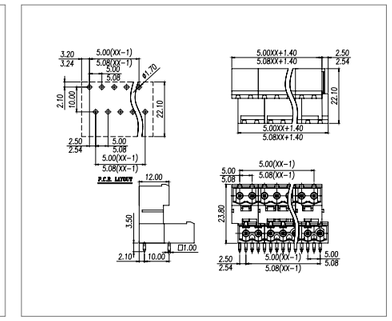



Pitch:5.0/5.08mm

WJ2EDGVH-5.0/5.08

UL/CUL 技术参数 UL/CUL Technical Data				
等级	Use Group	B	C	D
额定电压	Rated Voltage [V]	300	-	300
额定电流	Rated Current [A]	15	-	10
接线范围 Wire Range	单芯线 Solid [AWG]	/		
	多芯线 Stranded [AWG]	/		
耐电压	Dielectric Voltage-Withstand	1.6KV		
IEC 技术参数 IEC Technical Data				
过电压类别	Overvoltage Category	Ⅲ	Ⅲ	Ⅱ
污染等级	Contamination Class	3	2	2
额定电压	Rated Voltage [V]	250	320	630
额定电流	Rated Current [A]	10	10	10
额定冲击电压	Impulse withstand voltage [KV]	4	4	4
导线截面积 Conductor cross section	硬质导线 Solid[mm²]	/		
	柔性导线 Flexible[mm²]	/		
材料 Material				
绝缘材料	Insulation Material	PA66		
阻燃等级	Flame retardant rating	UL94V-0		
导体材料	Conductor Material	Copper alloy		
导体表面镀层	Plating of conductor surface	Sn plated		
一般参数 Other Data				
间距/极数	Pitch/Poles [mm]/[P]	5.0,5.08/ 2*2~2*24		
剥线长度	Stripping Length [mm]	/		
螺丝/扭矩	Screw/Torque(Max)[N.m]	/		
工作温度	Operating temperature[℃]	-40~+105		
焊锡温度	Soldering temperature	260℃ /5S		
引针尺寸	Pin dimensions [mm]	1.0*1.0		
PCB板孔径	PCB Hole Diameter [mm]	∅1.7		

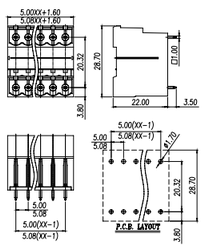



Pitch:5.0/5.08mm

WJ2EDGVHM-5.0/5.08

UL/CUL 技术参数 UL/CUL Technical Data				
等级	Use Group	B	C	D
额定电压	Rated Voltage [V]	300	-	300
额定电流	Rated Current [A]	15	-	10
接线范围 Wire Range	单芯线 Solid [AWG]	/		
	多芯线 Stranded [AWG]	/		
耐电压	Dielectric Voltage-Withstand	1.6KV		
IEC 技术参数 IEC Technical Data				
过电压类别	Overvoltage Category	Ⅲ	Ⅲ	Ⅱ
污染等级	Contamination Class	3	2	2
额定电压	Rated Voltage [V]	250	320	630
额定电流	Rated Current [A]	10	10	10
额定冲击电压	Impulse withstand voltage [KV]	4	4	4
导线截面积 Conductor cross section	硬质导线 Solid[mm²]	/		
	柔性导线 Flexible[mm²]	/		
材料 Material				
绝缘材料	Insulation Material	PA66		
阻燃等级	Flame retardant rating	UL94V-0		
导体材料	Conductor Material	Copper alloy		
导体表面镀层	Plating of conductor surface	Sn plated		
一般参数 Other Data				
间距/极数	Pitch/Poles [mm]/[P]	5.0,5.08/ 2*2~2*24		
剥线长度	Stripping Length [mm]	/		
螺丝/扭矩	Screw/Torque(Max)[N.m]	/		
工作温度	Operating temperature[℃]	-40~+105		
焊锡温度	Soldering temperature	260℃ /5S		
引针尺寸	Pin dimensions [mm]	1.0*1.0		
PCB板孔径	PCB Hole Diameter [mm]	∅1.7		

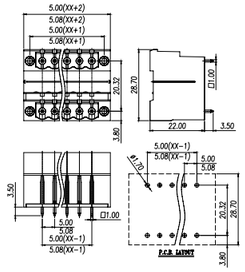



Pitch:5.0/5.08mm

WJ2EDGRH-5.0/5.08

UL/CUL 技术参数 UL/CUL Technical Data				
等级	Use Group	B	C	D
额定电压	Rated Voltage [V]	300	-	300
额定电流	Rated Current [A]	15	-	10
接线范围 Wire Range	单芯线 Solid [AWG]	/		
	多芯线 Stranded [AWG]	/		
耐电压	Dielectric Voltage-Withstand	1.6KV		
IEC 技术参数 IEC Technical Data				
过电压类别	Overvoltage Category	Ⅲ	Ⅲ	Ⅱ
污染等级	Contamination Class	3	2	2
额定电压	Rated Voltage [V]	250	320	630
额定电流	Rated Current [A]	10	10	10
额定冲击电压	Impulse withstand voltage [KV]	4	4	4
导线截面积 Conductor cross section	硬质导线 Solid[mm²]	/		
	柔性导线 Flexible[mm²]	/		
材料 Material				
绝缘材料	Insulation Material	PA66		
阻燃等级	Flame retardant rating	UL94V-0		
导体材料	Conductor Material	Copper alloy		
导体表面镀层	Plating of conductor surface	Sn plated		
一般参数 Other Data				
间距/极数	Pitch/Poles [mm]/[P]	5.0,5.08/ 2*2~2*24		
剥线长度	Stripping Length [mm]	/		
螺丝/扭矩	Screw/Torque(Max)[N.m]	/		
工作温度	Operating temperature[℃]	-40~+105		
焊锡温度	Soldering temperature	260℃ /5S		
引针尺寸	Pin dimensions [mm]	1.0*1.0		
PCB板孔径	PCB Hole Diameter [mm]	∅1.7		

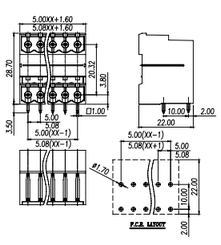



Pitch:5.0/5.08mm

WJ2EDGRHM-5.0/5.08

UL/CUL 技术参数 UL/CUL Technical Data				
等级	Use Group	B	C	D
额定电压	Rated Voltage [V]	300	-	300
额定电流	Rated Current [A]	15	-	10
接线范围 Wire Range	单芯线 Solid [AWG]	/		
	多芯线 Stranded [AWG]	/		
耐电压	Dielectric Voltage-Withstand	1.6KV		
IEC 技术参数 IEC Technical Data				
过电压类别	Overvoltage Category	Ⅲ	Ⅲ	Ⅱ
污染等级	Contamination Class	3	2	2
额定电压	Rated Voltage [V]	250	320	630
额定电流	Rated Current [A]	10	10	10
额定冲击电压	Impulse withstand voltage [KV]	4	4	4
导线截面积 Conductor cross section	硬质导线 Solid[mm²]	/		
	柔性导线 Flexible[mm²]	/		
材料 Material				
绝缘材料	Insulation Material	PA66		
阻燃等级	Flame retardant rating	UL94V-0		
导体材料	Conductor Material	Copper alloy		
导体表面镀层	Plating of conductor surface	Sn plated		
一般参数 Other Data				
间距/极数	Pitch/Poles [mm]/[P]	5.0,5.08/ 2*2~2*24		
剥线长度	Stripping Length [mm]	/		
螺丝/扭矩	Screw/Torque(Max)[N.m]	/		
工作温度	Operating temperature[℃]	-40~+105		
焊锡温度	Soldering temperature	260℃ /5S		
引针尺寸	Pin dimensions [mm]	1.0*1.0		
PCB板孔径	PCB Hole Diameter [mm]	∅1.7		

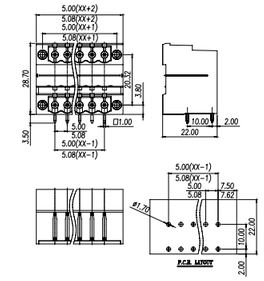



Pitch:5.0mm

WJ2EDGRHB-THR-5.0

UL/CUL 技术参数 UL/CUL Technical Data				
等级	Use Group	B	C	D
额定电压	Rated Voltage [V]	300	-	300
额定电流	Rated Current [A]	15	-	10
接线范围 Wire Range	单芯线 Solid [AWG]	/		
	多芯线 Stranded [AWG]	/		
耐电压	Dielectric Voltage-Withstand	1.6KV		
IEC 技术参数 IEC Technical Data				
过电压类别	Overvoltage Category	Ⅲ	Ⅲ	Ⅱ
污染等级	Contamination Class	3	2	2
额定电压	Rated Voltage [V]	250	320	400
额定电流	Rated Current [A]	12	12	12
额定冲击电压	Impulse withstand voltage [KV]	4	4	4
导线截面积 Conductor cross section	硬质导线 Solid[mm²]	/		
	柔性导线 Flexible[mm²]	/		
材料 Material				
绝缘材料	Insulation Material	LCP		
阻燃等级	Flame retardant rating	UL94V-0		
导体材料	Conductor Material	Copper alloy		
导体表面镀层	Plating of conductor surface	Sn plated		
一般参数 Other Data				
间距/极数	Pitch/Poles [mm]/[P]	5.0/2*2~2*24		
剥线长度	Stripping Length [mm]	/		
螺丝/扭矩	Screw/Torque(Max)[N.m]	/		
工作温度	Operating temperature[℃]	-40~+130		
焊锡温度	Soldering temperature	285℃ /10S		
引针尺寸	Pin dimensions [mm]	1.0*1.0		
PCB板孔径	PCB Hole Diameter [mm]	∅1.7		

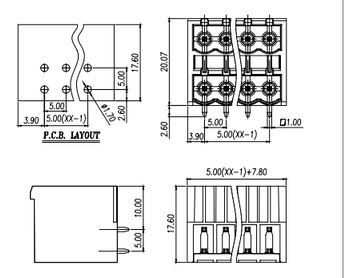



Pitch:5.0mm

WJ2EDGRHBM-THR-5.0

UL/CUL 技术参数 UL/CUL Technical Data				
等级	Use Group	B	C	D
额定电压	Rated Voltage [V]	300	-	300
额定电流	Rated Current [A]	15	-	10
接线范围 Wire Range	单芯线 Solid [AWG]	/		
	多芯线 Stranded [AWG]	/		
耐电压	Dielectric Voltage-Withstand	1.6KV		
IEC 技术参数 IEC Technical Data				
过电压类别	Overvoltage Category	Ⅲ	Ⅲ	Ⅱ
污染等级	Contamination Class	3	2	2
额定电压	Rated Voltage [V]	250	320	400
额定电流	Rated Current [A]	12	12	12
额定冲击电压	Impulse withstand voltage [KV]	4	4	4
导线截面积 Conductor cross section	硬质导线 Solid[mm²]	/		
	柔性导线 Flexible[mm²]	/		
材料 Material				
绝缘材料	Insulation Material	LCP		
阻燃等级	Flame retardant rating	UL94V-0		
导体材料	Conductor Material	Copper alloy		
导体表面镀层	Plating of conductor surface	Sn plated		
一般参数 Other Data				
间距/极数	Pitch/Poles [mm]/[P]	5.0/2*2~2*24		
剥线长度	Stripping Length [mm]	/		
螺丝/扭矩	Screw/Torque(Max)[N.m]	/		
工作温度	Operating temperature[℃]	-40~+130		
焊锡温度	Soldering temperature	285℃ /10S		
引针尺寸	Pin dimensions [mm]	1.0*1.0		
PCB板孔径	PCB Hole Diameter [mm]	∅1.7		

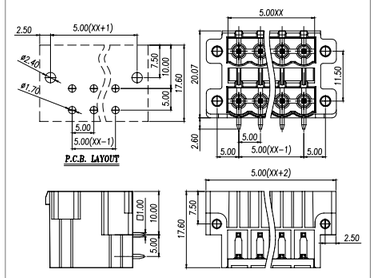

ISO14001 ISO45001 ISO9001 ISO80079-34 ISO/TS 22163

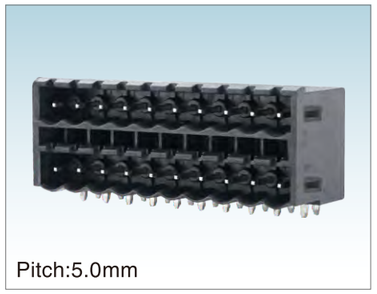

Pitch:5.0mm

WJ2EDGRHBN-THR-5.0

UL/CUL 技术参数 UL/CUL Technical Data				
等级	Use Group	B	C	D
额定电压	Rated Voltage [V]	300	-	300
额定电流	Rated Current [A]	15	-	10
接线范围 Wire Range	单芯线 Solid [AWG]	/		
	多芯线 Stranded [AWG]	/		
耐电压	Dielectric Voltage-Withstand	1.6KV		
IEC 技术参数 IEC Technical Data				
过电压类别	Overvoltage Category	Ⅲ	Ⅲ	Ⅱ
污染等级	Contamination Class	3	2	2
额定电压	Rated Voltage [V]	250	320	400
额定电流	Rated Current [A]	12	12	12
额定冲击电压	Impulse withstand voltage [KV]	4	4	4
导线截面积 Conductor cross section	硬质导线 Solid[mm²]	/		
	柔性导线 Flexible[mm²]	/		
材料 Material				
绝缘材料	Insulation Material	LCP		
阻燃等级	Flame retardant rating	UL94V-0		
导体材料	Conductor Material	Copper alloy		
导体表面镀层	Plating of conductor surface	Sn plated		
一般参数 Other Data				
间距/极数	Pitch/Poles [mm]/[P]	5.0/2*2~2*24		
剥线长度	Stripping Length [mm]	/		
螺丝/扭矩	Screw/Torque(Max)[N.m]	/		
工作温度	Operating temperature[℃]	-40~+130		
焊锡温度	Soldering temperature	285℃ /10S		
引针尺寸	Pin dimensions [mm]	1.0*1.0		
PCB板孔径	PCB Hole Diameter [mm]	∅1.7		

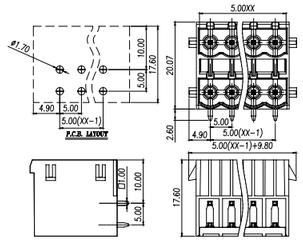

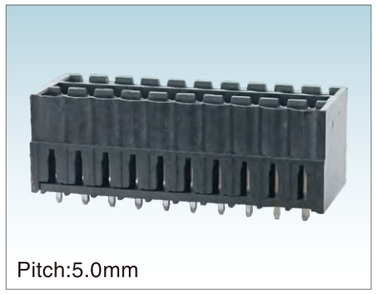

Pitch:5.0mm

WJ2EDGVHB-THR-5.0

UL/CUL 技术参数 UL/CUL Technical Data				
等级	Use Group	B	C	D
额定电压	Rated Voltage [V]	300	-	300
额定电流	Rated Current [A]	15	-	10
接线范围 Wire Range	单芯线 Solid [AWG]	/		
	多芯线 Stranded [AWG]	/		
耐电压	Dielectric Voltage-Withstand	1.6KV		
IEC 技术参数 IEC Technical Data				
过电压类别	Overvoltage Category	Ⅲ	Ⅲ	Ⅱ
污染等级	Contamination Class	3	2	2
额定电压	Rated Voltage [V]	250	320	400
额定电流	Rated Current [A]	12	12	12
额定冲击电压	Impulse withstand voltage [KV]	4	4	4
导线截面积 Conductor cross section	硬质导线 Solid[mm²]	/		
	柔性导线 Flexible[mm²]	/		
材料 Material				
绝缘材料	Insulation Material	LCP		
阻燃等级	Flame retardant rating	UL94V-0		
导体材料	Conductor Material	Copper alloy		
导体表面镀层	Plating of conductor surface	Sn plated		
一般参数 Other Data				
间距/极数	Pitch/Poles [mm]/[P]	5.0/2*2~2*24		
剥线长度	Stripping Length [mm]	/		
螺丝/扭矩	Screw/Torque(Max)[N.m]	/		
工作温度	Operating temperature[℃]	-40~+130		
焊锡温度	Soldering temperature	285℃ /10S		
引针尺寸	Pin dimensions [mm]	1.0*1.0		
PCB板孔径	PCB Hole Diameter [mm]	∅1.7		

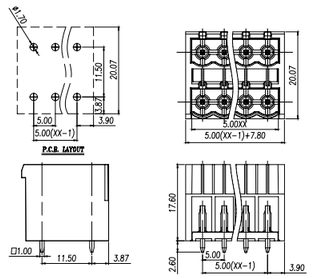

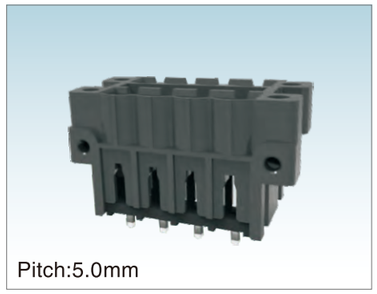

Pitch:5.0mm

WJ2EDGVHBM-THR-5.0

UL/CUL 技术参数 UL/CUL Technical Data				
等级	Use Group	B	C	D
额定电压	Rated Voltage [V]	300	-	300
额定电流	Rated Current [A]	15	-	10
接线范围 Wire Range	单芯线 Solid [AWG]	/		
	多芯线 Stranded [AWG]	/		
耐电压	Dielectric Voltage-Withstand	1.6KV		
IEC 技术参数 IEC Technical Data				
过电压类别	Overvoltage Category	Ⅲ	Ⅲ	Ⅱ
污染等级	Contamination Class	3	2	2
额定电压	Rated Voltage [V]	250	320	400
额定电流	Rated Current [A]	12	12	12
额定冲击电压	Impulse withstand voltage [KV]	4	4	4
导线截面积 Conductor cross section	硬质导线 Solid[mm²]	/		
	柔性导线 Flexible[mm²]	/		
材料 Material				
绝缘材料	Insulation Material	LCP		
阻燃等级	Flame retardant rating	UL94V-0		
导体材料	Conductor Material	Copper alloy		
导体表面镀层	Plating of conductor surface	Sn plated		
一般参数 Other Data				
间距/极数	Pitch/Poles [mm]/[P]	5.0/2*2~2*24		
剥线长度	Stripping Length [mm]	/		
螺丝/扭矩	Screw/Torque(Max)[N.m]	/		
工作温度	Operating temperature[℃]	-40~+130		
焊锡温度	Soldering temperature	285℃ /10S		
引针尺寸	Pin dimensions [mm]	1.0*1.0		
PCB板孔径	PCB Hole Diameter [mm]	∅1.7		

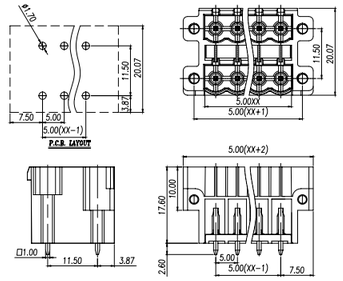

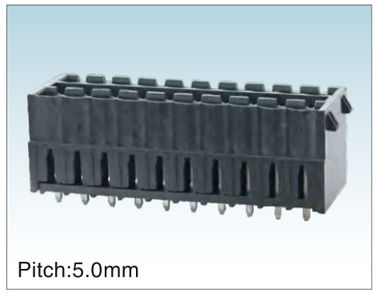

Pitch:5.0mm

WJ2EDGVHBN-THR-5.0

UL/CUL 技术参数 UL/CUL Technical Data				
等级	Use Group	B	C	D
额定电压	Rated Voltage [V]	300	-	300
额定电流	Rated Current [A]	15	-	10
接线范围 Wire Range	单芯线 Solid [AWG]	/		
	多芯线 Stranded [AWG]	/		
耐电压	Dielectric Voltage-Withstand	1.6KV		
IEC 技术参数 IEC Technical Data				
过电压类别	Overvoltage Category	Ⅲ	Ⅲ	Ⅱ
污染等级	Contamination Class	3	2	2
额定电压	Rated Voltage [V]	250	320	400
额定电流	Rated Current [A]	12	12	12
额定冲击电压	Impulse withstand voltage [KV]	4	4	4
导线截面积 Conductor cross section	硬质导线 Solid[mm²]	/		
	柔性导线 Flexible[mm²]	/		
材料 Material				
绝缘材料	Insulation Material	LCP		
阻燃等级	Flame retardant rating	UL94V-0		
导体材料	Conductor Material	Copper alloy		
导体表面镀层	Plating of conductor surface	Sn plated		
一般参数 Other Data				
间距/极数	Pitch/Poles [mm]/[P]	5.0/2*2~2*24		
剥线长度	Stripping Length [mm]	/		
螺丝/扭矩	Screw/Torque(Max)[N.m]	/		
工作温度	Operating temperature[℃]	-40~+130		
焊锡温度	Soldering temperature	285℃ /10S		
引针尺寸	Pin dimensions [mm]	1.0*1.0		
PCB板孔径	PCB Hole Diameter [mm]	∅1.7		

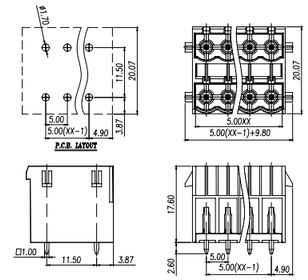

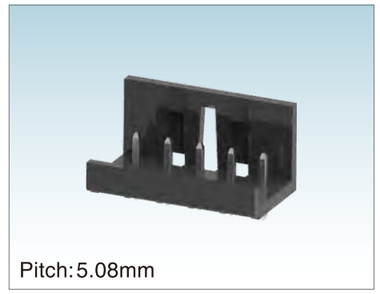

Pitch:5.08mm

WJ2EDGJ-5.08

UL/CUL 技术参数 UL/CUL Technical Data				
等级	Use Group	B	C	D
额定电压	Rated Voltage [V]	300	-	-
额定电流	Rated Current [A]	18	-	-
接线范围 Wire Range	单芯线 Solid [AWG]	/		
	多芯线 Stranded [AWG]	/		
耐电压	Dielectric Voltage-Withstand	1.6KV		
IEC 技术参数 IEC Technical Data				
过电压类别	Overvoltage Category	Ⅲ	Ⅲ	Ⅱ
污染等级	Contamination Class	3	2	2
额定电压	Rated Voltage [V]	250	320	400
额定电流	Rated Current [A]	12	12	12
额定冲击电压	Impulse withstand voltage [KV]	4	4	4
导线截面积 Conductor cross section	硬质导线 Solid[mm²]	/		
	柔性导线 Flexible[mm²]	/		
材料 Material				
绝缘材料	Insulation Material	PA66		
阻燃等级	Flame retardant rating	UL94V-0		
导体材料	Conductor Material	Copper alloy		
导体表面镀层	Plating of conductor surface	Sn plated		
一般参数 Other Data				
间距/极数	Pitch/Poles [mm]/[P]	5.08/2-24		
剥线长度	Stripping Length [mm]	/		
螺丝/扭矩	Screw/Torque(Max)[N.m]	/		
工作温度	Operating temperature[℃]	-40~+105		
焊锡温度	Soldering temperature	260℃ /5S		
引针尺寸	Pin dimensions [mm]	1.0*1.0		
PCB板孔径	PCB Hole Diameter [mm]	∅1.7		

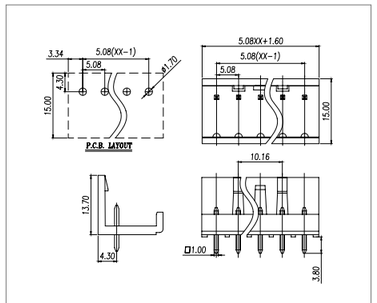

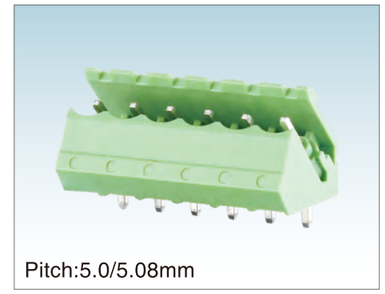

Pitch:5.0/5.08mm

WJ2EDGL-5.0/5.08

UL/CUL 技术参数 UL/CUL Technical Data				
等级	Use Group	B	C	D
额定电压	Rated Voltage [V]	300	-	300
额定电流	Rated Current [A]	15	-	10
接线范围 Wire Range	单芯线 Solid [AWG]	/		
	多芯线 Stranded [AWG]	/		
耐电压	Dielectric Voltage-Withstand	1.6KV		
IEC 技术参数 IEC Technical Data				
过电压类别	Overvoltage Category	Ⅲ	Ⅲ	Ⅱ
污染等级	Contamination Class	3	2	2
额定电压	Rated Voltage [V]	250	320	400
额定电流	Rated Current [A]	12	12	12
额定冲击电压	Impulse withstand voltage [KV]	4	4	4
导线截面积 Conductor cross section	硬质导线 Solid[mm²]	/		
	柔性导线 Flexible[mm²]	/		
材料 Material				
绝缘材料	Insulation Material	PA66		
阻燃等级	Flame retardant rating	UL94V-0		
导体材料	Conductor Material	Copper alloy		
导体表面镀层	Plating of conductor surface	Sn plated		
一般参数 Other Data				
间距/极数	Pitch/Poles [mm]/[P]	5.0,5.08/2~24		
剥线长度	Stripping Length [mm]	/		
螺丝/扭矩	Screw/Torque(Max)[N.m]	/		
工作温度	Operating temperature[℃]	-40~+105		
焊锡温度	Soldering temperature	260℃ /5S		
引针尺寸	Pin dimensions [mm]	1.0*1.0		
PCB板孔径	PCB Hole Diameter [mm]	∅1.7		

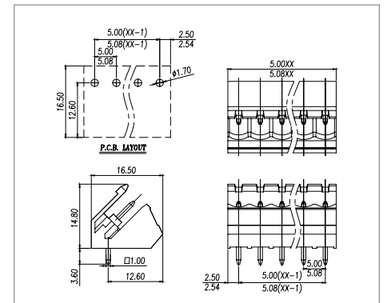

ISO14001 ISO45001 ISO9001 ISO80079-34 ISO/TS 22163

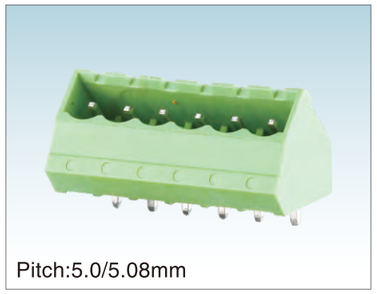

Pitch:5.0/5.08mm

WJ2EDGLC-5.0/5.08

UL/CUL 技术参数 UL/CUL Technical Data				
等级	Use Group	B	C	D
额定电压	Rated Voltage [V]	300	-	300
额定电流	Rated Current [A]	15	-	10
接线范围 Wire Range	单芯线 Solid [AWG]	/		
	多芯线 Stranded [AWG]	/		
耐电压	Dielectric Voltage-Withstand	1.6KV		
IEC 技术参数 IEC Technical Data				
过电压类别	Overvoltage Category	Ⅲ	Ⅲ	Ⅱ
污染等级	Contamination Class	3	2	2
额定电压	Rated Voltage [V]	250	320	400
额定电流	Rated Current [A]	12	12	12
额定冲击电压	Impulse withstand voltage [KV]	4	4	4
导线截面积 Conductor cross section	硬质导线 Solid[mm²]	/		
	柔性导线 Flexible[mm²]	/		
材料 Material				
绝缘材料	Insulation Material	PA66		
阻燃等级	Flame retardant rating	UL94V-0		
导体材料	Conductor Material	Copper alloy		
导体表面镀层	Plating of conductor surface	Sn plated		
一般参数 Other Data				
间距/极数	Pitch/Poles [mm]/[P]	5.0,5.08/2~24		
剥线长度	Stripping Length [mm]	/		
螺丝/扭矩	Screw/Torque(Max)[N.m]	/		
工作温度	Operating temperature[℃]	-40~+105		
焊锡温度	Soldering temperature	260℃ /5S		
引针尺寸	Pin dimensions [mm]	1.0*1.0		
PCB板孔径	PCB Hole Diameter [mm]	∅1.7		

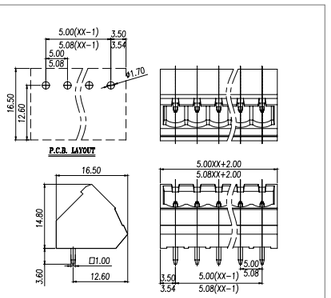

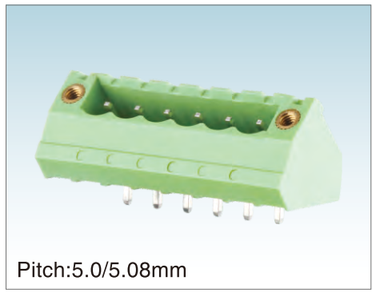

Pitch:5.0/5.08mm

WJ2EDGLM-5.0/5.08

UL/CUL 技术参数 UL/CUL Technical Data				
等级	Use Group	B	C	D
额定电压	Rated Voltage [V]	300	-	300
额定电流	Rated Current [A]	15	-	10
接线范围 Wire Range	单芯线 Solid [AWG]	/		
	多芯线 Stranded [AWG]	/		
耐电压	Dielectric Voltage-Withstand	1.6KV		
IEC 技术参数 IEC Technical Data				
过电压类别	Overvoltage Category	Ⅲ	Ⅲ	Ⅱ
污染等级	Contamination Class	3	2	2
额定电压	Rated Voltage [V]	250	320	400
额定电流	Rated Current [A]	12	12	12
额定冲击电压	Impulse withstand voltage [KV]	4	4	4
导线截面积 Conductor cross section	硬质导线 Solid[mm²]	/		
	柔性导线 Flexible[mm²]	/		
材料 Material				
绝缘材料	Insulation Material	PA66		
阻燃等级	Flame retardant rating	UL94V-0		
导体材料	Conductor Material	Copper alloy		
导体表面镀层	Plating of conductor surface	Sn plated		
一般参数 Other Data				
间距/极数	Pitch/Poles [mm]/[P]	5.0,5.08/2~24		
剥线长度	Stripping Length [mm]	/		
螺丝/扭矩	Screw/Torque(Max)[N.m]	/		
工作温度	Operating temperature[℃]	-40~+105		
焊锡温度	Soldering temperature	260℃ /5S		
引针尺寸	Pin dimensions [mm]	1.0*1.0		
PCB板孔径	PCB Hole Diameter [mm]	∅1.7		

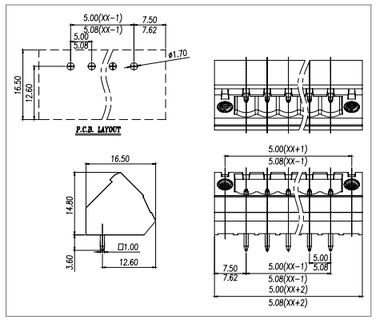

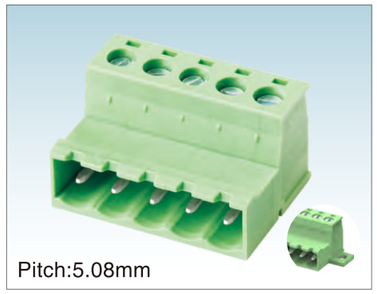

Pitch:5.08mm

WJ2EDGKR-5.08

UL/CUL 技术参数 UL/CUL Technical Data				
等级	Use Group	B	C	D
额定电压	Rated Voltage [V]	300	-	300
额定电流	Rated Current [A]	15	-	10
接线范围 Wire Range	单芯线 Solid [AWG]	28~12		
	多芯线 Stranded [AWG]	28~12		
耐电压	Dielectric Voltage-Withstand	1.6KV		
IEC 技术参数 IEC Technical Data				
过电压类别	Overvoltage Category	Ⅲ	Ⅲ	Ⅱ
污染等级	Contamination Class	3	2	2
额定电压	Rated Voltage [V]	250	320	630
额定电流	Rated Current [A]	12	12	12
额定冲击电压	Impulse withstand voltage [KV]	4	4	4
导线截面积 Conductor cross section	硬质导线 Solid[mm²]	0.2~2.5		
	柔性导线 Flexible[mm²]	0.2~2.5		
材料 Material				
绝缘材料	Insulation Material	PA66		
阻燃等级	Flame retardant rating	UL94V-0		
导体材料	Conductor Material	Copper alloy		
导体表面镀层	Plating of conductor surface	Sn plated		
一般参数 Other Data				
间距/极数	Pitch/Poles [mm]/[P]	5.08/2~24		
剥线长度	Stripping Length [mm]	7-8		
螺丝/扭矩	Screw/Torque(Max)[N.m]	M3/0.5		
工作温度	Operating temperature[℃]	-40~+105		
焊锡温度	Soldering temperature	/		
引针尺寸	Pin dimensions [mm]	/		
PCB板孔径	PCB Hole Diameter [mm]	/		

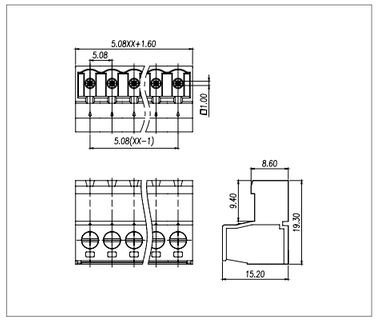



Pitch:5.08mm

WJ2EDGKRM-5.08

UL/CUL 技术参数 UL/CUL Technical Data				
等级	Use Group	B	C	D
额定电压	Rated Voltage [V]	300	-	300
额定电流	Rated Current [A]	15	-	10
接线范围 Wire Range	单芯线 Solid [AWG]	28~12		
	多芯线 Stranded [AWG]	28~12		
耐电压	Dielectric Voltage-Withstand	1.6KV		
IEC 技术参数 IEC Technical Data				
过电压类别	Overvoltage Category	Ⅲ	Ⅲ	Ⅱ
污染等级	Contamination Class	3	2	2
额定电压	Rated Voltage [V]	250	320	630
额定电流	Rated Current [A]	12	12	12
额定冲击电压	Impulse withstand voltage [KV]	4	4	4
导线截面积 Conductor cross section	硬质导线 Solid[mm²]	0.2~2.5		
	柔性导线 Flexible[mm²]	0.2~2.5		
材料 Material				
绝缘材料	Insulation Material	PA66		
阻燃等级	Flame retardant rating	UL94V-0		
导体材料	Conductor Material	Copper alloy		
导体表面镀层	Plating of conductor surface	Sn plated		
一般参数 Other Data				
间距/极数	Pitch/Poles [mm]/[P]	5.08/2~24		
剥线长度	Stripping Length [mm]	7-8		
螺丝/扭矩	Screw/Torque(Max)[N.m]	M3/0.5		
工作温度	Operating temperature[℃]	-40~+105		
焊锡温度	Soldering temperature	/		
引针尺寸	Pin dimensions [mm]	/		
PCB板孔径	PCB Hole Diameter [mm]	/		

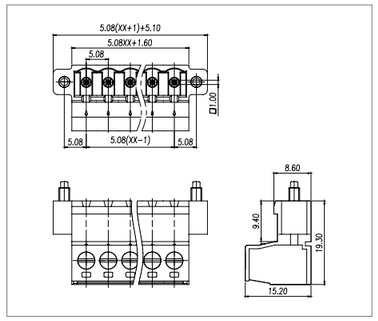



Pitch:5.08mm

WJ2EDGKRN-5.08

UL/CUL 技术参数 UL/CUL Technical Data				
等级	Use Group	B	C	D
额定电压	Rated Voltage [V]	300	-	300
额定电流	Rated Current [A]	15	-	10
接线范围 Wire Range	单芯线 Solid [AWG]	28~12		
	多芯线 Stranded [AWG]	28~12		
耐电压	Dielectric Voltage-Withstand	1.6KV		
IEC 技术参数 IEC Technical Data				
过电压类别	Overvoltage Category	Ⅲ	Ⅲ	Ⅱ
污染等级	Contamination Class	3	2	2
额定电压	Rated Voltage [V]	250	320	630
额定电流	Rated Current [A]	12	12	12
额定冲击电压	Impulse withstand voltage [KV]	4	4	4
导线截面积 Conductor cross section	硬质导线 Solid[mm²]	0.2~2.5		
	柔性导线 Flexible[mm²]	0.2~2.5		
材料 Material				
绝缘材料	Insulation Material	PA66		
阻燃等级	Flame retardant rating	UL94V-0		
导体材料	Conductor Material	Copper alloy		
导体表面镀层	Plating of conductor surface	Sn plated		
一般参数 Other Data				
间距/极数	Pitch/Poles [mm]/[P]	5.08/2~24		
剥线长度	Stripping Length [mm]	7~8		
螺丝/扭矩	Screw/Torque(Max)[N.m]	M3/0.5		
工作温度	Operating temperature[℃]	-40~+105		
焊锡温度	Soldering temperature	/		
引针尺寸	Pin dimensions [mm]	/		
PCB板孔径	PCB Hole Diameter [mm]	/		

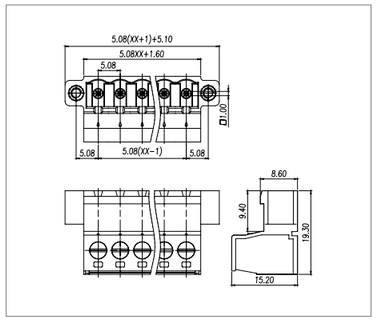

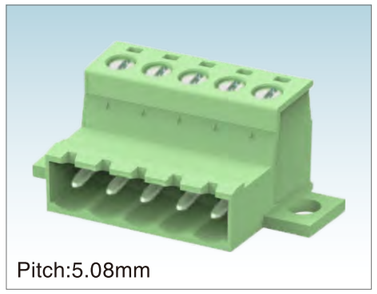

Pitch:5.08mm

WJ2EDGKRL-5.08

UL/CUL 技术参数 UL/CUL Technical Data				
等级	Use Group	B	C	D
额定电压	Rated Voltage [V]	300	-	300
额定电流	Rated Current [A]	15	-	10
接线范围 Wire Range	单芯线 Solid [AWG]	28~12		
	多芯线 Stranded [AWG]	28~12		
耐电压	Dielectric Voltage-Withstand	1.6KV		
IEC 技术参数 IEC Technical Data				
过电压类别	Surge voltage category	Ⅲ	Ⅲ	Ⅱ
污染等级	Contamination Class	3	2	2
额定电压	Rated Voltage [V]	250	320	630
额定电流	Rated Current [A]	12	12	12
额定冲击电压	Impulse withstand voltage [KV]	4	4	4
导线截面积 Conductor cross section	硬质导线 Solid[mm²]	0.2-2.5		
	柔性导线 Flexible[mm²]	0.2-2.5		
材料 Material				
绝缘材料	Insulation Material	PA66		
阻燃等级	Inflammability Class	UL94V-0		
导体材料	Conductor Material	Copper alloy		
导体表面镀层	Conductor Plating	Sn plated		
一般参数 Other Data				
间距/极数	Pitch/Poles [mm]/[P]	5.08/2-24		
剥线长度	Stripping Length [mm]	7-8		
螺丝/扭矩	Screw/Torque(Max)[N.m]	M3/0.5		
工作温度	Operating temperature[℃]	-40~+105		
焊锡温度	Soldering temperature	/		
引针尺寸	Pin dimensions [mm]	/		
PCB板孔径	PCB Hole Diameter [mm]	/		

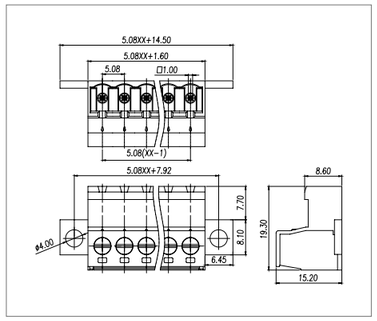

ISO14001 ISO45001 ISO9001 ISO80079-34 ISO/TS 22163

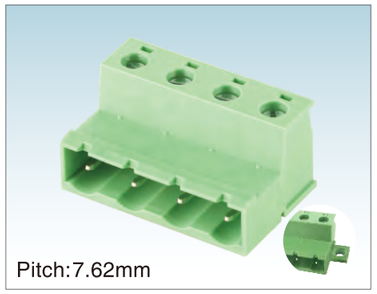

Pitch:7.62mm

WJ2EDGKR-7.62

UL/CUL 技术参数 UL/CUL Technical Data				
等级	Use Group	B	C	D
额定电压	Rated Voltage [V]	300	-	300
额定电流	Rated Current [A]	15	-	10
接线范围 Wire Range	单芯线 Solid [AWG]	28~12		
	多芯线 Stranded [AWG]	28~12		
耐电压	Dielectric Voltage-Withstand	1.6KV		
IEC 技术参数 IEC Technical Data				
过电压类别	Overvoltage Category	Ⅲ	Ⅲ	Ⅱ
污染等级	Contamination Class	3	2	2
额定电压	Rated Voltage [V]	400	630	1000
额定电流	Rated Current [A]	12	12	12
额定冲击电压	Impulse withstand voltage [KV]	6	6	6
导线截面积 Conductor cross section	硬质导线 Solid[mm²]	0.2~2.5		
	柔性导线 Flexible[mm²]	0.2~2.5		
材料 Material				
绝缘材料	Insulation Material	PA66		
阻燃等级	Flame retardant rating	UL94V-0		
导体材料	Conductor Material	Copper alloy		
导体表面镀层	Plating of conductor surface	Sn plated		
一般参数 Other Data				
间距/极数	Pitch/Poles [mm]/[P]	7.62/2~24		
剥线长度	Stripping Length [mm]	7~8		
螺丝/扭矩	Screw/Torque(Max)[N.m]	M3/0.5		
工作温度	Operating temperature[℃]	-40~+105		
焊锡温度	Soldering temperature	/		
引针尺寸	Pin dimensions [mm]	/		
PCB板孔径	PCB Hole Diameter [mm]	/		

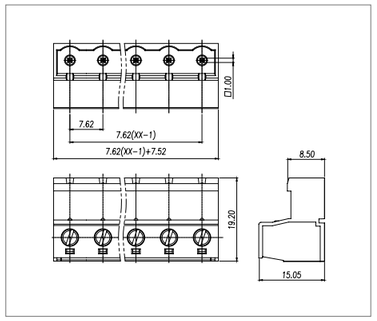

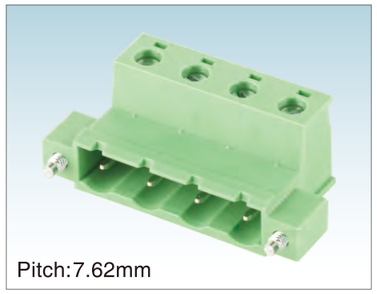

Pitch:7.62mm

WJ2EDGKRM-7.62

UL/CUL 技术参数 UL/CUL Technical Data				
等级	Use Group	B	C	D
额定电压	Rated Voltage [V]	300	-	300
额定电流	Rated Current [A]	15	-	10
接线范围 Wire Range	单芯线 Solid [AWG]	28~12		
	多芯线 Stranded [AWG]	28~12		
耐电压	Dielectric Voltage-Withstand	1.6KV		
IEC 技术参数 IEC Technical Data				
过电压类别	Overvoltage Category	Ⅲ	Ⅲ	Ⅱ
污染等级	Contamination Class	3	2	2
额定电压	Rated Voltage [V]	400	630	1000
额定电流	Rated Current [A]	12	12	12
额定冲击电压	Impulse withstand voltage [KV]	6	6	6
导线截面积 Conductor cross section	硬质导线 Solid[mm²]	0.2~2.5		
	柔性导线 Flexible[mm²]	0.2~2.5		
材料 Material				
绝缘材料	Insulation Material	PA66		
阻燃等级	Flame retardant rating	UL94V-0		
导体材料	Conductor Material	Copper alloy		
导体表面镀层	Plating of conductor surface	Sn plated		
一般参数 Other Data				
间距/极数	Pitch/Poles [mm]/[P]	7.62/2~24		
剥线长度	Stripping Length [mm]	7~8		
螺丝/扭矩	Screw/Torque(Max)[N.m]	M3/0.5		
工作温度	Operating temperature[℃]	-40~+105		
焊锡温度	Soldering temperature	/		
引针尺寸	Pin dimensions [mm]	/		
PCB板孔径	PCB Hole Diameter [mm]	/		

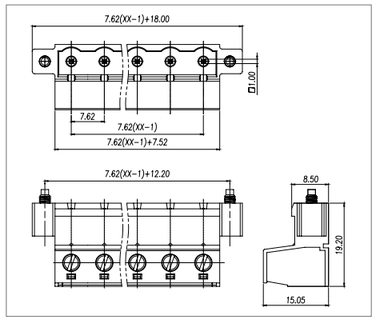

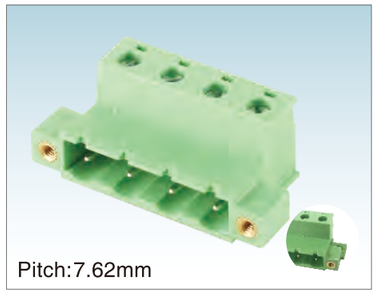

Pitch:7.62mm

WJ2EDGKRN-7.62

UL/CUL 技术参数 UL/CUL Technical Data				
等级	Use Group	B	C	D
额定电压	Rated Voltage [V]	300	-	300
额定电流	Rated Current [A]	15	-	10
接线范围 Wire Range	单芯线 Solid [AWG]	28~12		
	多芯线 Stranded [AWG]	28~12		
耐电压	Dielectric Voltage-Withstand	1.6KV		
IEC 技术参数 IEC Technical Data				
过电压类别	Overvoltage Category	Ⅲ	Ⅲ	Ⅱ
污染等级	Contamination Class	3	2	2
额定电压	Rated Voltage [V]	400	630	1000
额定电流	Rated Current [A]	12	12	12
额定冲击电压	Impulse withstand voltage [KV]	6	6	6
导线截面积 Conductor cross section	硬质导线 Solid[mm²]	0.2~2.5		
	柔性导线 Flexible[mm²]	0.2~2.5		
材料 Material				
绝缘材料	Insulation Material	PA66		
阻燃等级	Flame retardant rating	UL94V-0		
导体材料	Conductor Material	Copper alloy		
导体表面镀层	Plating of conductor surface	Sn plated		
一般参数 Other Data				
间距/极数	Pitch/Poles [mm]/[P]	7.62/2~24		
剥线长度	Stripping Length [mm]	7~8		
螺丝/扭矩	Screw/Torque(Max)[N.m]	M3/0.5		
工作温度	Operating temperature[℃]	-40~+105		
焊锡温度	Soldering temperature	/		
引针尺寸	Pin dimensions [mm]	/		
PCB板孔径	PCB Hole Diameter [mm]	/		

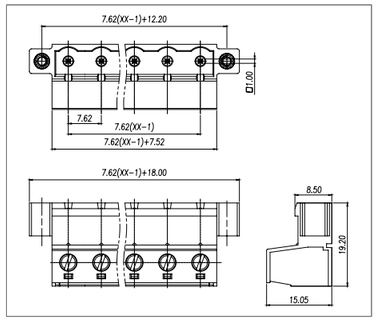



Pitch:5.0/5.08mm

WJ2EDGKDR-5.0/5.08

UL/CUL 技术参数 UL/CUL Technical Data				
等级	Use Group	B	C	D
额定电压	Rated Voltage [V]	300	-	300
额定电流	Rated Current [A]	10	-	10
接线范围 Wire Range	单芯线 Solid [AWG]	28~12		
	多芯线 Stranded [AWG]	28~12		
耐电压	Dielectric Voltage-Withstand	1.6KV		
IEC 技术参数 IEC Technical Data				
过电压类别	Overvoltage Category	Ⅲ	Ⅲ	Ⅱ
污染等级	Contamination Class	3	2	2
额定电压	Rated Voltage [V]	320	320	630
额定电流	Rated Current [A]	12	12	12
额定冲击电压	Impulse withstand voltage [KV]	4	4	4
导线截面积 Conductor cross section	硬质导线 Solid[mm²]	0.2~2.5		
	柔性导线 Flexible[mm²]	0.2~2.5		
材料 Material				
绝缘材料	Insulation Material	PA66		
阻燃等级	Flame retardant rating	UL94V-0		
导体材料	Conductor Material	Copper alloy		
导体表面镀层	Plating of conductor surface	Sn plated		
一般参数 Other Data				
间距/极数	Pitch/Poles [mm]/[P]	5.0,5.08/2~24		
剥线长度	Stripping Length [mm]	9-10		
螺丝/扭矩	Screw/Torque(Max)[N.m]	/		
工作温度	Operating temperature[℃]	-40~+105		
焊锡温度	Soldering temperature	/		
引针尺寸	Pin dimensions [mm]	/		
PCB板孔径	PCB Hole Diameter [mm]	/		

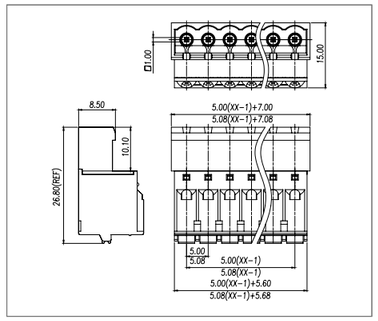

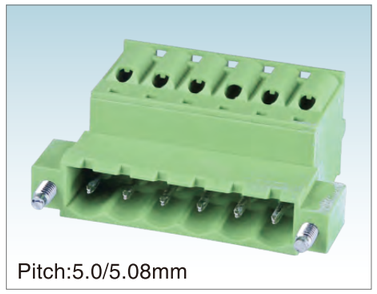

Pitch:5.0/5.08mm

WJ2EDGKDRM-5.0/5.08

UL/CUL 技术参数 UL/CUL Technical Data				
等级	Use Group	B	C	D
额定电压	Rated Voltage [V]	300	-	300
额定电流	Rated Current [A]	10	-	10
接线范围 Wire Range	单芯线 Solid [AWG]	28~12		
	多芯线 Stranded [AWG]	28~12		
耐电压	Dielectric Voltage-Withstand	1.6KV		
IEC 技术参数 IEC Technical Data				
过电压类别	Overvoltage Category	Ⅲ	Ⅲ	Ⅱ
污染等级	Contamination Class	3	2	2
额定电压	Rated Voltage [V]	320	320	630
额定电流	Rated Current [A]	12	12	12
额定冲击电压	Impulse withstand voltage [KV]	4	4	4
导线截面积 Conductor cross section	硬质导线 Solid[mm²]	0.2~2.5		
	柔性导线 Flexible[mm²]	0.2~2.5		
材料 Material				
绝缘材料	Insulation Material	PA66		
阻燃等级	Flame retardant rating	UL94V-0		
导体材料	Conductor Material	Copper alloy		
导体表面镀层	Plating of conductor surface	Sn plated		
一般参数 Other Data				
间距/极数	Pitch/Poles [mm]/[P]	5.0,5.08/2~24		
剥线长度	Stripping Length [mm]	9-10		
螺丝/扭矩	Screw/Torque(Max)[N.m]	/		
工作温度	Operating temperature[℃]	-40~+105		
焊锡温度	Soldering temperature	/		
引针尺寸	Pin dimensions [mm]	/		
PCB板孔径	PCB Hole Diameter [mm]	/		

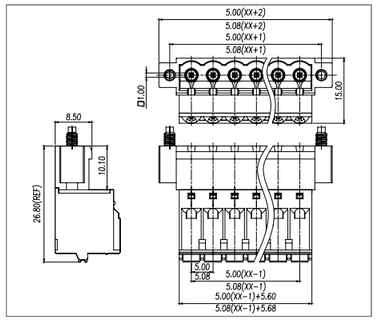



Pitch:5.0/5.08mm

WJ2EDGKDRN-5.0/5.08

UL/CUL 技术参数 UL/CUL Technical Data				
等级	Use Group	B	C	D
额定电压	Rated Voltage [V]	300	-	300
额定电流	Rated Current [A]	10	-	10
接线范围 Wire Range	单芯线 Solid [AWG]	28~12		
	多芯线 Stranded [AWG]	28~12		
耐电压	Dielectric Voltage-Withstand	1.6KV		
IEC 技术参数 IEC Technical Data				
过电压类别	Overvoltage Category	Ⅲ	Ⅲ	Ⅱ
污染等级	Contamination Class	3	2	2
额定电压	Rated Voltage [V]	320	320	630
额定电流	Rated Current [A]	12	12	12
额定冲击电压	Impulse withstand voltage [KV]	4	4	4
导线截面积 Conductor cross section	硬质导线 Solid[mm²]	0.2~2.5		
	柔性导线 Flexible[mm²]	0.2~2.5		
材料 Material				
绝缘材料	Insulation Material	PA66		
阻燃等级	Flame retardant rating	UL94V-0		
导体材料	Conductor Material	Copper alloy		
导体表面镀层	Plating of conductor surface	Sn plated		
一般参数 Other Data				
间距/极数	Pitch/Poles [mm]/[P]	5.0,5.08/2~24		
剥线长度	Stripping Length [mm]	9-10		
螺丝/扭矩	Screw/Torque(Max)[N.m]	/		
工作温度	Operating temperature[℃]	-40~+105		
焊锡温度	Soldering temperature	/		
引针尺寸	Pin dimensions [mm]	/		
PCB板孔径	PCB Hole Diameter [mm]	/		

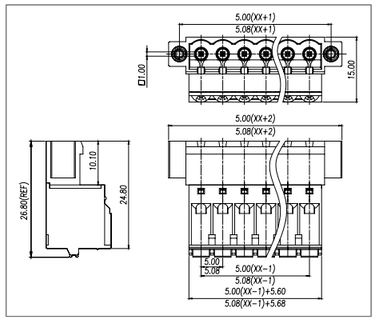

ISO14001 ISO45001 ISO9001 ISO80079-34 ISO/TS 22163



Pitch:5.0/5.08mm

WJ2EDGKDRG-5.0/5.08

UL/CUL 技术参数 UL/CUL Technical Data				
等级	Use Group	B	C	D
额定电压	Rated Voltage [V]	300	-	300
额定电流	Rated Current [A]	10	-	10
接线范围 Wire Range	单芯线 Solid [AWG]	28~12		
	多芯线 Stranded [AWG]	28~12		
耐电压	Dielectric Voltage-Withstand	1.6KV		

IEC 技术参数 IEC Technical Data				
过电压类别	Overvoltage Category	Ⅲ	Ⅲ	Ⅱ
污染等级	Contamination Class	3	2	2
额定电压	Rated Voltage [V]	320	320	630
额定电流	Rated Current [A]	12	12	12
额定冲击电压	Impulse withstand voltage [KV]	4	4	4
导线截面积 Conductor cross section	硬质导线 Solid[mm²]	0.2~2.5		
	柔性导线 Flexible[mm²]	0.2~2.5		

材料 Material		
绝缘材料	Insulation Material	PA66
阻燃等级	Flame retardant rating	UL94V-0
导体材料	Conductor Material	Copper alloy
导体表面镀层	Plating of conductor surface	Sn plated

一般参数 Other Data		
间距/极数	Pitch/Poles [mm]/[P]	5.0,5.08/2~24
剥线长度	Stripping Length [mm]	9-10
螺丝/扭矩	Screw/Torque(Max)[N.m]	/
工作温度	Operating temperature[℃]	-40~+105
焊锡温度	Soldering temperature	/
引针尺寸	Pin dimensions [mm]	/
PCB板孔径	PCB Hole Diameter [mm]	/

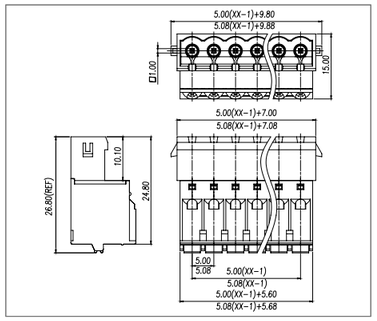



Pitch:5.08mm

WJ2EDGKRZ-5.08

UL/CUL 技术参数 UL/CUL Technical Data				
等级	Use Group	B	C	D
额定电压	Rated Voltage [V]	300	-	300
额定电流	Rated Current [A]	15	-	10
接线范围 Wire Range	单芯线 Solid [AWG]	28~12		
	多芯线 Stranded [AWG]	28~12		
耐电压	Dielectric Voltage-Withstand	1.6KV		

IEC 技术参数 IEC Technical Data				
过电压类别	Overvoltage Category	Ⅲ	Ⅲ	Ⅱ
污染等级	Contamination Class	3	2	2
额定电压	Rated Voltage [V]	250	320	630
额定电流	Rated Current [A]	12	12	12
额定冲击电压	Impulse withstand voltage [KV]	4	4	4
导线截面积 Conductor cross section	硬质导线 Solid[mm²]	0.2~2.5		
	柔性导线 Flexible[mm²]	0.2~2.5		

材料 Material		
绝缘材料	Insulation Material	PA66
阻燃等级	Flame retardant rating	UL94V-0
导体材料	Conductor Material	Copper alloy
导体表面镀层	Plating of conductor surface	Sn plated

一般参数 Other Data		
间距/极数	Pitch/Poles [mm]/[P]	5.08/2~24
剥线长度	Stripping Length [mm]	7~8
螺丝/扭矩	Screw/Torque(Max)[N.m]	M3/0.5
工作温度	Operating temperature[℃]	-40~+105
焊锡温度	Soldering temperature	/
引针尺寸	Pin dimensions [mm]	/
PCB板孔径	PCB Hole Diameter [mm]	/

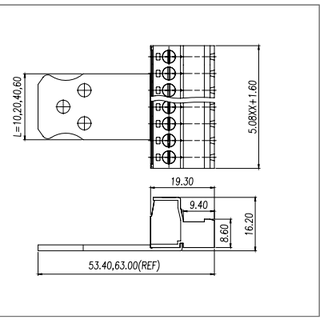



Pitch:5.08mm

WJ2EDGKRZM-5.08

UL/CUL 技术参数 UL/CUL Technical Data				
等级	Use Group	B	C	D
额定电压	Rated Voltage [V]	300	-	300
额定电流	Rated Current [A]	15	-	10
接线范围 Wire Range	单芯线 Solid [AWG]	28~12		
	多芯线 Stranded [AWG]	28~12		
耐电压	Dielectric Voltage-Withstand	1.6KV		

IEC 技术参数 IEC Technical Data				
过电压类别	Overvoltage Category	Ⅲ	Ⅲ	Ⅱ
污染等级	Contamination Class	3	2	2
额定电压	Rated Voltage [V]	250	320	630
额定电流	Rated Current [A]	12	12	12
额定冲击电压	Impulse withstand voltage [KV]	4	4	4
导线截面积 Conductor cross section	硬质导线 Solid[mm²]	0.2~2.5		
	柔性导线 Flexible[mm²]	0.2~2.5		

材料 Material		
绝缘材料	Insulation Material	PA66
阻燃等级	Flame retardant rating	UL94V-0
导体材料	Conductor Material	Copper alloy
导体表面镀层	Plating of conductor surface	Sn plated

一般参数 Other Data		
间距/极数	Pitch/Poles [mm]/[P]	5.08/2~24
剥线长度	Stripping Length [mm]	7-8
螺丝/扭矩	Screw/Torque(Max)[N.m]	M3/0.5
工作温度	Operating temperature[℃]	-40~+105
焊锡温度	Soldering temperature	/
引针尺寸	Pin dimensions [mm]	/
PCB板孔径	PCB Hole Diameter [mm]	/

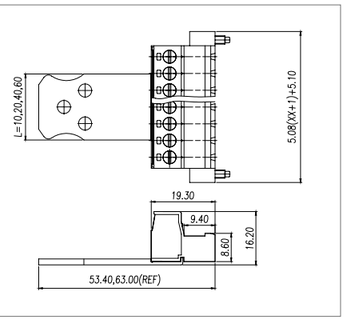

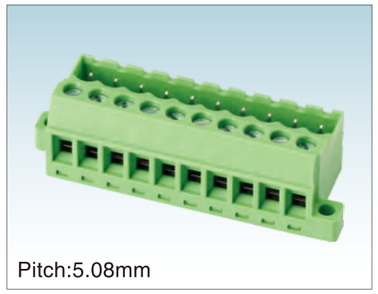

Pitch:5.08mm

WJ2EDGGB-5.08

UL/CUL 技术参数 UL/CUL Technical Data				
等级	Use Group	B	C	D
额定电压	Rated Voltage [V]	300	-	300
额定电流	Rated Current [A]	15	-	10
接线范围 Wire Range	单芯线 Solid [AWG]	28~12		
	多芯线 Stranded [AWG]	28~12		
耐电压	Dielectric Voltage-Withstand	1.6KV		

IEC 技术参数 IEC Technical Data				
过电压类别	Overvoltage Category	Ⅲ	Ⅲ	Ⅱ
污染等级	Contamination Class	3	2	2
额定电压	Rated Voltage [V]	320	320	630
额定电流	Rated Current [A]	12	12	12
额定冲击电压	Impulse withstand voltage [KV]	4	4	4
导线截面积 Conductor cross section	硬质导线 Solid[mm²]	0.2~2.5		
	柔性导线 Flexible[mm²]	0.2~2.5		

材料 Material		
绝缘材料	Insulation Material	PA66
阻燃等级	Flame retardant rating	UL94V-0
导体材料	Conductor Material	Copper alloy
导体表面镀层	Plating of conductor surface	Sn plated

一般参数 Other Data		
间距/极数	Pitch/Poles [mm]/[P]	5.08/2~24
剥线长度	Stripping Length [mm]	7-8
螺丝/扭矩	Screw/Torque(Max)[N.m]	M3/0.5
工作温度	Operating temperature[℃]	-40~+105
焊锡温度	Soldering temperature	/
引针尺寸	Pin dimensions [mm]	/
PCB板孔径	PCB Hole Diameter [mm]	/

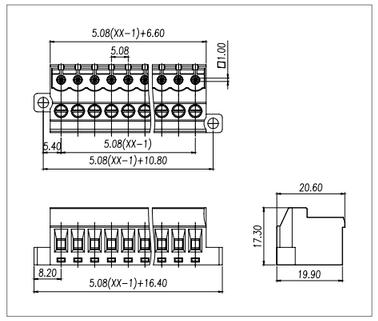

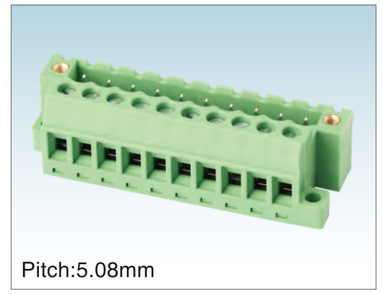

Pitch:5.08mm

WJ2EDGGBM-5.08

UL/CUL 技术参数 UL/CUL Technical Data				
等级	Use Group	B	C	D
额定电压	Rated Voltage [V]	300	-	300
额定电流	Rated Current [A]	15	-	10
接线范围 Wire Range	单芯线 Solid [AWG]	28~12		
	多芯线 Stranded [AWG]	28~12		
耐电压	Dielectric Voltage-Withstand	1.6KV		

IEC 技术参数 IEC Technical Data				
过电压类别	Overvoltage Category	Ⅲ	Ⅲ	Ⅱ
污染等级	Contamination Class	3	2	2
额定电压	Rated Voltage [V]	320	320	630
额定电流	Rated Current [A]	12	12	12
额定冲击电压	Impulse withstand voltage [KV]	4	4	4
导线截面积 Conductor cross section	硬质导线 Solid[mm²]	0.2~2.5		
	柔性导线 Flexible[mm²]	0.2~2.5		

材料 Material		
绝缘材料	Insulation Material	PA66
阻燃等级	Flame retardant rating	UL94V-0
导体材料	Conductor Material	Copper alloy
导体表面镀层	Plating of conductor surface	Sn plated

一般参数 Other Data		
间距/极数	Pitch/Poles [mm]/[P]	5.08/2~24
剥线长度	Stripping Length [mm]	7-8
螺丝/扭矩	Screw/Torque(Max)[N.m]	M3/0.5
工作温度	Operating temperature[℃]	-40~+105
焊锡温度	Soldering temperature	/
引针尺寸	Pin dimensions [mm]	/
PCB板孔径	PCB Hole Diameter [mm]	/

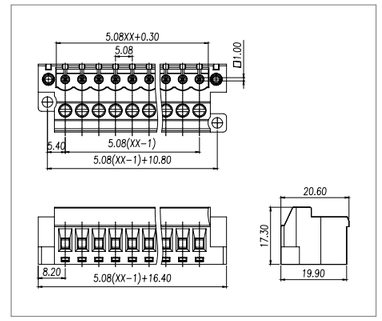

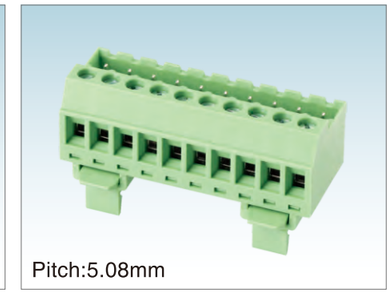

Pitch:5.08mm

WJ2EDGVK-5.08

UL/CUL 技术参数 UL/CUL Technical Data				
等级	Use Group	B	C	D
额定电压	Rated Voltage [V]	300	-	300
额定电流	Rated Current [A]	15	-	10
接线范围 Wire Range	单芯线 Solid [AWG]	28~12		
	多芯线 Stranded [AWG]	28~12		
耐电压	Dielectric Voltage-Withstand	1.6KV		

IEC 技术参数 IEC Technical Data				
过电压类别	Overvoltage Category	Ⅲ	Ⅲ	Ⅱ
污染等级	Contamination Class	3	2	2
额定电压	Rated Voltage [V]	320	320	630
额定电流	Rated Current [A]	12	12	12
额定冲击电压	Impulse withstand voltage [KV]	4	4	4
导线截面积 Conductor cross section	硬质导线 Solid[mm²]	0.2~2.5		
	柔性导线 Flexible[mm²]	0.2~2.5		

材料 Material		
绝缘材料	Insulation Material	PA66
阻燃等级	Flame retardant rating	UL94V-0
导体材料	Conductor Material	Copper alloy
导体表面镀层	Plating of conductor surface	Sn plated

一般参数 Other Data		
间距/极数	Pitch/Poles [mm]/[P]	5.08/2~24
剥线长度	Stripping Length [mm]	7-8
螺丝/扭矩	Screw/Torque(Max)[N.m]	M3/0.5
工作温度	Operating temperature[℃]	-40~+105
焊锡温度	Soldering temperature	/
引针尺寸	Pin dimensions [mm]	/
PCB板孔径	PCB Hole Diameter [mm]	/

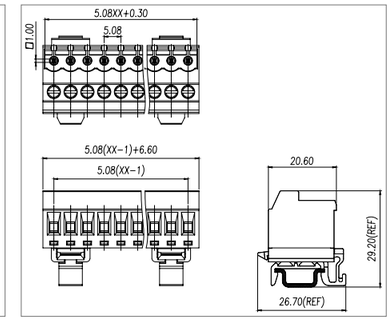

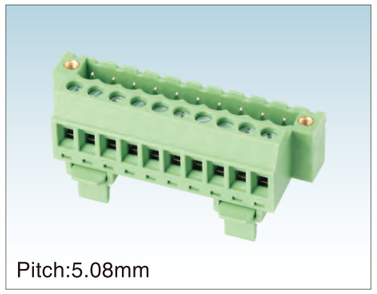

Pitch:5.08mm

WJ2EDGVKM-5.08

UL/CUL 技术参数 UL/CUL Technical Data				
等级	Use Group	B	C	D
额定电压	Rated Voltage [V]	300	-	300
额定电流	Rated Current [A]	15	-	10
接线范围 Wire Range	单芯线 Solid [AWG]	28~12		
	多芯线 Stranded [AWG]	28~12		
耐电压	Dielectric Voltage-Withstand	1.6KV		

IEC 技术参数 IEC Technical Data				
过电压类别	Overvoltage Category	Ⅲ	Ⅲ	Ⅱ
污染等级	Contamination Class	3	2	2
额定电压	Rated Voltage [V]	320	320	630
额定电流	Rated Current [A]	12	12	12
额定冲击电压	Impulse withstand voltage [KV]	4	4	4
导线截面积 Conductor cross section	硬质导线 Solid[mm²]	0.2~2.5		
	柔性导线 Flexible[mm²]	0.2~2.5		

材料 Material		
绝缘材料	Insulation Material	PA66
阻燃等级	Flame retardant rating	UL94V-0
导体材料	Conductor Material	Copper alloy
导体表面镀层	Plating of conductor surface	Sn plated

一般参数 Other Data		
间距/极数	Pitch/Poles [mm]/[P]	5.08/2~24
剥线长度	Stripping Length [mm]	7~8
螺丝/扭矩	Screw/Torque(Max)[N.m]	M3/0.5
工作温度	Operating temperature[℃]	-40~+105
焊锡温度	Soldering temperature	/
引针尺寸	Pin dimensions [mm]	/
PCB板孔径	PCB Hole Diameter [mm]	/

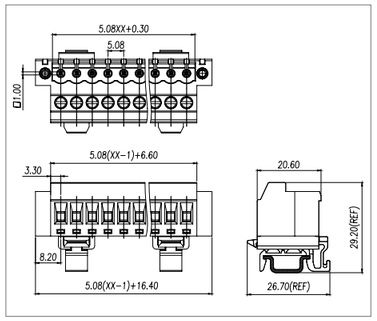

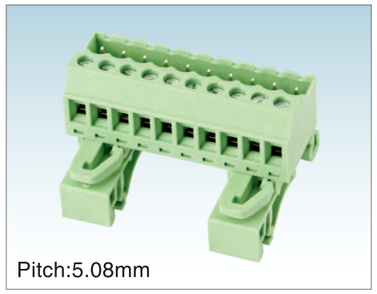

Pitch:5.08mm

WJ2EDGUVK-5.08

UL/CUL 技术参数 UL/CUL Technical Data				
等级	Use Group	B	C	D
额定电压	Rated Voltage [V]	300	-	300
额定电流	Rated Current [A]	15	-	10
接线范围 Wire Range	单芯线 Solid [AWG]	28~12		
	多芯线 Stranded [AWG]	28~12		
耐电压	Dielectric Voltage-Withstand	1.6KV		

IEC 技术参数 IEC Technical Data				
过电压类别	Overvoltage Category	Ⅲ	Ⅲ	Ⅱ
污染等级	Contamination Class	3	2	2
额定电压	Rated Voltage [V]	320	320	630
额定电流	Rated Current [A]	12	12	12
额定冲击电压	Impulse withstand voltage [KV]	4	4	4
导线截面积 Conductor cross section	硬质导线 Solid[mm²]	0.2~2.5		
	柔性导线 Flexible[mm²]	0.2~2.5		

材料 Material		
绝缘材料	Insulation Material	PA66
阻燃等级	Flame retardant rating	UL94V-0
导体材料	Conductor Material	Copper alloy
导体表面镀层	Plating of conductor surface	Sn plated

一般参数 Other Data		
间距/极数	Pitch/Poles [mm]/[P]	5.08/2~24
剥线长度	Stripping Length [mm]	7-8
螺丝/扭矩	Screw/Torque(Max)[N.m]	M3/0.5
工作温度	Operating temperature[℃]	-40~+105
焊锡温度	Soldering temperature	/
引针尺寸	Pin dimensions [mm]	/
PCB板孔径	PCB Hole Diameter [mm]	/

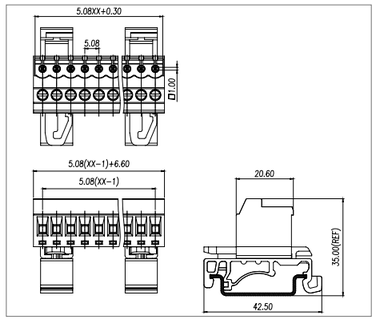

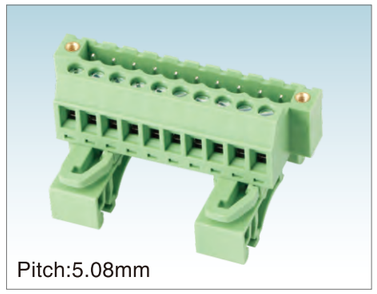

Pitch:5.08mm

WJ2EDGUVKM-5.08

UL/CUL 技术参数 UL/CUL Technical Data				
等级	Use Group	B	C	D
额定电压	Rated Voltage [V]	300	-	300
额定电流	Rated Current [A]	15	-	10
接线范围 Wire Range	单芯线 Solid [AWG]	28~12		
	多芯线 Stranded [AWG]	28~12		
耐电压	Dielectric Voltage-Withstand	1.6KV		

IEC 技术参数 IEC Technical Data				
过电压类别	Overvoltage Category	Ⅲ	Ⅲ	Ⅱ
污染等级	Contamination Class	3	2	2
额定电压	Rated Voltage [V]	320	320	630
额定电流	Rated Current [A]	12	12	12
额定冲击电压	Impulse withstand voltage [KV]	4	4	4
导线截面积 Conductor cross section	硬质导线 Solid[mm²]	0.2~2.5		
	柔性导线 Flexible[mm²]	0.2~2.5		

材料 Material		
绝缘材料	Insulation Material	PA66
阻燃等级	Flame retardant rating	UL94V-0
导体材料	Conductor Material	Copper alloy
导体表面镀层	Plating of conductor surface	Sn plated

一般参数 Other Data		
间距/极数	Pitch/Poles [mm]/[P]	5.08/2~24
剥线长度	Stripping Length [mm]	7~8
螺丝/扭矩	Screw/Torque(Max)[N.m]	M3/0.5
工作温度	Operating temperature[℃]	-40~+105
焊锡温度	Soldering temperature	/
引针尺寸	Pin dimensions [mm]	/
PCB板孔径	PCB Hole Diameter [mm]	/

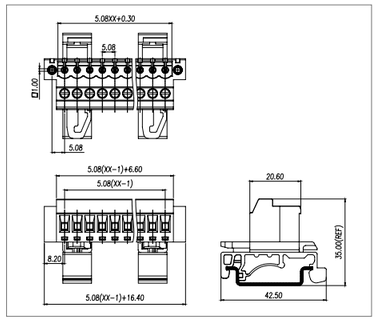

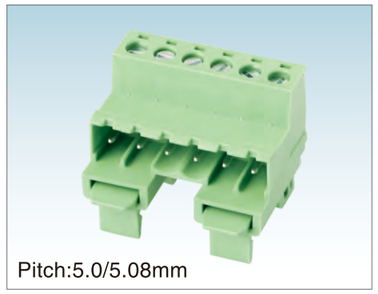

Pitch:5.0/5.08mm

WJ2EDGRK-5.0/5.08

UL/CUL 技术参数 UL/CUL Technical Data				
等级	Use Group	B	C	D
额定电压	Rated Voltage [V]	300	-	300
额定电流	Rated Current [A]	15	-	10
接线范围 Wire Range	单芯线 Solid [AWG]	28~12		
	多芯线 Stranded [AWG]	28~12		
耐电压	Dielectric Voltage-Withstand	1.6KV		

IEC 技术参数 IEC Technical Data				
过电压类别	Overvoltage Category	Ⅲ	Ⅲ	Ⅱ
污染等级	Contamination Class	3	2	2
额定电压	Rated Voltage [V]	250	320	630
额定电流	Rated Current [A]	12	12	12
额定冲击电压	Impulse withstand voltage [KV]	4	4	4
导线截面积 Conductor cross section	硬质导线 Solid[mm²]	0.2~2.5		
	柔性导线 Flexible[mm²]	0.2~2.5		

材料 Material		
绝缘材料	Insulation Material	PA66
阻燃等级	Flame retardant rating	UL94V-0
导体材料	Conductor Material	Copper alloy
导体表面镀层	Plating of conductor surface	Sn plated

一般参数 Other Data		
间距/极数	Pitch/Poles [mm]/[P]	5.0,5.08/2~24
剥线长度	Stripping Length [mm]	7-8
螺丝/扭矩	Screw/Torque(Max)[N.m]	M3/0.5
工作温度	Operating temperature[℃]	-40~+105
焊锡温度	Soldering temperature	/
引针尺寸	Pin dimensions [mm]	/
PCB板孔径	PCB Hole Diameter [mm]	/

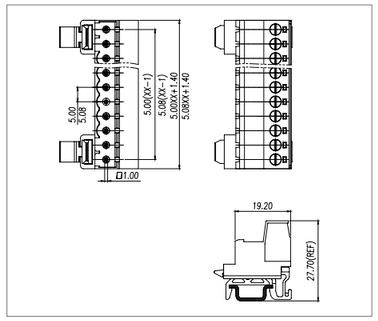

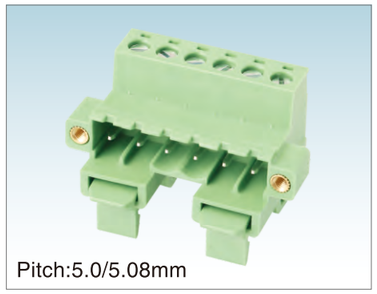

Pitch:5.0/5.08mm

WJ2EDGRKM-5.0/5.08

UL/CUL 技术参数 UL/CUL Technical Data				
等级	Use Group	B	C	D
额定电压	Rated Voltage [V]	300	-	300
额定电流	Rated Current [A]	15	-	10
接线范围 Wire Range	单芯线 Solid [AWG]	28~12		
	多芯线 Stranded [AWG]	28~12		
耐电压	Dielectric Voltage-Withstand	1.6KV		

IEC 技术参数 IEC Technical Data				
过电压类别	Overvoltage Category	Ⅲ	Ⅲ	Ⅱ
污染等级	Contamination Class	3	2	2
额定电压	Rated Voltage [V]	250	320	630
额定电流	Rated Current [A]	12	12	12
额定冲击电压	Impulse withstand voltage [KV]	4	4	4
导线截面积 Conductor cross section	硬质导线 Solid[mm²]	0.2~2.5		
	柔性导线 Flexible[mm²]	0.2~2.5		

材料 Material		
绝缘材料	Insulation Material	PA66
阻燃等级	Flame retardant rating	UL94V-0
导体材料	Conductor Material	Copper alloy
导体表面镀层	Plating of conductor surface	Sn plated

一般参数 Other Data		
间距/极数	Pitch/Poles [mm]/[P]	5.0,5.08/2~24
剥线长度	Stripping Length [mm]	7-8
螺丝/扭矩	Screw/Torque(Max)[N.m]	M3/0.5
工作温度	Operating temperature[℃]	-40~+105
焊锡温度	Soldering temperature	/
引针尺寸	Pin dimensions [mm]	/
PCB板孔径	PCB Hole Diameter [mm]	/

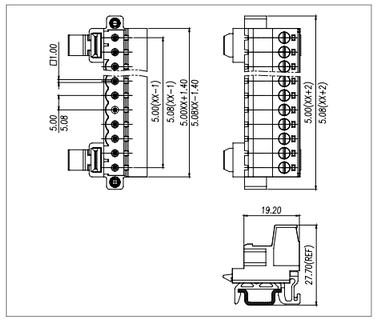

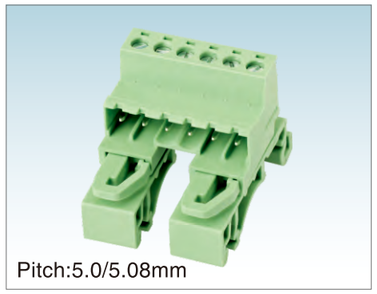

Pitch:5.0/5.08mm

WJ2EDGURK-5.0/5.08

UL/CUL 技术参数 UL/CUL Technical Data				
等级	Use Group	B	C	D
额定电压	Rated Voltage [V]	300	-	300
额定电流	Rated Current [A]	15	-	10
接线范围 Wire Range	单芯线 Solid [AWG]	28~12		
	多芯线 Stranded [AWG]	28~12		
耐电压	Dielectric Voltage-Withstand	1.6KV		

IEC 技术参数 IEC Technical Data				
过电压类别	Overvoltage Category	Ⅲ	Ⅲ	Ⅱ
污染等级	Contamination Class	3	2	2
额定电压	Rated Voltage [V]	250	320	630
额定电流	Rated Current [A]	12	12	12
额定冲击电压	Impulse withstand voltage [KV]	4	4	4
导线截面积 Conductor cross section	硬质导线 Solid[mm²]	0.2~2.5		
	柔性导线 Flexible[mm²]	0.2~2.5		

材料 Material		
绝缘材料	Insulation Material	PA66
阻燃等级	Flame retardant rating	UL94V-0
导体材料	Conductor Material	Copper alloy
导体表面镀层	Plating of conductor surface	Sn plated

一般参数 Other Data		
间距/极数	Pitch/Poles [mm]/[P]	5.0,5.08/2~24
剥线长度	Stripping Length [mm]	7-8
螺丝/扭矩	Screw/Torque(Max)[N.m]	M3/0.5
工作温度	Operating temperature[℃]	-40~+105
焊锡温度	Soldering temperature	/
引针尺寸	Pin dimensions [mm]	/
PCB板孔径	PCB Hole Diameter [mm]	/

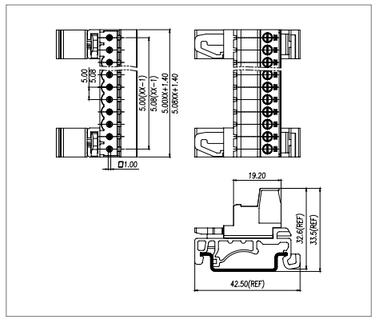

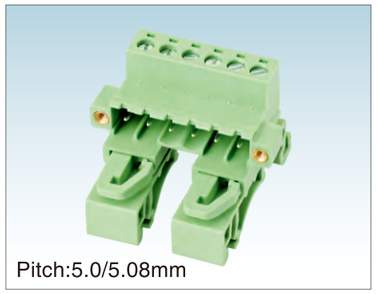

Pitch:5.0/5.08mm

WJ2EDGURKM-5.0/5.08

UL/CUL 技术参数 UL/CUL Technical Data				
等级	Use Group	B	C	D
额定电压	Rated Voltage [V]	300	-	300
额定电流	Rated Current [A]	15	-	10
接线范围 Wire Range	单芯线 Solid [AWG]	28~12		
	多芯线 Stranded [AWG]	28~12		
耐电压	Dielectric Voltage-Withstand	1.6KV		

IEC 技术参数 IEC Technical Data				
过电压类别	Overvoltage Category	Ⅲ	Ⅲ	Ⅱ
污染等级	Contamination Class	3	2	2
额定电压	Rated Voltage [V]	250	320	630
额定电流	Rated Current [A]	12	12	12
额定冲击电压	Impulse withstand voltage [KV]	4	4	4
导线截面积 Conductor cross section	硬质导线 Solid[mm²]	0.2~2.5		
	柔性导线 Flexible[mm²]	0.2~2.5		

材料 Material		
绝缘材料	Insulation Material	PA66
阻燃等级	Flame retardant rating	UL94V-0
导体材料	Conductor Material	Copper alloy
导体表面镀层	Plating of conductor surface	Sn plated

一般参数 Other Data		
间距/极数	Pitch/Poles [mm]/[P]	5.0,5.08/2~24
剥线长度	Stripping Length [mm]	7-8
螺丝/扭矩	Screw/Torque(Max)[N.m]	M3/0.5
工作温度	Operating temperature[℃]	-40~+105
焊锡温度	Soldering temperature	/
引针尺寸	Pin dimensions [mm]	/
PCB板孔径	PCB Hole Diameter [mm]	/

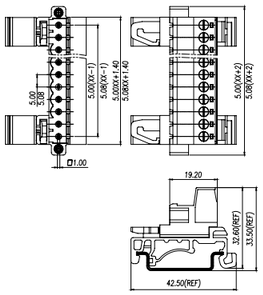



Pitch:5.0mm

WJ2EDGKP-5.0

UL/CUL 技术参数 UL/CUL Technical Data				
等级	Use Group	B	C	D
额定电压	Rated Voltage [V]	300	-	300
额定电流	Rated Current [A]	10	-	10
接线范围 Wire Range	单芯线 Solid [AWG]	28~12		
	多芯线 Stranded [AWG]	28~12		
耐电压	Dielectric Voltage-Withstand	1.6KV		

IEC 技术参数 IEC Technical Data				
过电压类别	Overvoltage Category	Ⅲ	Ⅲ	Ⅱ
污染等级	Contamination Class	3	2	2
额定电压	Rated Voltage [V]	160	250	320
额定电流	Rated Current [A]	17.5	17.5	17.5
额定冲击电压	Impulse withstand voltage [KV]	4	4	4
导线截面积 Conductor cross section	硬质导线 Solid[mm²]	0.2~2.5		
	柔性导线 Flexible[mm²]	0.2~2.5		

材料 Material		
绝缘材料	Insulation Material	PA66
阻燃等级	Flame retardant rating	UL94V-0
导体材料	Conductor Material	Copper alloy
导体表面镀层	Plating of conductor surface	Sn plated

一般参数 Other Data		
间距/极数	Pitch/Poles [mm]/[P]	5.0/2~24
剥线长度	Stripping Length [mm]	7-8
螺丝/扭矩	Screw/Torque(Max)[N.m]	M3/0.5
工作温度	Operating temperature[℃]	-40~+105
焊锡温度	Soldering temperature	/
引针尺寸	Pin dimensions [mm]	/
PCB板孔径	PCB Hole Diameter [mm]	/

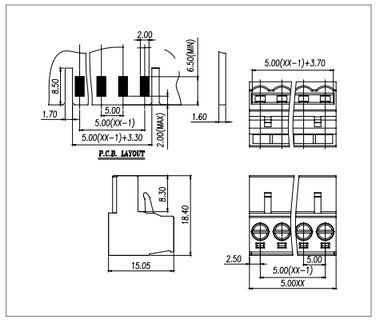

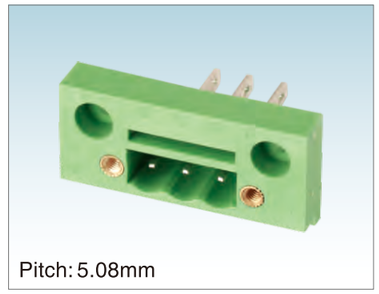

Pitch: 5.08mm

WJ2CDGM-5.08

UL/CUL 技术参数 UL/CUL Technical Data				
等级	Use Group	B	C	D
额定电压	Rated Voltage [V]	300	-	300
额定电流	Rated Current [A]	15	-	10
接线范围 Wire Range	单芯线 Solid [AWG]	/		
	多芯线 Stranded [AWG]	/		
耐电压	Dielectric Voltage-Withstand	1.6KV		

IEC 技术参数 IEC Technical Data				
过电压类别	Overvoltage Category	Ⅲ	Ⅲ	Ⅱ
污染等级	Contamination Class	3	2	2
额定电压	Rated Voltage [V]	320	320	630
额定电流	Rated Current [A]	12	12	12
额定冲击电压	Impulse withstand voltage [KV]	4	4	4
导线截面积 Conductor cross section	硬质导线 Solid[mm²]	/		
	柔性导线 Flexible[mm²]	/		

材料 Material		
绝缘材料	Insulation Material	PA66
阻燃等级	Flame retardant rating	UL94V-0
导体材料	Conductor Material	Copper alloy
导体表面镀层	Plating of conductor surface	Sn plated

一般参数 Other Data		
间距/极数	Pitch/Poles [mm]/[P]	5.08/2~24
剥线长度	Stripping Length [mm]	/
螺丝/扭矩	Screw/Torque(Max)[N.m]	/
工作温度	Operating temperature[℃]	-40~+105
焊锡温度	Soldering temperature	/
引针尺寸	Pin dimensions [mm]	/
PCB板孔径	PCB Hole Diameter [mm]	/

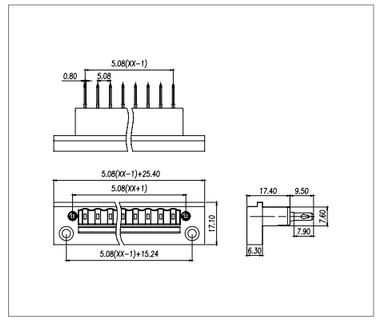

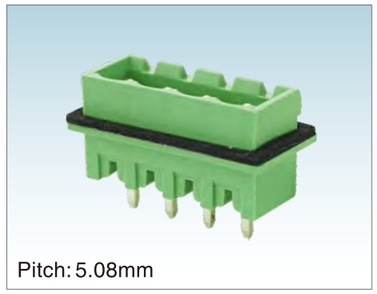

Pitch: 5.08mm

WJ2CDGVC-5.08

UL/CUL 技术参数 UL/CUL Technical Data				
等级	Use Group	B	C	D
额定电压	Rated Voltage [V]	300	-	300
额定电流	Rated Current [A]	15	-	10
接线范围 Wire Range	单芯线 Solid [AWG]	/		
	多芯线 Stranded [AWG]	/		
耐电压	Dielectric Voltage-Withstand	1.6KV		

IEC 技术参数 IEC Technical Data				
过电压类别	Overvoltage Category	Ⅲ	Ⅲ	Ⅱ
污染等级	Contamination Class	3	2	2
额定电压	Rated Voltage [V]	250	320	400
额定电流	Rated Current [A]	10	10	10
额定冲击电压	Impulse withstand voltage [KV]	4	4	4
导线截面积 Conductor cross section	硬质导线 Solid[mm²]	/		
	柔性导线 Flexible[mm²]	/		

材料 Material		
绝缘材料	Insulation Material	PBT
阻燃等级	Flame retardant rating	UL94V-0
导体材料	Conductor Material	Copper alloy
导体表面镀层	Plating of conductor surface	Sn plated

一般参数 Other Data		
间距/极数	Pitch/Poles [mm]/[P]	5.08/2~24
剥线长度	Stripping Length [mm]	/
螺丝/扭矩	Screw/Torque(Max)[N.m]	/
工作温度	Operating temperature[℃]	-40~+105
焊锡温度	Soldering temperature	260℃ /5S
引针尺寸	Pin dimensions [mm]	1.0*1.0
PCB板孔径	PCB Hole Diameter [mm]	∅1.7

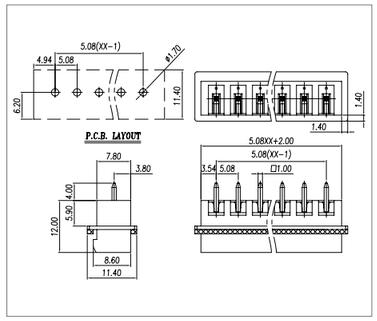

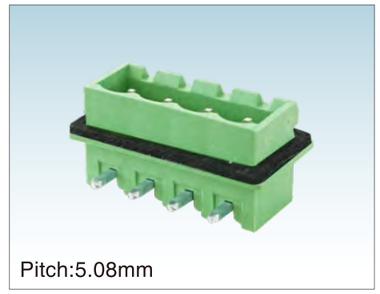

Pitch:5.08mm

WJ2CDGRC-5.08

UL/CUL 技术参数 UL/CUL Technical Data				
等级	Use Group	B	C	D
额定电压	Rated Voltage [V]	300	-	300
额定电流	Rated Current [A]	15	-	10
接线范围 Wire Range	单芯线 Solid [AWG]	/		
	多芯线 Stranded [AWG]	/		
耐电压	Dielectric Voltage-Withstand	1.6KV		

IEC 技术参数 IEC Technical Data				
过电压类别	Overvoltage Category	Ⅲ	Ⅲ	Ⅱ
污染等级	Contamination Class	3	2	2
额定电压	Rated Voltage [V]	250	320	400
额定电流	Rated Current [A]	10	10	10
额定冲击电压	Impulse withstand voltage [KV]	4	4	4
导线截面积 Conductor cross section	硬质导线 Solid[mm²]	/		
	柔性导线 Flexible[mm²]	/		

材料 Material		
绝缘材料	Insulation Material	PBT
阻燃等级	Flame retardant rating	UL94V-0
导体材料	Conductor Material	Copper alloy
导体表面镀层	Plating of conductor surface	Sn plated

一般参数 Other Data		
间距/极数	Pitch/Poles [mm]/[P]	5.08/2~24
剥线长度	Stripping Length [mm]	/
螺丝/扭矩	Screw/Torque(Max)[N.m]	/
工作温度	Operating temperature[℃]	-40~+105
焊锡温度	Soldering temperature	260℃ /5S
引针尺寸	Pin dimensions [mm]	/
PCB板孔径	PCB Hole Diameter [mm]	/

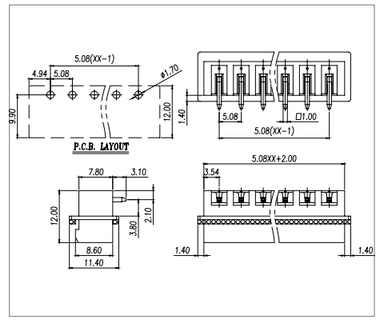

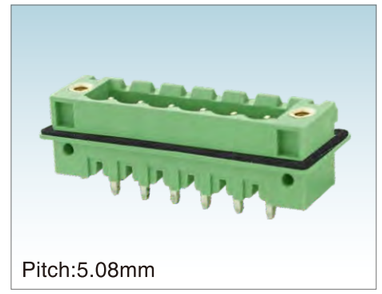

Pitch:5.08mm

WJ2CDGVM-5.08

UL/CUL 技术参数 UL/CUL Technical Data				
等级	Use Group	B	C	D
额定电压	Rated Voltage [V]	300	-	300
额定电流	Rated Current [A]	15	-	10
接线范围 Wire Range	单芯线 Solid [AWG]	/		
	多芯线 Stranded [AWG]	/		
耐电压	Dielectric Voltage-Withstand	1.6KV		

IEC 技术参数 IEC Technical Data				
过电压类别	Overvoltage Category	Ⅲ	Ⅲ	Ⅱ
污染等级	Contamination Class	3	2	2
额定电压	Rated Voltage [V]	250	320	400
额定电流	Rated Current [A]	10	10	10
额定冲击电压	Impulse withstand voltage [KV]	4	4	4
导线截面积 Conductor cross section	硬质导线 Solid[mm²]	/		
	柔性导线 Flexible[mm²]	/		

材料 Material		
绝缘材料	Insulation Material	PBT
阻燃等级	Flame retardant rating	UL94V-0
导体材料	Conductor Material	Copper alloy
导体表面镀层	Plating of conductor surface	Sn plated

一般参数 Other Data		
间距/极数	Pitch/Poles [mm]/[P]	5.08/2~24
剥线长度	Stripping Length [mm]	/
螺丝/扭矩	Screw/Torque(Max)[N.m]	/
工作温度	Operating temperature[℃]	-40~+105
焊锡温度	Soldering temperature	260℃ /5S
引针尺寸	Pin dimensions [mm]	/
PCB板孔径	PCB Hole Diameter [mm]	/

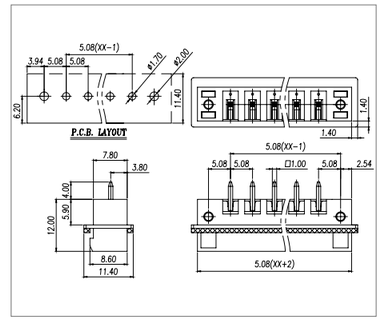

ISO14001 ISO45001 ISO9001 ISO80079-34 ISO/TS 22163

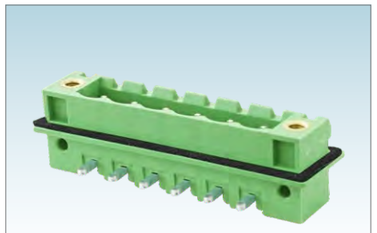

Pitch:5.08mm

WJ2CDGRM-5.08

UL/CUL 技术参数 UL/CUL Technical Data				
等级	Use Group	B	C	D
额定电压	Rated Voltage [V]	300	-	300
额定电流	Rated Current [A]	15	-	10
接线范围 Wire Range	单芯线 Solid [AWG]	/		
	多芯线 Stranded [AWG]	/		
耐电压	Dielectric Voltage-Withstand	1.6KV		
IEC 技术参数 IEC Technical Data				
过电压类别	Overvoltage Category	Ⅲ	Ⅲ	Ⅱ
污染等级	Contamination Class	3	2	2
额定电压	Rated Voltage [V]	250	320	400
额定电流	Rated Current [A]	10	10	10
额定冲击电压	Impulse withstand voltage [KV]	4	4	4
导线截面积 Conductor cross section	硬质导线 Solid[mm²]	/		
	柔性导线 Flexible[mm²]	/		
材料 Material				
绝缘材料	Insulation Material	PBT		
阻燃等级	Flame retardant rating	UL94V-0		
导体材料	Conductor Material	Copper alloy		
导体表面镀层	Plating of conductor surface	Sn plated		
一般参数 Other Data				
间距/极数	Pitch/Poles [mm]/[P]	5.08/2~24		
剥线长度	Stripping Length [mm]	/		
螺丝/扭矩	Screw/Torque(Max)[N.m]	/		
工作温度	Operating temperature[℃]	-40~+105		
焊锡温度	Soldering temperature	260℃ /5S		
引针尺寸	Pin dimensions [mm]	/		
PCB板孔径	PCB Hole Diameter [mm]	/		

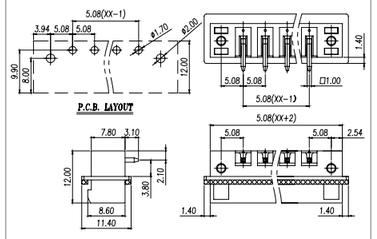



Pitch:3.96mm

HT396K-3.96

UL/CUL 技术参数 UL/CUL Technical Data				
等级	Use Group	B	C	D
额定电压	Rated Voltage [V]	300	-	-
额定电流	Rated Current [A]	8	-	-
接线范围 Wire Range	单芯线 Solid [AWG]	26~16		
	多芯线 Stranded [AWG]	26~16		
耐电压	Dielectric Voltage-Withstand	1.6KV		
IEC 技术参数 IEC Technical Data				
过电压类别	Overvoltage Category	Ⅲ	Ⅲ	Ⅱ
污染等级	Contamination Class	3	2	2
额定电压	Rated Voltage [V]	160	160	320
额定电流	Rated Current [A]	10	10	10
额定冲击电压	Impulse withstand voltage [KV]	4	4	4
导线截面积 Conductor cross section	硬质导线 Solid[mm²]	0.2~1.0		
	柔性导线 Flexible[mm²]	0.2~1.0		
材料 Material				
绝缘材料	Insulation Material	PA66		
阻燃等级	Flame retardant rating	UL94V-0		
导体材料	Conductor Material	Copper alloy		
导体表面镀层	Plating of conductor surface	Ni plated		
一般参数 Other Data				
间距/极数	Pitch/Poles [mm]/[P]	3.96/2~24		
剥线长度	Stripping Length [mm]	5~6		
螺丝/扭矩	Screw/Torque(Max)[N.m]	M2/0.2		
工作温度	Operating temperature[℃]	-40~+105		
焊锡温度	Soldering temperature	/		
引针尺寸	Pin dimensions [mm]	/		
PCB板孔径	PCB Hole Diameter [mm]	/		

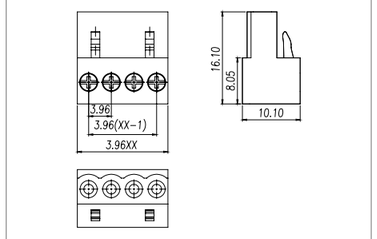



Pitch:3.96mm

HT396V-3.96

UL/CUL 技术参数 UL/CUL Technical Data				
等级	Use Group	B	C	D
额定电压	Rated Voltage [V]	300	-	-
额定电流	Rated Current [A]	8	-	-
接线范围 Wire Range	单芯线 Solid [AWG]	/		
	多芯线 Stranded [AWG]	/		
耐电压	Dielectric Voltage-Withstand	1.6KV		
IEC 技术参数 IEC Technical Data				
过电压类别	Overvoltage Category	Ⅲ	Ⅲ	Ⅱ
污染等级	Contamination Class	3	2	2
额定电压	Rated Voltage [V]	160	160	320
额定电流	Rated Current [A]	10	10	10
额定冲击电压	Impulse withstand voltage [KV]	4	4	4
导线截面积 Conductor cross section	硬质导线 Solid[mm²]	/		
	柔性导线 Flexible[mm²]	/		
材料 Material				
绝缘材料	Insulation Material	PA66		
阻燃等级	Flame retardant rating	UL94V-0		
导体材料	Conductor Material	Copper alloy		
导体表面镀层	Plating of conductor surface	Sn plated		
一般参数 Other Data				
间距/极数	Pitch/Poles [mm]/[P]	3.96/2~24		
剥线长度	Stripping Length [mm]	/		
螺丝/扭矩	Screw/Torque(Max)[N.m]	/		
工作温度	Operating temperature[℃]	-40~+105		
焊锡温度	Soldering temperature	260℃ /5S		
引针尺寸	Pin dimensions [mm]	1.0*1.0		
PCB板孔径	PCB Hole Diameter [mm]	∅1.7		

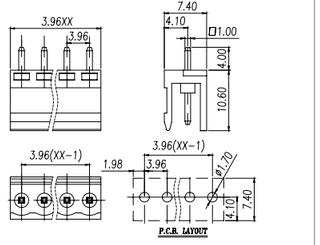



Pitch:3.96mm

HT396R-3.96

UL/CUL 技术参数 UL/CUL Technical Data				
等级	Use Group	B	C	D
额定电压	Rated Voltage [V]	300	-	-
额定电流	Rated Current [A]	8	-	-
接线范围 Wire Range	单芯线 Solid [AWG]	/		
	多芯线 Stranded [AWG]	/		
耐电压	Dielectric Voltage-Withstand	1.6KV		
IEC 技术参数 IEC Technical Data				
过电压类别	Overvoltage Category	Ⅲ	Ⅲ	Ⅱ
污染等级	Contamination Class	3	2	2
额定电压	Rated Voltage [V]	160	160	320
额定电流	Rated Current [A]	10	10	10
额定冲击电压	Impulse withstand voltage [KV]	4	4	4
导线截面积 Conductor cross section	硬质导线 Solid[mm²]	/		
	柔性导线 Flexible[mm²]	/		
材料 Material				
绝缘材料	Insulation Material	PA66		
阻燃等级	Flame retardant rating	UL94V-0		
导体材料	Conductor Material	Copper alloy		
导体表面镀层	Plating of conductor surface	Sn plated		
一般参数 Other Data				
间距/极数	Pitch/Poles [mm]/[P]	3.96/2~24		
剥线长度	Stripping Length [mm]	/		
螺丝/扭矩	Screw/Torque(Max)[N.m]	/		
工作温度	Operating temperature[℃]	-40~+105		
焊锡温度	Soldering temperature	260℃ /5S		
引针尺寸	Pin dimensions [mm]	1.0*1.0		
PCB板孔径	PCB Hole Diameter [mm]	∅1.7		

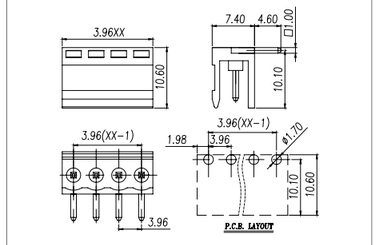



Pitch:5.08mm

HT508K-5.08

UL/CUL 技术参数 UL/CUL Technical Data				
等级	Use Group	B	C	D
额定电压	Rated Voltage [V]	300	-	-
额定电流	Rated Current [A]	10	-	-
接线范围 Wire Range	单芯线 Solid [AWG]	22~14		
	多芯线 Stranded [AWG]	22~14		
耐电压	Dielectric Voltage-Withstand	1.6KV		
IEC 技术参数 IEC Technical Data				
过电压类别	Overvoltage Category	Ⅲ	Ⅲ	Ⅱ
污染等级	Contamination Class	3	2	2
额定电压	Rated Voltage [V]	250	320	400
额定电流	Rated Current [A]	12	12	12
额定冲击电压	Impulse withstand voltage [KV]	4	4	4
导线截面积 Conductor cross section	硬质导线 Solid[mm²]	0.2~1.5		
	柔性导线 Flexible[mm²]	0.2~1.5		
材料 Material				
绝缘材料	Insulation Material	PA66		
阻燃等级	Flame retardant rating	UL94V-0		
导体材料	Conductor Material	Copper alloy		
导体表面镀层	Plating of conductor surface	Ni plated		
一般参数 Other Data				
间距/极数	Pitch/Poles [mm]/[P]	5.08/2~24		
剥线长度	Stripping Length [mm]	5~6		
螺丝/扭矩	Screw/Torque(Max)[N.m]	M2.5/0.4		
工作温度	Operating temperature[℃]	-40~+105		
焊锡温度	Soldering temperature	/		
引针尺寸	Pin dimensions [mm]	/		
PCB板孔径	PCB Hole Diameter [mm]	/		

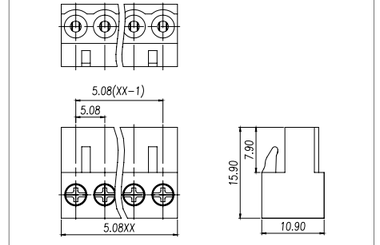

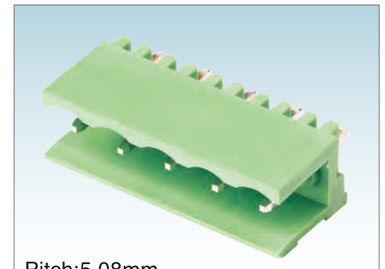

Pitch:5.08mm

HT508V-5.08

UL/CUL 技术参数 UL/CUL Technical Data				
等级	Use Group	B	C	D
额定电压	Rated Voltage [V]	300	-	-
额定电流	Rated Current [A]	10	-	-
接线范围 Wire Range	单芯线 Solid [AWG]	/		
	多芯线 Stranded [AWG]	/		
耐电压	Dielectric Voltage-Withstand	1.6KV		
IEC 技术参数 IEC Technical Data				
过电压类别	Overvoltage Category	Ⅲ	Ⅲ	Ⅱ
污染等级	Contamination Class	3	2	2
额定电压	Rated Voltage [V]	250	320	400
额定电流	Rated Current [A]	12	12	12
额定冲击电压	Impulse withstand voltage [KV]	4	4	4
导线截面积 Conductor cross section	硬质导线 Solid[mm²]	/		
	柔性导线 Flexible[mm²]	/		
材料 Material				
绝缘材料	Insulation Material	PA66		
阻燃等级	Flame retardant rating	UL94V-0		
导体材料	Conductor Material	Copper alloy		
导体表面镀层	Plating of conductor surface	Sn plated		
一般参数 Other Data				
间距/极数	Pitch/Poles [mm]/[P]	5.08/2~24		
剥线长度	Stripping Length [mm]	/		
螺丝/扭矩	Screw/Torque(Max)[N.m]	/		
工作温度	Operating temperature[℃]	-40~+105		
焊锡温度	Soldering temperature	260℃ /5S		
引针尺寸	Pin dimensions [mm]	1.0*1.0		
PCB板孔径	PCB Hole Diameter [mm]	∅1.7		

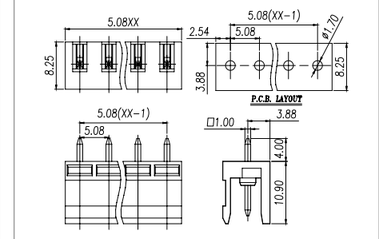

ISO14001 ISO45001 ISO9001 ISO80079-34 ISO/TS 22163

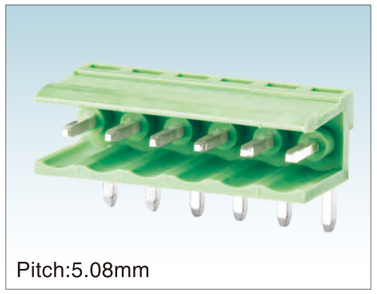

Pitch:5.08mm

HT508R-5.08

UL/CUL 技术参数 UL/CUL Technical Data				
等级	Use Group	B	C	D
额定电压	Rated Voltage [V]	300	-	-
额定电流	Rated Current [A]	10	-	-
接线范围 Wire Range	单芯线 Solid [AWG]	/		
	多芯线 Stranded [AWG]	/		
耐电压	Dielectric Voltage-Withstand	1.6KV		

IEC 技术参数 IEC Technical Data				
过电压类别	Overvoltage Category	Ⅲ	Ⅲ	Ⅱ
污染等级	Contamination Class	3	2	2
额定电压	Rated Voltage [V]	250	320	400
额定电流	Rated Current [A]	12	12	12
额定冲击电压	Impulse withstand voltage [KV]	4	4	4
导线截面积 Conductor cross section	硬质导线 Solid[mm²]	/		
	柔性导线 Flexible[mm²]	/		

材料 Material		
绝缘材料	Insulation Material	PA66
阻燃等级	Flame retardant rating	UL94V-0
导体材料	Conductor Material	Copper alloy
导体表面镀层	Plating of conductor surface	Sn plated

一般参数 Other Data		
间距/极数	Pitch/Poles [mm]/[P]	5.08/2~24
剥线长度	Stripping Length [mm]	/
螺丝/扭矩	Screw/Torque(Max)[N.m]	/
工作温度	Operating temperature[℃]	-40~+105
焊锡温度	Soldering temperature	260℃ /5S
引针尺寸	Pin dimensions [mm]	1.0*1.0
PCB板孔径	PCB Hole Diameter [mm]	∅1.7

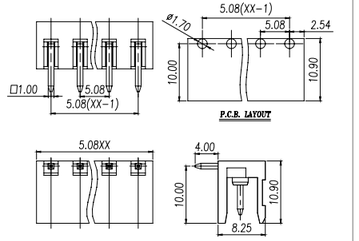

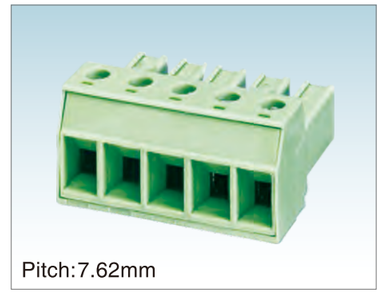

Pitch:7.62mm

WJ3EDGK-7.62

UL/CUL 技术参数 UL/CUL Technical Data				
等级	Use Group	B	C	D
额定电压	Rated Voltage [V]	300	-	300
额定电流	Rated Current [A]	30	-	10
接线范围 Wire Range	单芯线 Solid [AWG]	28~10		
	多芯线 Stranded [AWG]	28~10		
耐电压	Dielectric Voltage-Withstand	1.6KV		

IEC 技术参数 IEC Technical Data				
过电压类别	Overvoltage Category	Ⅲ	Ⅲ	Ⅱ
污染等级	Contamination Class	3	2	2
额定电压	Rated Voltage [V]	400	630	1000
额定电流	Rated Current [A]	20	20	20
额定冲击电压	Impulse withstand voltage [KV]	6	6	6
导线截面积 Conductor cross section	硬质导线 Solid[mm²]	0.5~4		
	柔性导线 Flexible[mm²]	0.5~4		

材料 Material		
绝缘材料	Insulation Material	PA66
阻燃等级	Flame retardant rating	UL94V-0
导体材料	Conductor Material	Copper alloy
导体表面镀层	Plating of conductor surface	Sn plated

一般参数 Other Data		
间距/极数	Pitch/Poles [mm]/[P]	7.62/2~24
剥线长度	Stripping Length [mm]	8~9
螺丝/扭矩	Screw/Torque(Max)[N.m]	M3/0.5
工作温度	Operating temperature[℃]	-40~+105
焊锡温度	Soldering temperature	/
引针尺寸	Pin dimensions [mm]	/
PCB板孔径	PCB Hole Diameter [mm]	/

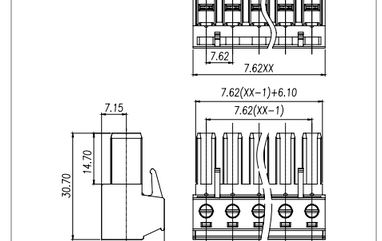

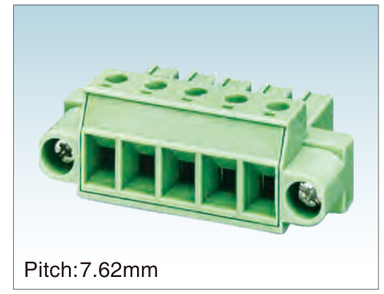

Pitch:7.62mm

WJ3EDGKM-7.62

UL/CUL 技术参数 UL/CUL Technical Data				
等级	Use Group	B	C	D
额定电压	Rated Voltage [V]	300	-	300
额定电流	Rated Current [A]	30	-	10
接线范围 Wire Range	单芯线 Solid [AWG]	28~10		
	多芯线 Stranded [AWG]	28~10		
耐电压	Dielectric Voltage-Withstand	1.6KV		

IEC 技术参数 IEC Technical Data				
过电压类别	Overvoltage Category	Ⅲ	Ⅲ	Ⅱ
污染等级	Contamination Class	3	2	2
额定电压	Rated Voltage [V]	400	630	1000
额定电流	Rated Current [A]	20	20	20
额定冲击电压	Impulse withstand voltage [KV]	6	6	6
导线截面积 Conductor cross section	硬质导线 Solid[mm²]	0.5~4		
	柔性导线 Flexible[mm²]	0.5~4		

材料 Material		
绝缘材料	Insulation Material	PA66
阻燃等级	Flame retardant rating	UL94V-0
导体材料	Conductor Material	Copper alloy
导体表面镀层	Plating of conductor surface	Sn plated

一般参数 Other Data		
间距/极数	Pitch/Poles [mm]/[P]	7.62/2~24
剥线长度	Stripping Length [mm]	8~9
螺丝/扭矩	Screw/Torque(Max)[N.m]	M3/0.5
工作温度	Operating temperature[℃]	-40~+105
焊锡温度	Soldering temperature	/
引针尺寸	Pin dimensions [mm]	/
PCB板孔径	PCB Hole Diameter [mm]	/

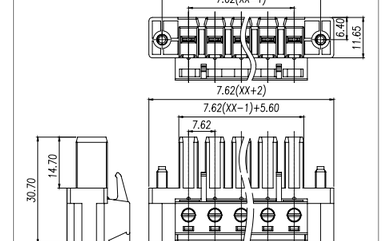

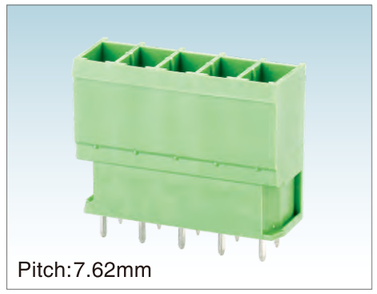

Pitch:7.62mm

WJ3EDGVC-7.62

UL/CUL 技术参数 UL/CUL Technical Data				
等级	Use Group	B	C	D
额定电压	Rated Voltage [V]	300	300	300
额定电流	Rated Current [A]	30	30	10
接线范围 Wire Range	单芯线 Solid [AWG]	/		
	多芯线 Stranded [AWG]	/		
耐电压	Dielectric Voltage-Withstand	1.6KV		

IEC 技术参数 IEC Technical Data				
过电压类别	Overvoltage Category	Ⅲ	Ⅲ	Ⅱ
污染等级	Contamination Class	3	2	2
额定电压	Rated Voltage [V]	400	630	1000
额定电流	Rated Current [A]	20	20	20
额定冲击电压	Impulse withstand voltage [KV]	6	6	6
导线截面积 Conductor cross section	硬质导线 Solid[mm²]	/		
	柔性导线 Flexible[mm²]	/		

材料 Material		
绝缘材料	Insulation Material	PA66
阻燃等级	Flame retardant rating	UL94V-0
导体材料	Conductor Material	Copper alloy
导体表面镀层	Plating of conductor surface	Sn plated

一般参数 Other Data		
间距/极数	Pitch/Poles [mm]/[P]	7.62/2~24
剥线长度	Stripping Length [mm]	/
螺丝/扭矩	Screw/Torque(Max)[N.m]	/
工作温度	Operating temperature[℃]	-40~+105
焊锡温度	Soldering temperature	260℃ /5S
引针尺寸	Pin dimensions [mm]	0.8*1.0
PCB板孔径	PCB Hole Diameter [mm]	∅1.5

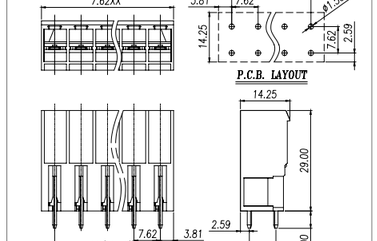

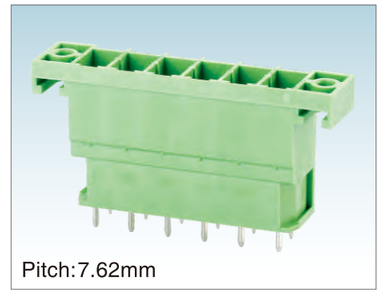

Pitch:7.62mm

WJ3EDGVM-7.62

UL/CUL 技术参数 UL/CUL Technical Data				
等级	Use Group	B	C	D
额定电压	Rated Voltage [V]	300	300	300
额定电流	Rated Current [A]	30	30	10
接线范围 Wire Range	单芯线 Solid [AWG]	/		
	多芯线 Stranded [AWG]	/		
耐电压	Dielectric Voltage-Withstand	1.6KV		

IEC 技术参数 IEC Technical Data				
过电压类别	Overvoltage Category	Ⅲ	Ⅲ	Ⅱ
污染等级	Contamination Class	3	2	2
额定电压	Rated Voltage [V]	400	630	1000
额定电流	Rated Current [A]	20	20	20
额定冲击电压	Impulse withstand voltage [KV]	6	6	6
导线截面积 Conductor cross section	硬质导线 Solid[mm²]	/		
	柔性导线 Flexible[mm²]	/		

材料 Material		
绝缘材料	Insulation Material	PA66
阻燃等级	Flame retardant rating	UL94V-0
导体材料	Conductor Material	Copper alloy
导体表面镀层	Plating of conductor surface	Sn plated

一般参数 Other Data		
间距/极数	Pitch/Poles [mm]/[P]	7.62/2~24
剥线长度	Stripping Length [mm]	/
螺丝/扭矩	Screw/Torque(Max)[N.m]	/
工作温度	Operating temperature[℃]	-40~+105
焊锡温度	Soldering temperature	260℃ /5S
引针尺寸	Pin dimensions [mm]	0.8*1.0
PCB板孔径	PCB Hole Diameter [mm]	∅1.5

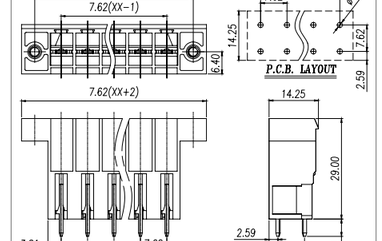

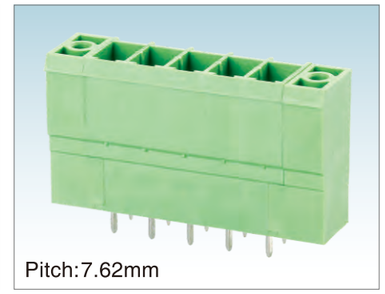

Pitch:7.62mm

WJ3EDGVZM-7.62

UL/CUL 技术参数 UL/CUL Technical Data				
等级	Use Group	B	C	D
额定电压	Rated Voltage [V]	300	300	300
额定电流	Rated Current [A]	30	30	10
接线范围 Wire Range	单芯线 Solid [AWG]	/		
	多芯线 Stranded [AWG]	/		
耐电压	Dielectric Voltage-Withstand	1.6KV		

IEC 技术参数 IEC Technical Data				
过电压类别	Overvoltage Category	Ⅲ	Ⅲ	Ⅱ
污染等级	Contamination Class	3	2	2
额定电压	Rated Voltage [V]	400	630	1000
额定电流	Rated Current [A]	20	20	20
额定冲击电压	Impulse withstand voltage [KV]	6	6	6
导线截面积 Conductor cross section	硬质导线 Solid[mm²]	/		
	柔性导线 Flexible[mm²]	/		

材料 Material		
绝缘材料	Insulation Material	PA66
阻燃等级	Flame retardant rating	UL94V-0
导体材料	Conductor Material	Copper alloy
导体表面镀层	Plating of conductor surface	Sn plated

一般参数 Other Data		
间距/极数	Pitch/Poles [mm]/[P]	7.62/2~24
剥线长度	Stripping Length [mm]	/
螺丝/扭矩	Screw/Torque(Max)[N.m]	/
工作温度	Operating temperature[℃]	-40~+105
焊锡温度	Soldering temperature	260℃ /5S
引针尺寸	Pin dimensions [mm]	0.8*1.0
PCB板孔径	PCB Hole Diameter [mm]	∅1.5

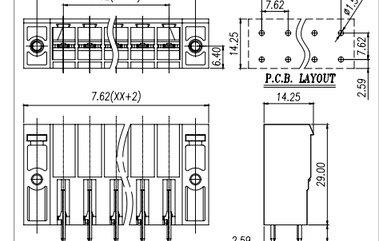

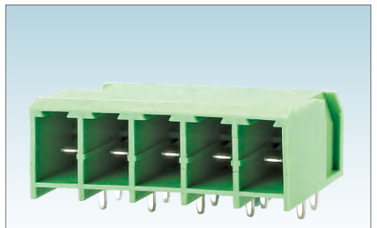

Pitch:7.62mm

WJ3EDGRC-7.62

UL/CUL 技术参数 UL/CUL Technical Data				
等级	Use Group	B	C	D
额定电压	Rated Voltage [V]	300	300	300
额定电流	Rated Current [A]	30	30	10
接线范围 Wire Range	单芯线 Solid [AWG]	/		
	多芯线 Stranded [AWG]	/		
耐电压	Dielectric Voltage-Withstand	1.6KV		
IEC 技术参数 IEC Technical Data				
过电压类别	Overvoltage Category	Ⅲ	Ⅲ	Ⅱ
污染等级	Contamination Class	3	2	2
额定电压	Rated Voltage [V]	400	630	1000
额定电流	Rated Current [A]	20	20	20
额定冲击电压	Impulse withstand voltage [KV]	6	6	6
导线截面积 Conductor cross section	硬质导线 Solid[mm²]	/		
	柔性导线 Flexible[mm²]	/		
材料 Material				
绝缘材料	Insulation Material	PA66		
阻燃等级	Flame retardant rating	UL94V-0		
导体材料	Conductor Material	Copper alloy		
导体表面镀层	Plating of conductor surface	Sn plated		
一般参数 Other Data				
间距/极数	Pitch/Poles [mm]/[P]	7.62/2~24		
剥线长度	Stripping Length [mm]	/		
螺丝/扭矩	Screw/Torque(Max)[N.m]	/		
工作温度	Operating temperature[℃]	-40~+105		
焊锡温度	Soldering temperature	260℃ /5S		
引针尺寸	Pin dimensions [mm]	0.8*1.0		
PCB板孔径	PCB Hole Diameter [mm]	∅1.5		

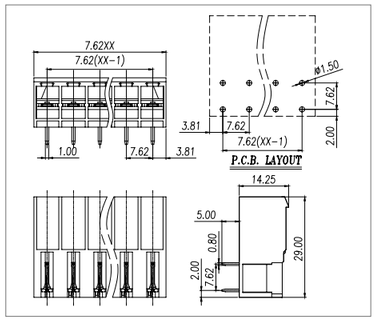

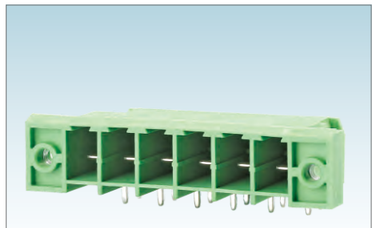

Pitch:7.62mm

WJ3EDGRM-7.62

UL/CUL 技术参数 UL/CUL Technical Data				
等级	Use Group	B	C	D
额定电压	Rated Voltage [V]	300	300	300
额定电流	Rated Current [A]	30	30	10
接线范围 Wire Range	单芯线 Solid [AWG]	/		
	多芯线 Stranded [AWG]	/		
耐电压	Dielectric Voltage-Withstand	1.6KV		
IEC 技术参数 IEC Technical Data				
过电压类别	Overvoltage Category	Ⅲ	Ⅲ	Ⅱ
污染等级	Contamination Class	3	2	2
额定电压	Rated Voltage [V]	400	630	1000
额定电流	Rated Current [A]	20	20	20
额定冲击电压	Impulse withstand voltage [KV]	6	6	6
导线截面积 Conductor cross section	硬质导线 Solid[mm²]	/		
	柔性导线 Flexible[mm²]	/		
材料 Material				
绝缘材料	Insulation Material	PA66		
阻燃等级	Flame retardant rating	UL94V-0		
导体材料	Conductor Material	Copper alloy		
导体表面镀层	Plating of conductor surface	Sn plated		
一般参数 Other Data				
间距/极数	Pitch/Poles [mm]/[P]	7.62/2~24		
剥线长度	Stripping Length [mm]	/		
螺丝/扭矩	Screw/Torque(Max)[N.m]	/		
工作温度	Operating temperature[℃]	-40~+105		
焊锡温度	Soldering temperature	260℃ /5S		
引针尺寸	Pin dimensions [mm]	0.8*1.0		
PCB板孔径	PCB Hole Diameter [mm]	∅1.5		

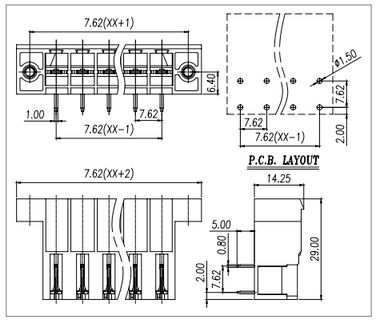

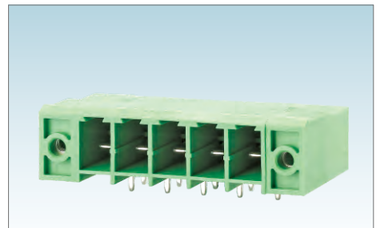

Pitch:7.62mm

WJ3EDGRZM-7.62

UL/CUL 技术参数 UL/CUL Technical Data				
等级	Use Group	B	C	D
额定电压	Rated Voltage [V]	300	300	300
额定电流	Rated Current [A]	30	30	10
接线范围 Wire Range	单芯线 Solid [AWG]	/		
	多芯线 Stranded [AWG]	/		
耐电压	Dielectric Voltage-Withstand	1.6KV		
IEC 技术参数 IEC Technical Data				
过电压类别	Overvoltage Category	Ⅲ	Ⅲ	Ⅱ
污染等级	Contamination Class	3	2	2
额定电压	Rated Voltage [V]	400	630	1000
额定电流	Rated Current [A]	20	20	20
额定冲击电压	Impulse withstand voltage [KV]	6	6	6
导线截面积 Conductor cross section	硬质导线 Solid[mm²]	/		
	柔性导线 Flexible[mm²]	/		
材料 Material				
绝缘材料	Insulation Material	PA66		
阻燃等级	Flame retardant rating	UL94V-0		
导体材料	Conductor Material	Copper alloy		
导体表面镀层	Plating of conductor surface	Sn plated		
一般参数 Other Data				
间距/极数	Pitch/Poles [mm]/[P]	7.62/2~24		
剥线长度	Stripping Length [mm]	/		
螺丝/扭矩	Screw/Torque(Max)[N.m]	/		
工作温度	Operating temperature[℃]	-40~+105		
焊锡温度	Soldering temperature	260℃ /5S		
引针尺寸	Pin dimensions [mm]	0.8*1.0		
PCB板孔径	PCB Hole Diameter [mm]	∅1.5		

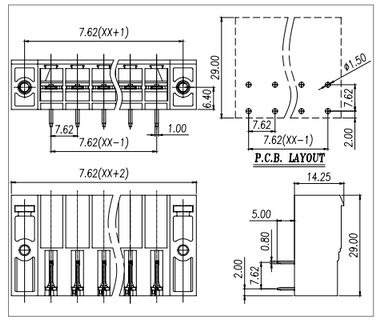

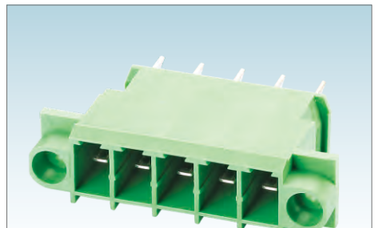

Pitch:7.62mm

WJ3CDGM-7.62

UL/CUL 技术参数 UL/CUL Technical Data				
等级	Use Group	B	C	D
额定电压	Rated Voltage [V]	300	300	300
额定电流	Rated Current [A]	30	30	10
接线范围 Wire Range	单芯线 Solid [AWG]	/		
	多芯线 Stranded [AWG]	/		
耐电压	Dielectric Voltage-Withstand	1.6KV		
IEC 技术参数 IEC Technical Data				
过电压类别	Overvoltage Category	Ⅲ	Ⅲ	Ⅱ
污染等级	Contamination Class	3	2	2
额定电压	Rated Voltage [V]	400	400	800
额定电流	Rated Current [A]	15	15	15
额定冲击电压	Impulse withstand voltage [KV]	6	6	6
导线截面积 Conductor cross section	硬质导线 Solid[mm²]	/		
	柔性导线 Flexible[mm²]	/		
材料 Material				
绝缘材料	Insulation Material	PA66		
阻燃等级	Flame retardant rating	UL94V-0		
导体材料	Conductor Material	Copper alloy		
导体表面镀层	Plating of conductor surface	Sn plated		
一般参数 Other Data				
间距/极数	Pitch/Poles [mm]/[P]	7.62/2~24		
剥线长度	Stripping Length [mm]	/		
螺丝/扭矩	Screw/Torque(Max)[N.m]	/		
工作温度	Operating temperature[℃]	-40~+105		
焊锡温度	Soldering temperature	/		
引针尺寸	Pin dimensions [mm]	0.8*4.8		
PCB板孔径	PCB Hole Diameter [mm]	/		

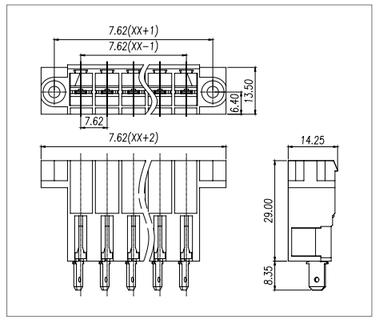



Pitch:7.62mm

WJ3EDGKH-7.62

UL/CUL 技术参数 UL/CUL Technical Data				
等级	Use Group	B	C	D
额定电压	Rated Voltage [V]	300	-	300
额定电流	Rated Current [A]	41	-	10
接线范围 Wire Range	单芯线 Solid [AWG]	24~8		
	多芯线 Stranded [AWG]	24~8		
耐电压	Dielectric Voltage-Withstand	1.6KV		
IEC 技术参数 IEC Technical Data				
过电压类别	Overvoltage Category	Ⅲ	Ⅲ	Ⅱ
污染等级	Contamination Class	3	2	2
额定电压	Rated Voltage [V]	1000	1000	1000
额定电流	Rated Current [A]	41	41	41
额定冲击电压	Impulse withstand voltage [KV]	8	8	6
导线截面积 Conductor cross section	硬质导线 Solid[mm²]	0.2~6		
	柔性导线 Flexible[mm²]	0.2~6		
材料 Material				
绝缘材料	Insulation Material	PA66		
阻燃等级	Flame retardant rating	UL94V-0		
导体材料	Conductor Material	Copper alloy		
导体表面镀层	Plating of conductor surface	Sn plated		
一般参数 Other Data				
间距/极数	Pitch/Poles [mm]/[P]	7.62/2-12		
剥线长度	Stripping Length [mm]	10		
螺丝/扭矩	Screw/Torque(Max)[N.m]	M3/0.5		
工作温度	Operating temperature[℃]	-40~+105		
焊锡温度	Soldering temperature	/		
引针尺寸	Pin dimensions [mm]	/		
PCB板孔径	PCB Hole Diameter [mm]	/		

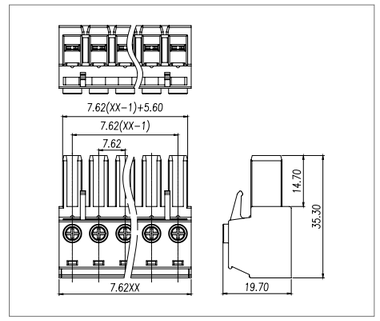



Pitch:7.62mm

WJ3EDGKHM-7.62

UL/CUL 技术参数 UL/CUL Technical Data				
等级	Use Group	B	C	D
额定电压	Rated Voltage [V]	300	-	300
额定电流	Rated Current [A]	41	-	10
接线范围 Wire Range	单芯线 Solid [AWG]	24~8		
	多芯线 Stranded [AWG]	24~8		
耐电压	Dielectric Voltage-Withstand	1.6KV		
IEC 技术参数 IEC Technical Data				
过电压类别	Overvoltage Category	Ⅲ	Ⅲ	Ⅱ
污染等级	Contamination Class	3	2	2
额定电压	Rated Voltage [V]	1000	1000	1000
额定电流	Rated Current [A]	41	41	41
额定冲击电压	Impulse withstand voltage [KV]	8	8	6
导线截面积 Conductor cross section	硬质导线 Solid[mm²]	0.2~6		
	柔性导线 Flexible[mm²]	0.2~6		
材料 Material				
绝缘材料	Insulation Material	PA66		
阻燃等级	Flame retardant rating	UL94V-0		
导体材料	Conductor Material	Copper alloy		
导体表面镀层	Plating of conductor surface	Sn plated		
一般参数 Other Data				
间距/极数	Pitch/Poles [mm]/[P]	7.62/2-12		
剥线长度	Stripping Length [mm]	10		
螺丝/扭矩	Screw/Torque(Max)[N.m]	M3/0.5		
工作温度	Operating temperature[℃]	-40~+105		
焊锡温度	Soldering temperature	/		
引针尺寸	Pin dimensions [mm]	/		
PCB板孔径	PCB Hole Diameter [mm]	/		

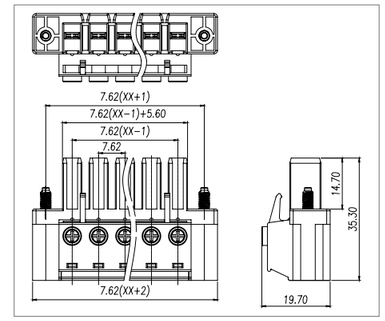

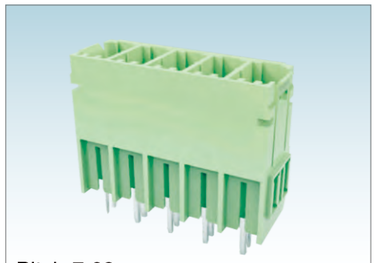

Pitch:7.62mm

WJ3EDGVH-7.62

UL/CUL 技术参数 UL/CUL Technical Data				
等级	Use Group	B	C	D
额定电压	Rated Voltage [V]	300	300	300
额定电流	Rated Current [A]	41	41	10
接线范围 Wire Range	单芯线 Solid [AWG]	/		
	多芯线 Stranded [AWG]	/		
耐电压	Dielectric Voltage-Withstand	1.6KV		
IEC 技术参数 IEC Technical Data				
过电压类别	Overvoltage Category	Ⅲ	Ⅲ	Ⅱ
污染等级	Contamination Class	3	2	2
额定电压	Rated Voltage [V]	630	630	1000
额定电流	Rated Current [A]	41	41	41
额定冲击电压	Impulse withstand voltage [KV]	6	6	6
导线截面积 Conductor cross section	硬质导线 Solid[mm²]	/		
	柔性导线 Flexible[mm²]	/		
材料 Material				
绝缘材料	Insulation Material	PA66		
阻燃等级	Flame retardant rating	UL94V-0		
导体材料	Conductor Material	Copper alloy		
导体表面镀层	Plating of conductor surface	Sn plated		
一般参数 Other Data				
间距/极数	Pitch/Poles [mm]/[P]	7.62/2-12		
剥线长度	Stripping Length [mm]	/		
螺丝/扭矩	Screw/Torque(Max)[N.m]	/		
工作温度	Operating temperature[℃]	-40~+105		
焊锡温度	Soldering temperature	260℃ /5S		
引针尺寸	Pin dimensions [mm]	1.0*0.8		
PCB板孔径	PCB Hole Diameter [mm]	∅1.6		

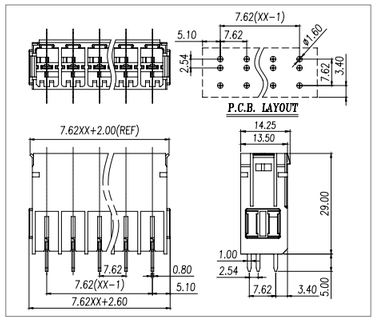



Pitch:7.62mm

WJ3EDGRH-7.62

UL/CUL 技术参数 UL/CUL Technical Data				
等级	Use Group	B	C	D
额定电压	Rated Voltage [V]	300	300	300
额定电流	Rated Current [A]	41	41	10
接线范围 Wire Range	单芯线 Solid [AWG]	/		
	多芯线 Stranded [AWG]	/		
耐电压	Dielectric Voltage-Withstand	1.6KV		
IEC 技术参数 IEC Technical Data				
过电压类别	Overvoltage Category	Ⅲ	Ⅲ	Ⅱ
污染等级	Contamination Class	3	2	2
额定电压	Rated Voltage [V]	630	630	1000
额定电流	Rated Current [A]	41	41	41
额定冲击电压	Impulse withstand voltage [KV]	6	6	6
导线截面积 Conductor cross section	硬质导线 Solid[mm²]	/		
	柔性导线 Flexible[mm²]	/		
材料 Material				
绝缘材料	Insulation Material	PA66		
阻燃等级	Flame retardant rating	UL94V-0		
导体材料	Conductor Material	Copper alloy		
导体表面镀层	Plating of conductor surface	Sn plated		
一般参数 Other Data				
间距/极数	Pitch/Poles [mm]/[P]	7.62/2-12		
剥线长度	Stripping Length [mm]	/		
螺丝/扭矩	Screw/Torque(Max)[N.m]	/		
工作温度	Operating temperature[℃]	-40~+105		
焊锡温度	Soldering temperature	260℃ /5S		
引针尺寸	Pin dimensions [mm]	1.0*0.8		
PCB板孔径	PCB Hole Diameter [mm]	∅1.6		

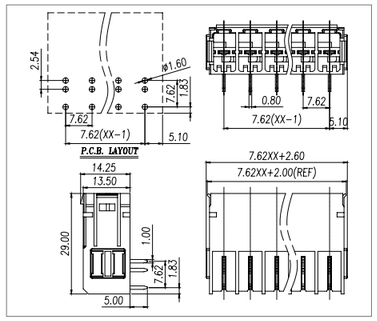



Pitch:7.62mm

WJ3EDGRRH-7.62

UL/CUL 技术参数 UL/CUL Technical Data				
等级	Use Group	B	C	D
额定电压	Rated Voltage [V]	300	300	300
额定电流	Rated Current [A]	41	41	10
接线范围 Wire Range	单芯线 Solid [AWG]	/		
	多芯线 Stranded [AWG]	/		
耐电压	Dielectric Voltage-Withstand	1.6KV		
IEC 技术参数 IEC Technical Data				
过电压类别	Overvoltage Category	Ⅲ	Ⅲ	Ⅱ
污染等级	Contamination Class	3	2	2
额定电压	Rated Voltage [V]	630	630	1000
额定电流	Rated Current [A]	41	41	41
额定冲击电压	Impulse withstand voltage [KV]	6	6	6
导线截面积 Conductor cross section	硬质导线 Solid[mm²]	/		
	柔性导线 Flexible[mm²]	/		
材料 Material				
绝缘材料	Insulation Material	PA66		
阻燃等级	Flame retardant rating	UL94V-0		
导体材料	Conductor Material	Copper alloy		
导体表面镀层	Plating of conductor surface	Sn plated		
一般参数 Other Data				
间距/极数	Pitch/Poles [mm]/[P]	7.62/2-12		
剥线长度	Stripping Length [mm]	/		
螺丝/扭矩	Screw/Torque(Max)[N.m]	/		
工作温度	Operating temperature[℃]	-40~+105		
焊锡温度	Soldering temperature	260℃ /5S		
引针尺寸	Pin dimensions [mm]	1.0*0.8		
PCB板孔径	PCB Hole Diameter [mm]	∅1.6		

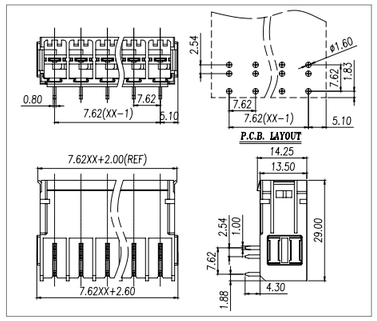



Pitch:7.62mm

WJ3EDGVHM-7.62

UL/CUL 技术参数 UL/CUL Technical Data				
等级	Use Group	B	C	D
额定电压	Rated Voltage [V]	300	300	300
额定电流	Rated Current [A]	41	41	10
接线范围 Wire Range	单芯线 Solid [AWG]	/		
	多芯线 Stranded [AWG]	/		
耐电压	Dielectric Voltage-Withstand	1.6KV		
IEC 技术参数 IEC Technical Data				
过电压类别	Surge voltage category	Ⅲ	Ⅲ	Ⅱ
污染等级	Contamination Class	3	2	2
额定电压	Rated Voltage [V]	630	630	1000
额定电流	Rated Current [A]	41	41	41
额定冲击电压	Impulse withstand voltage [KV]	6	6	6
导线截面积 Conductor cross section	硬质导线 Solid[mm²]	/		
	柔性导线 Flexible[mm²]	/		
材料 Material				
绝缘材料	Insulation Material	PA66		
阻燃等级	Inflammability Class	UL94V-0		
导体材料	Conductor Material	Copper alloy		
导体表面镀层	Conductor Plating	Sn plated		
一般参数 Other Data				
间距/极数	Pitch/Poles [mm]/[P]	7.62/2~12		
剥线长度	Stripping Length [mm]	/		
螺丝/扭矩	Screw/Torque(Max)[N.m]	/		
工作温度	Operating temperature[℃]	-40~+105		
焊锡温度	Soldering temperature	260℃/5S		
引针尺寸	Pin dimensions [mm]	0.8*1.0		
PCB板孔径	PCB Hole Diameter [mm]	∅1.6		

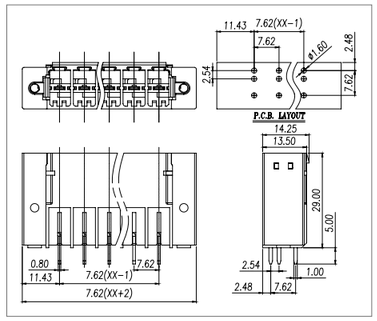

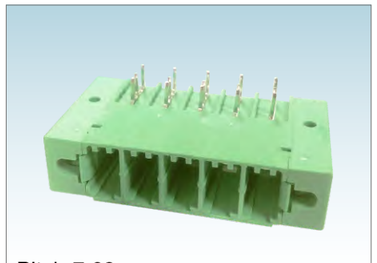

Pitch:7.62mm

WJ3EDGRHM-7.62

UL/CUL 技术参数 UL/CUL Technical Data				
等级	Use Group	B	C	D
额定电压	Rated Voltage [V]	300	300	300
额定电流	Rated Current [A]	41	41	10
接线范围 Wire Range	单芯线 Solid [AWG]	/		
	多芯线 Stranded [AWG]	/		
耐电压	Dielectric Voltage-Withstand	1.6KV		
IEC 技术参数 IEC Technical Data				
过电压类别	Surge voltage category	Ⅲ	Ⅲ	Ⅱ
污染等级	Contamination Class	3	2	2
额定电压	Rated Voltage [V]	630	630	1000
额定电流	Rated Current [A]	41	41	41
额定冲击电压	Impulse withstand voltage [KV]	6	6	6
导线截面积 Conductor cross section	硬质导线 Solid[mm²]	/		
	柔性导线 Flexible[mm²]	/		
材料 Material				
绝缘材料	Insulation Material	PA66		
阻燃等级	Inflammability Class	UL94V-0		
导体材料	Conductor Material	Copper alloy		
导体表面镀层	Conductor Plating	Sn plated		
一般参数 Other Data				
间距/极数	Pitch/Poles [mm]/[P]	7.62/2~12		
剥线长度	Stripping Length [mm]	/		
螺丝/扭矩	Screw/Torque(Max)[N.m]	/		
工作温度	Operating temperature[℃]	-40~+105		
焊锡温度	Soldering temperature	260℃/5S		
引针尺寸	Pin dimensions [mm]	0.8*1.0		
PCB板孔径	PCB Hole Diameter [mm]	∅1.6		

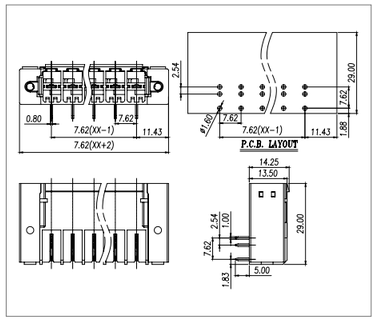



Pitch:7.62mm

WJ3EDGRRHM-7.62

UL/CUL 技术参数 UL/CUL Technical Data				
等级	Use Group	B	C	D
额定电压	Rated Voltage [V]	300	300	300
额定电流	Rated Current [A]	41	41	10
接线范围 Wire Range	单芯线 Solid [AWG]	/		
	多芯线 Stranded [AWG]	/		
耐电压	Dielectric Voltage-Withstand	1.6KV		
IEC 技术参数 IEC Technical Data				
过电压类别	Surge voltage category	Ⅲ	Ⅲ	Ⅱ
污染等级	Contamination Class	3	2	2
额定电压	Rated Voltage [V]	630	630	1000
额定电流	Rated Current [A]	41	41	41
额定冲击电压	Impulse withstand voltage [KV]	6	6	6
导线截面积 Conductor cross section	硬质导线 Solid[mm²]	/		
	柔性导线 Flexible[mm²]	/		
材料 Material				
绝缘材料	Insulation Material	PA66		
阻燃等级	Inflammability Class	UL94V-0		
导体材料	Conductor Material	Copper alloy		
导体表面镀层	Conductor Plating	Sn plated		
一般参数 Other Data				
间距/极数	Pitch/Poles [mm]/[P]	7.62/2~12		
剥线长度	Stripping Length [mm]	/		
螺丝/扭矩	Screw/Torque(Max)[N.m]	/		
工作温度	Operating temperature[℃]	-40~+105		
焊锡温度	Soldering temperature	260℃/5S		
引针尺寸	Pin dimensions [mm]	0.8*1.0		
PCB板孔径	PCB Hole Diameter [mm]	∅1.6		

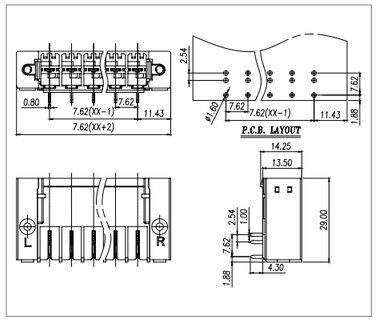

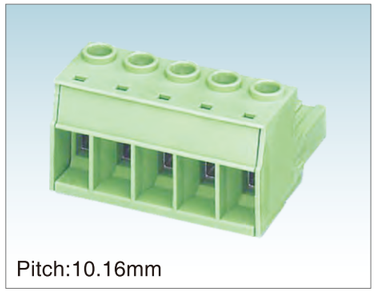

Pitch:10.16mm

WJ3EDGK-10.16

UL/CUL 技术参数 UL/CUL Technical Data				
等级	Use Group	B	C	D
额定电压	Rated Voltage [V]	600	600	600
额定电流	Rated Current [A]	55	55	5
接线范围 Wire Range	单芯线 Solid [AWG]	20~6		
	多芯线 Stranded [AWG]	20~6		
耐电压	Dielectric Voltage-Withstand	2.2KV		
IEC 技术参数 IEC Technical Data				
过电压类别	Overvoltage Category	Ⅲ	Ⅲ	Ⅱ
污染等级	Contamination Class	3	2	2
额定电压	Rated Voltage [V]	1000	1000	1000
额定电流	Rated Current [A]	76	76	76
额定冲击电压	Impulse withstand voltage [KV]	8	8	6
导线截面积 Conductor cross section	硬质导线 Solid[mm²]	0.5~16		
	柔性导线 Flexible[mm²]	0.5~16		
材料 Material				
绝缘材料	Insulation Material	PA66		
阻燃等级	Flame retardant rating	UL94V-0		
导体材料	Conductor Material	Copper alloy		
导体表面镀层	Plating of conductor surface	Sn plated		
一般参数 Other Data				
间距/极数	Pitch/Poles [mm]/[P]	10.16/2~18		
剥线长度	Stripping Length [mm]	13~14		
螺丝/扭矩	Screw/Torque(Max)[N.m]	M4/1.2		
工作温度	Operating temperature[℃]	-40~+105		
焊锡温度	Soldering temperature	/		
引针尺寸	Pin dimensions [mm]	/		
PCB板孔径	PCB Hole Diameter [mm]	/		

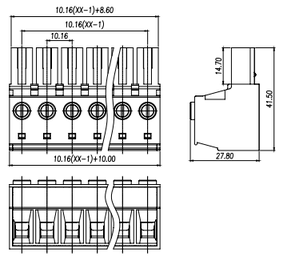

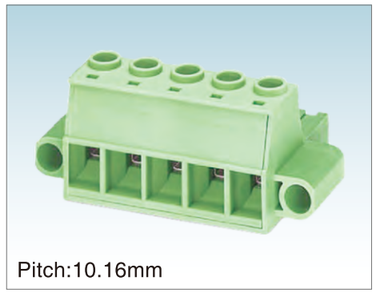

Pitch:10.16mm

WJ3EDGKM-10.16

UL/CUL 技术参数 UL/CUL Technical Data				
等级	Use Group	B	C	D
额定电压	Rated Voltage [V]	600	600	600
额定电流	Rated Current [A]	55	55	5
接线范围 Wire Range	单芯线 Solid [AWG]	20~6		
	多芯线 Stranded [AWG]	20~6		
耐电压	Dielectric Voltage-Withstand	2.2KV		
IEC 技术参数 IEC Technical Data				
过电压类别	Overvoltage Category	Ⅲ	Ⅲ	Ⅱ
污染等级	Contamination Class	3	2	2
额定电压	Rated Voltage [V]	1000	1000	1000
额定电流	Rated Current [A]	76	76	76
额定冲击电压	Impulse withstand voltage [KV]	8	8	6
导线截面积 Conductor cross section	硬质导线 Solid[mm²]	0.5~16		
	柔性导线 Flexible[mm²]	0.5~16		
材料 Material				
绝缘材料	Insulation Material	PA66		
阻燃等级	Flame retardant rating	UL94V-0		
导体材料	Conductor Material	Copper alloy		
导体表面镀层	Plating of conductor surface	Sn plated		
一般参数 Other Data				
间距/极数	Pitch/Poles [mm]/[P]	10.16/2~16		
剥线长度	Stripping Length [mm]	13-14		
螺丝/扭矩	Screw/Torque(Max)[N.m]	M4/1.2		
工作温度	Operating temperature[℃]	-40~+105		
焊锡温度	Soldering temperature	/		
引针尺寸	Pin dimensions [mm]	/		
PCB板孔径	PCB Hole Diameter [mm]	/		

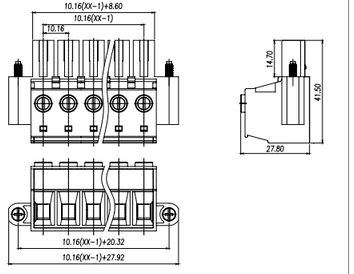

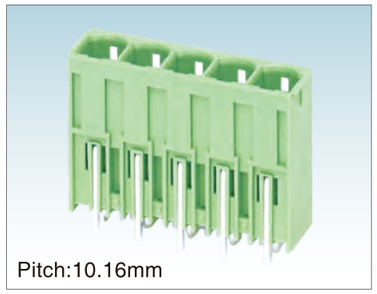

Pitch:10.16mm

WJ3EDGVC-10.16

UL/CUL 技术参数 UL/CUL Technical Data				
等级	Use Group	B	C	D
额定电压	Rated Voltage [V]	300	300	300
额定电流	Rated Current [A]	55	55	10
接线范围 Wire Range	单芯线 Solid [AWG]	/		
	多芯线 Stranded [AWG]	/		
耐电压	Dielectric Voltage-Withstand	1.6KV		
IEC 技术参数 IEC Technical Data				
过电压类别	Overvoltage Category	Ⅲ	Ⅲ	Ⅱ
污染等级	Contamination Class	3	2	2
额定电压	Rated Voltage [V]	1000	1000	1000
额定电流	Rated Current [A]	76	76	76
额定冲击电压	Impulse withstand voltage [KV]	8	8	6
导线截面积 Conductor cross section	硬质导线 Solid[mm²]	/		
	柔性导线 Flexible[mm²]	/		
材料 Material				
绝缘材料	Insulation Material	PA66		
阻燃等级	Flame retardant rating	UL94V-0		
导体材料	Conductor Material	Copper alloy		
导体表面镀层	Plating of conductor surface	Sn plated		
一般参数 Other Data				
间距/极数	Pitch/Poles [mm]/[P]	10.16/2~18		
剥线长度	Stripping Length [mm]	/		
螺丝/扭矩	Screw/Torque(Max)[N.m]	/		
工作温度	Operating temperature[℃]	-40~+105		
焊锡温度	Soldering temperature	260℃ /5S		
引针尺寸	Pin dimensions [mm]	1.0*1.2		
PCB板孔径	PCB Hole Diameter [mm]	∅1.8		

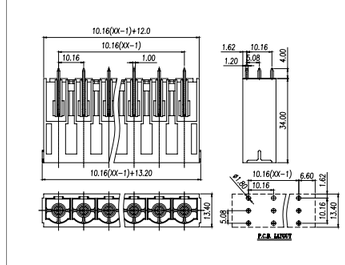

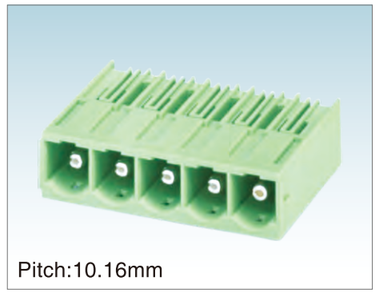

Pitch:10.16mm

WJ3EDGRC-10.16

UL/CUL 技术参数 UL/CUL Technical Data				
等级	Use Group	B	C	D
额定电压	Rated Voltage [V]	300	300	300
额定电流	Rated Current [A]	55	55	10
接线范围 Wire Range	单芯线 Solid [AWG]	/		
	多芯线 Stranded [AWG]	/		
耐电压	Dielectric Voltage-Withstand	1.6KV		
IEC 技术参数 IEC Technical Data				
过电压类别	Overvoltage Category	Ⅲ	Ⅲ	Ⅱ
污染等级	Contamination Class	3	2	2
额定电压	Rated Voltage [V]	1000	1000	1000
额定电流	Rated Current [A]	76	76	76
额定冲击电压	Impulse withstand voltage [KV]	8	8	6
导线截面积 Conductor cross section	硬质导线 Solid[mm²]	/		
	柔性导线 Flexible[mm²]	/		
材料 Material				
绝缘材料	Insulation Material	PA66		
阻燃等级	Flame retardant rating	UL94V-0		
导体材料	Conductor Material	Copper alloy		
导体表面镀层	Plating of conductor surface	Sn plated		
一般参数 Other Data				
间距/极数	Pitch/Poles [mm]/[P]	10.16/2~18		
剥线长度	Stripping Length [mm]	/		
螺丝/扭矩	Screw/Torque(Max)[N.m]	/		
工作温度	Operating temperature[℃]	-40~+105		
焊锡温度	Soldering temperature	260℃ /5S		
引针尺寸	Pin dimensions [mm]	1.0*1.2		
PCB板孔径	PCB Hole Diameter [mm]	∅1.8		

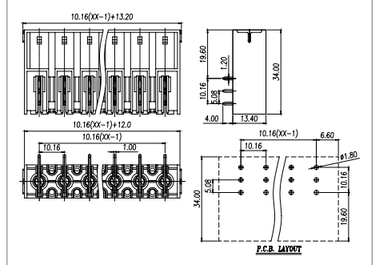

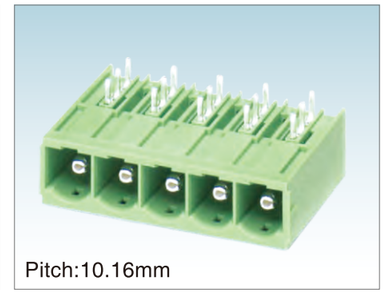

Pitch:10.16mm

WJ3EDGRRC-10.16

UL/CUL 技术参数 UL/CUL Technical Data				
等级	Use Group	B	C	D
额定电压	Rated Voltage [V]	300	300	300
额定电流	Rated Current [A]	55	55	10
接线范围 Wire Range	单芯线 Solid [AWG]	/		
	多芯线 Stranded [AWG]	/		
耐电压	Dielectric Voltage-Withstand	1.6KV		
IEC 技术参数 IEC Technical Data				
过电压类别	Overvoltage Category	Ⅲ	Ⅲ	Ⅱ
污染等级	Contamination Class	3	2	2
额定电压	Rated Voltage [V]	1000	1000	1000
额定电流	Rated Current [A]	76	76	76
额定冲击电压	Impulse withstand voltage [KV]	8	8	6
导线截面积 Conductor cross section	硬质导线 Solid[mm²]	/		
	柔性导线 Flexible[mm²]	/		
材料 Material				
绝缘材料	Insulation Material	PA66		
阻燃等级	Flame retardant rating	UL94V-0		
导体材料	Conductor Material	Copper alloy		
导体表面镀层	Plating of conductor surface	Sn plated		
一般参数 Other Data				
间距/极数	Pitch/Poles [mm]/[P]	10.16/2~18		
剥线长度	Stripping Length [mm]	/		
螺丝/扭矩	Screw/Torque(Max)[N.m]	/		
工作温度	Operating temperature[℃]	-40~+105		
焊锡温度	Soldering temperature	260℃ /5S		
引针尺寸	Pin dimensions [mm]	1.0*1.2		
PCB板孔径	PCB Hole Diameter [mm]	∅1.8		

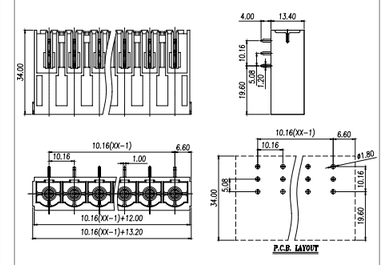

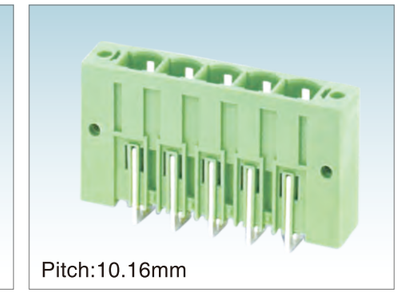

Pitch:10.16mm

WJ3EDGVM-10.16

UL/CUL 技术参数 UL/CUL Technical Data				
等级	Use Group	B	C	D
额定电压	Rated Voltage [V]	300	300	300
额定电流	Rated Current [A]	55	55	10
接线范围 Wire Range	单芯线 Solid [AWG]	/		
	多芯线 Stranded [AWG]	/		
耐电压	Dielectric Voltage-Withstand	1.6KV		
IEC 技术参数 IEC Technical Data				
过电压类别	Overvoltage Category	Ⅲ	Ⅲ	Ⅱ
污染等级	Contamination Class	3	2	2
额定电压	Rated Voltage [V]	1000	1000	1000
额定电流	Rated Current [A]	76	76	76
额定冲击电压	Impulse withstand voltage [KV]	8	8	6
导线截面积 Conductor cross section	硬质导线 Solid[mm²]	/		
	柔性导线 Flexible[mm²]	/		
材料 Material				
绝缘材料	Insulation Material	PA66		
阻燃等级	Flame retardant rating	UL94V-0		
导体材料	Conductor Material	Copper alloy		
导体表面镀层	Plating of conductor surface	Sn plated		
一般参数 Other Data				
间距/极数	Pitch/Poles [mm]/[P]	10.16/2~16		
剥线长度	Stripping Length [mm]	/		
螺丝/扭矩	Screw/Torque(Max)[N.m]	/		
工作温度	Operating temperature[℃]	-40~+105		
焊锡温度	Soldering temperature	260℃ /5S		
引针尺寸	Pin dimensions [mm]	1.0*1.2		
PCB板孔径	PCB Hole Diameter [mm]	∅1.8		

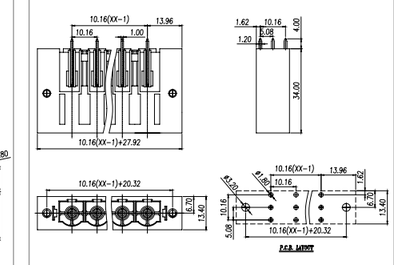

ISO14001 ISO45001 ISO9001 ISO80079-34 ISO/TS 22163

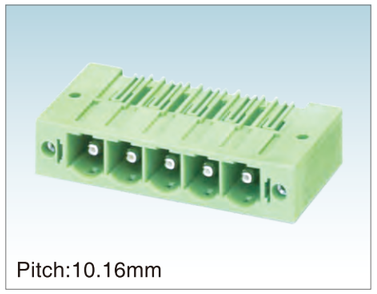

Pitch:10.16mm

WJ3EDGRM-10.16

UL/CUL 技术参数 UL/CUL Technical Data				
等级	Use Group	B	C	D
额定电压	Rated Voltage [V]	300	300	300
额定电流	Rated Current [A]	55	55	10
接线范围 Wire Range	单芯线 Solid [AWG]	/		
	多芯线 Stranded [AWG]	/		
耐电压	Dielectric Voltage-Withstand	1.6KV		
IEC 技术参数 IEC Technical Data				
过电压类别	Overvoltage Category	Ⅲ	Ⅲ	Ⅱ
污染等级	Contamination Class	3	2	2
额定电压	Rated Voltage [V]	1000	1000	1000
额定电流	Rated Current [A]	76	76	76
额定冲击电压	Impulse withstand voltage [KV]	8	8	6
导线截面积 Conductor cross section	硬质导线 Solid[mm²]	/		
	柔性导线 Flexible[mm²]	/		
材料 Material				
绝缘材料	Insulation Material	PA66		
阻燃等级	Flame retardant rating	UL94V-0		
导体材料	Conductor Material	Copper alloy		
导体表面镀层	Plating of conductor surface	Sn plated		
一般参数 Other Data				
间距/极数	Pitch/Poles [mm]/[P]	10.16/2~16		
剥线长度	Stripping Length [mm]	/		
螺丝/扭矩	Screw/Torque(Max)[N.m]	/		
工作温度	Operating temperature[℃]	-40~+105		
焊锡温度	Soldering temperature	260℃ /5S		
引针尺寸	Pin dimensions [mm]	1.0*1.2		
PCB板孔径	PCB Hole Diameter [mm]	∅1.8		

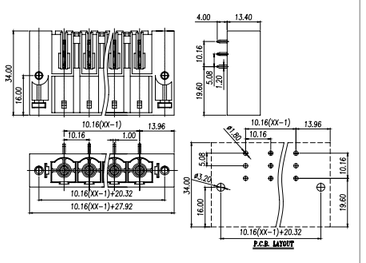

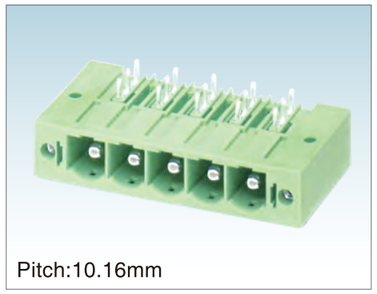

Pitch:10.16mm

WJ3EDGRRM-10.16

UL/CUL 技术参数 UL/CUL Technical Data				
等级	Use Group	B	C	D
额定电压	Rated Voltage [V]	300	300	300
额定电流	Rated Current [A]	55	55	10
接线范围 Wire Range	单芯线 Solid [AWG]	/		
	多芯线 Stranded [AWG]	/		
耐电压	Dielectric Voltage-Withstand	1.6KV		
IEC 技术参数 IEC Technical Data				
过电压类别	Overvoltage Category	Ⅲ	Ⅲ	Ⅱ
污染等级	Contamination Class	3	2	2
额定电压	Rated Voltage [V]	1000	1000	1000
额定电流	Rated Current [A]	76	76	76
额定冲击电压	Impulse withstand voltage [KV]	8	8	6
导线截面积 Conductor cross section	硬质导线 Solid[mm²]	/		
	柔性导线 Flexible[mm²]	/		
材料 Material				
绝缘材料	Insulation Material	PA66		
阻燃等级	Flame retardant rating	UL94V-0		
导体材料	Conductor Material	Copper alloy		
导体表面镀层	Plating of conductor surface	Sn plated		
一般参数 Other Data				
间距/极数	Pitch/Poles [mm]/[P]	10.16/2~16		
剥线长度	Stripping Length [mm]	/		
螺丝/扭矩	Screw/Torque(Max)[N.m]	/		
工作温度	Operating temperature[℃]	-40~+105		
焊锡温度	Soldering temperature	260℃ /5S		
引针尺寸	Pin dimensions [mm]	1.0*1.2		
PCB板孔径	PCB Hole Diameter [mm]	∅1.8		

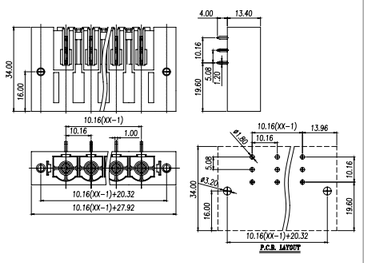

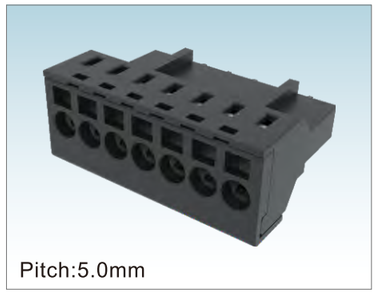

Pitch:5.0mm

WJ9KS-5.0

UL/CUL 技术参数 UL/CUL Technical Data				
等级	Use Group	B	C	D
额定电压	Rated Voltage [V]	300	-	300
额定电流	Rated Current [A]	16	-	10
接线范围 Wire Range	单芯线 Solid [AWG]	28-12		
	多芯线 Stranded [AWG]	28-12		
耐电压	Dielectric Voltage-Withstand	1.6KV		
IEC 技术参数 IEC Technical Data				
过电压类别	Overvoltage Category	Ⅲ	Ⅲ	Ⅱ
污染等级	Contamination Class	3	2	2
额定电压	Rated Voltage [V]	160	160	320
额定电流	Rated Current [A]	20	20	20
额定冲击电压	Impulse withstand voltage [KV]	4	4	4
导线截面积 Conductor cross section	硬质导线 Solid[mm²]	0.2-2.5		
	柔性导线 Flexible[mm²]	0.2-2.5		
材料 Material				
绝缘材料	Insulation Material	PA66		
阻燃等级	Flame retardant rating	UL94V-0		
导体材料	Conductor Material	Copper alloy		
导体表面镀层	Plating of conductor surface	Au plated area		
一般参数 Other Data				
间距/极数	Pitch/Poles [mm]/[P]	5.0/02,04-14		
剥线长度	Stripping Length [mm]	7-8		
螺丝/扭矩	Screw/Torque(Max)[N.m]	/		
工作温度	Operating temperature[℃]	-40~+105		
焊锡温度	Soldering temperature	/		
引针尺寸	Pin dimensions [mm]	/		
PCB板孔径	PCB Hole Diameter [mm]	/		

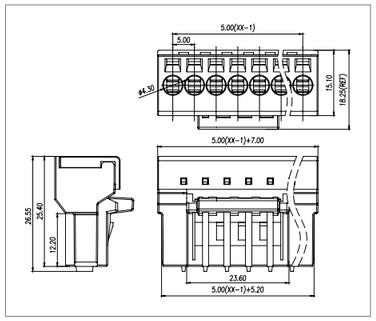

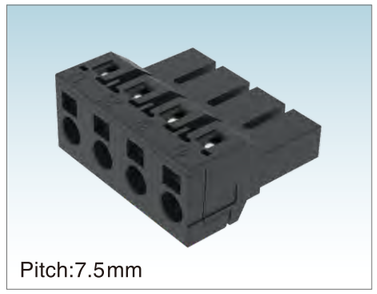

Pitch:7.5mm

WJ9KS-7.5

UL/CUL 技术参数 UL/CUL Technical Data				
等级	Use Group	B	C	D
额定电压	Rated Voltage [V]	300	300	600
额定电流	Rated Current [A]	16	16	5
接线范围 Wire Range	单芯线 Solid [AWG]	28-12		
	多芯线 Stranded [AWG]	28-12		
耐电压	Dielectric Voltage-Withstand	1.6KV		
IEC 技术参数 IEC Technical Data				
过电压类别	Overvoltage Category	Ⅲ	Ⅲ	Ⅱ
污染等级	Contamination Class	3	2	2
额定电压	Rated Voltage [V]	500	630	1000
额定电流	Rated Current [A]	20	20	20
额定冲击电压	Impulse withstand voltage [KV]	6	6	6
导线截面积 Conductor cross section	硬质导线 Solid[mm²]	0.2-2.5		
	柔性导线 Flexible[mm²]	0.2-2.5		
材料 Material				
绝缘材料	Insulation Material	PA66		
阻燃等级	Flame retardant rating	UL94V-0		
导体材料	Conductor Material	Copper alloy		
导体表面镀层	Plating of conductor surface	Au plated area		
一般参数 Other Data				
间距/极数	Pitch/Poles [mm]/[P]	7.5/02-09,11		
剥线长度	Stripping Length [mm]	7-8		
螺丝/扭矩	Screw/Torque(Max)[N.m]	/		
工作温度	Operating temperature[℃]	-40~+105		
焊锡温度	Soldering temperature	/		
引针尺寸	Pin dimensions [mm]	/		
PCB板孔径	PCB Hole Diameter [mm]	/		

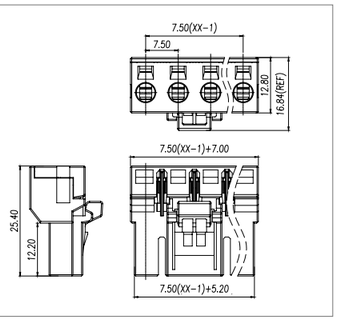

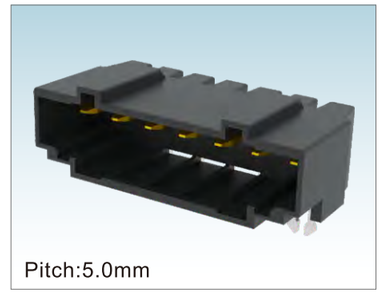

Pitch:5.0mm

WJ9RC-5.0

UL/CUL 技术参数 UL/CUL Technical Data				
等级	Use Group	B	C	D
额定电压	Rated Voltage [V]	300	-	300
额定电流	Rated Current [A]	16	-	10
接线范围 Wire Range	单芯线 Solid [AWG]	/		
	多芯线 Stranded [AWG]	/		
耐电压	Dielectric Voltage-Withstand	1.6KV		
IEC 技术参数 IEC Technical Data				
过电压类别	Overvoltage Category	Ⅲ	Ⅲ	Ⅱ
污染等级	Contamination Class	3	2	2
额定电压	Rated Voltage [V]	160	160	320
额定电流	Rated Current [A]	20	20	20
额定冲击电压	Impulse withstand voltage [KV]	4	4	4
导线截面积 Conductor cross section	硬质导线 Solid[mm²]	/		
	柔性导线 Flexible[mm²]	/		
材料 Material				
绝缘材料	Insulation Material	PA66		
阻燃等级	Flame retardant rating	UL94V-0		
导体材料	Conductor Material	Copper alloy		
导体表面镀层	Plating of conductor surface	Au plated area		
一般参数 Other Data				
间距/极数	Pitch/Poles [mm]/[P]	5.0/02,04-14		
剥线长度	Stripping Length [mm]	/		
螺丝/扭矩	Screw/Torque(Max)[N.m]	/		
工作温度	Operating temperature[℃]	-40~+105		
焊锡温度	Soldering temperature	260℃ /5S		
引针尺寸	Pin dimensions [mm]	0.7*0.9		
PCB板孔径	PCB Hole Diameter [mm]	∅1.4		

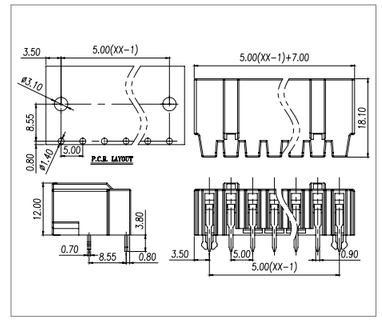

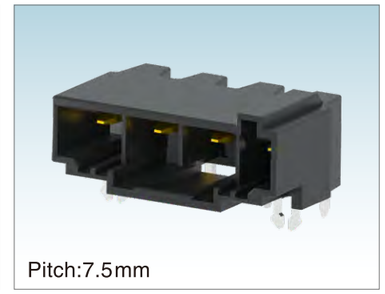

Pitch:7.5mm

WJ9RC-7.5

UL/CUL 技术参数 UL/CUL Technical Data				
等级	Use Group	B	C	D
额定电压	Rated Voltage [V]	300	300	600
额定电流	Rated Current [A]	16	16	5
接线范围 Wire Range	单芯线 Solid [AWG]	/		
	多芯线 Stranded [AWG]	/		
耐电压	Dielectric Voltage-Withstand	1.6KV		
IEC 技术参数 IEC Technical Data				
过电压类别	Overvoltage Category	Ⅲ	Ⅲ	Ⅱ
污染等级	Contamination Class	3	2	2
额定电压	Rated Voltage [V]	500	630	1000
额定电流	Rated Current [A]	20	20	20
额定冲击电压	Impulse withstand voltage [KV]	6	6	6
导线截面积 Conductor cross section	硬质导线 Solid[mm²]	/		
	柔性导线 Flexible[mm²]	/		
材料 Material				
绝缘材料	Insulation Material	LCP		
阻燃等级	Flame retardant rating	UL94V-0		
导体材料	Conductor Material	Copper alloy		
导体表面镀层	Plating of conductor surface	Au plated area		
一般参数 Other Data				
间距/极数	Pitch/Poles [mm]/[P]	7.5/02-09,11		
剥线长度	Stripping Length [mm]	/		
螺丝/扭矩	Screw/Torque(Max)[N.m]	/		
工作温度	Operating temperature[℃]	-40~+130		
焊锡温度	Soldering temperature	285℃		
引针尺寸	Pin dimensions [mm]	0.7*0.9		
PCB板孔径	PCB Hole Diameter [mm]	∅1.4		

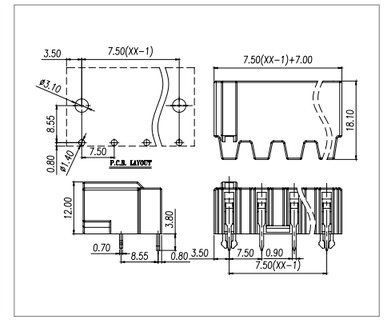

ISO14001 ISO45001 ISO9001 ISO80079-34 ISO/TS 22163

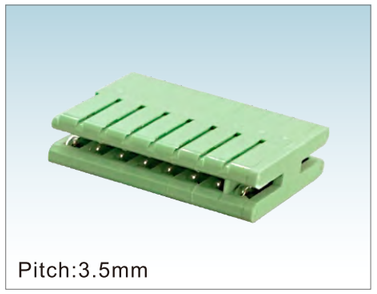

WJPCP-3.5

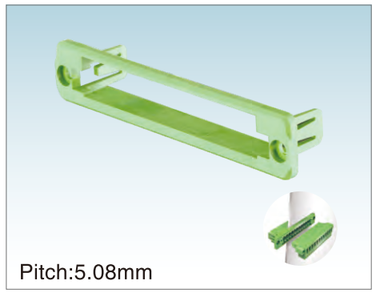

WJM01-5.08

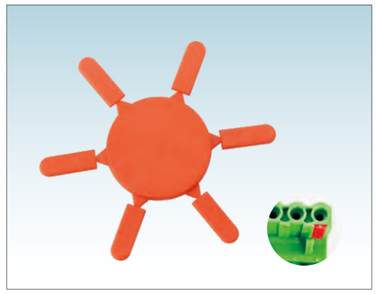

WJ2EDG-PWI

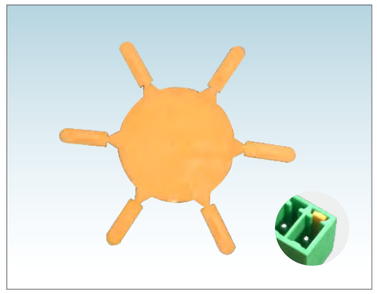

WJ15EDG-PWI-2.5

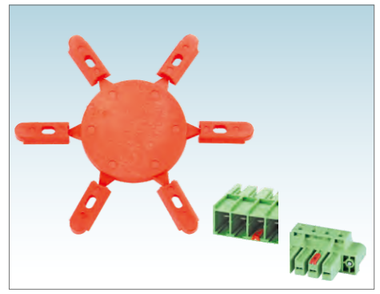

WJ3EDG-PWI

UL/CUL 技术参数 UL/CUL Technical Data				
等级	Use Group	B	C	D
额定电压	Rated Voltage [V]	150	-	-
额定电流	Rated Current [A]	8	-	-
接线范围 Wire Range	单芯线 Solid [AWG]	/		
	多芯线 Stranded [AWG]	/		
耐电压	Dielectric Voltage-Withstand	1.3KV		
IEC 技术参数 IEC Technical Data				
过电压类别	Surge voltage category	Ⅲ	Ⅲ	Ⅱ
污染等级	Contamination Class	3	2	2
额定电压	Rated Voltage [V]	160	200	320
额定电流	Rated Current [A]	8	8	8
额定冲击电压	Impulse withstand voltage [KV]	2.5	2.5	2.5
导线截面积 Conductor cross section	硬质导线 Solid[mm²]	/		
	柔性导线 Flexible[mm²]	/		
材料 Material				
绝缘材料	Insulation Material	PA66		
阻燃等级	Inflammability Class	UL94V-0		
导体材料	Conductor Material	Copper alloy		
导体表面镀层	Conductor Plating	Sn plated		
一般参数 Other Data				
间距/极数	Pitch/Poles [mm]/[P]	3.5/2-24		
剥线长度	Stripping Length [mm]	/		
螺丝/扭矩	Screw/Torque(Max)[N.m]	/		
工作温度	Operating temperature[℃]	-40~+105		
焊锡温度	Soldering temperature	/		
引针尺寸	Pin dimensions [mm]	/		
PCB板孔径	PCB Hole Diameter [mm]	/		

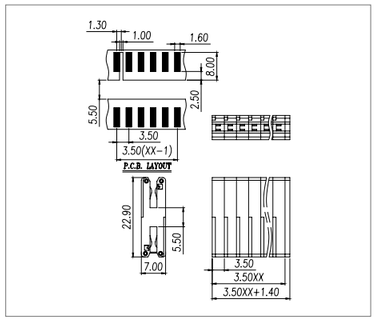

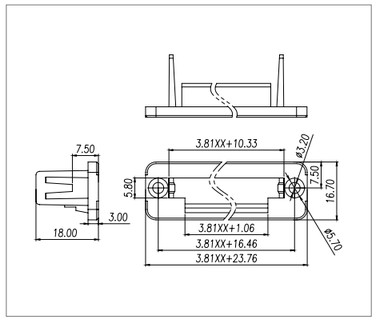

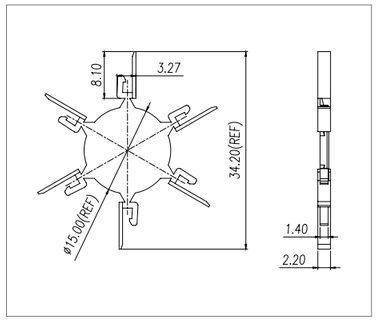

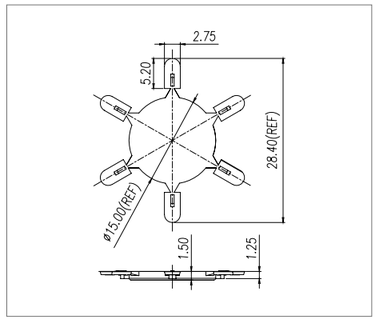

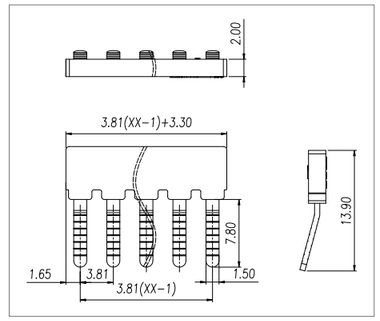



WJM02-3.81

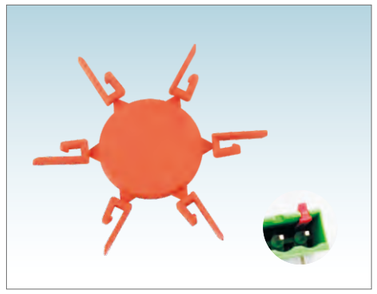

WJ2EDG-PWP

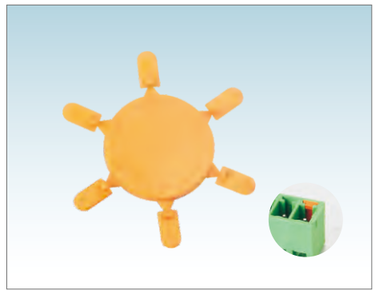

WJ15EDG-PWP



WJG04-3.81

插拔式产品互配选型参考表 Plug-in Type Product Matched Reference Table

PCB Headers / Plugs	WJ2EDGV-3.81	WJ2EDGVM-3.81	WJ2EDGV-5.0/5.08	WJ2EDGV-10.0/10.16	WJ2EDGVM-5.0/5.08	WJ2EDGVM-10.0/10.16	WJ2EDGV-THT-5.0/5.08	WJ2EDGVM-THT-5.0/5.08	WJ2EDGRR-5.0/5.08	WJ2EDGRRM-5.0/5.08	WJ2EDGVG-5.08	WJ2EDGVT-5.0/5.08	WJ2EDGVH-5.0/5.08	WJ2EDGVTM-5.0/5.08	WJ2EDG LF-5.0	WJ2EDGVH B-THR-5.0		WJ2EDGVHB M-THR-5.0	WJ2EDGVHB N-THR-5.0	WJ2EDGJ -5.08	WJ2EDGL-5.0/5.08	WJ2EDGLM-5.0/5.08	WJ2EDGKD R-5.0/5.08	WJ2EDGKD RM-5.0/5.08	WJ2EDGKD RN-5.0/5.08	WJ2EDGKD RG-5.0/5.08	WJ2EDGKR -5.0/5.08	WJ2EDGKR M-5.0/5.08	WJ2EDGKR N-5.0/5.08	WJ2EDGKR Z-5.0/5.08	WJ2EDGKR ZM-5.0/5.08	WJ2CDGVC -5.08	WJ2CDGVM -5.08	WJ2CDGM -5.0/5.08
	WJ2EDGR-3.81	WJ2EDGRM-3.81	WJ2EDGR-5.0/5.08	WJ2EDGR-10.0/10.16	WJ2EDGRM-5.0/5.08	WJ2EDGRM-10.0/10.16	WJ2EDGR-THT-5.0/5.08	WJ2EDGRM-THT-5.0/5.08	WJ2EDGRR C-5.0/5.08		WJ2EDGRG-5.08	WJ2EDGRT-5.0/5.08	WJ2EDGRH-5.0/5.08	WJ2EDGRTM -5.0/5.08	WJ2EDG RF-5.0	WJ2EDGRH B-THR-5.0		WJ2EDGRHB M-THR-5.0	WJ2EDGRHB N-THR-5.0		WJ2EDGLC-5.0/5.08											WJ2CDGRC -5.08	WJ2CDGRM -5.08	
	WJ2EDGVC-3.81		WJ2EDGVC-5.0/5.08	WJ2EDGVC-10.0/10.16			WJ2EDGVC-THT-5.0/5.08					WJ2EDGVTC -5.0/5.08		WJ2EDGVHM -5.0/5.08	WJ2EDG LF-THR-5.0																		
	WJ2EDGRC-3.81		WJ2EDGRC-5.0/5.08	WJ2EDGRC-10.0/10.16			WJ2EDGRC-THT-5.0/5.08					WJ2EDGRTC -5.0/5.08		WJ2EDGRHM -5.0/5.08	WJ2EDG RF-THR-5.0																		
WJ2EDGKL-3.81	●																																	
WJ2EDGKLM-3.81		●																																
WJ2EDGK-5.0/5.08			●				●		●			●	●		●						●		●				●			●			●	
WJ2EDGK-10.0/10.16				●																														
WJ2EDGKM-5.0/5.08					●			●		●				●								●			●			●				●	●
WJ2EDGKM-10.0/10.16						●																												
WJ2EDGKA-5.0/5.08			●				●		●			●	●								●		●				●			●				
WJ2EDGKAM-5.0/5.08					●			●		●				●								●			●			●				●	●
WJ2EDGKB-5.0/5.08			●				●		●			●	●								●		●				●			●				
WJ2EDGKBM-5.0/5.08					●			●		●				●								●			●			●				●	●
WJ2EDGKC-5.05/5.08			●				●		●			●	●								●		●				●			●				
WJ2EDGKCM-5.0/5.08					●			●		●				●								●			●			●				●	●
WJ2EDGKD-5.0/5.08			●				●		●			●	●								●		●				●			●				
WJ2EDGKDM-5.0/5.08					●			●		●				●								●			●			●				●	●
WJ2EDGKDG-5.0/5.08											●															●								
WJ2EDGKDA-5.0/5.08			●				●		●												●		●				●			●				
WJ2EDGKDAM-5.0/5.08					●			●		●												●			●			●						●
WJ2EDGKDB-5.0/5.08			●				●		●												●		●				●			●				
WJ2EDGKDBM-5.0/5.08					●			●		●												●			●									●
WJ2EDGKDH-5.08			●				●		●												●		●				●			●				
WJ2EDGKDHM-5.08					●			●														●			●				●					●
WJ2EDGKDHG-5.08											●															●								
WJ2EDGKDF-5.0/5.08			●				●		●						●								●											
WJ2EDGKDFM-5.0/5.08					●			●																	●									●
WJ2EDGKDFG-5.0/5.08											●															●								
WJ2EDGKF-5.0/5.08			●				●		●						●						●		●				●			●				
WJ2EDGKFM-5.0/5.08					●			●																										
WJ2EDGKH-5.08			●				●		●												●		●				●			●				
WJ2EDGKHM-5.08					●			●														●			●									●
WJ2EDGKAH-5.08			●				●		●												●		●				●			●				
WJ2EDGKAHM-5.08					●			●														●			●									●
WJ2EDGKJ-5.08																				●														
WJ2EDGKZ-5.0/5.08			●				●		●			●	●								●		●				●			●				
WJ2EDGKZM-5.0/5.08					●			●		●												●			●			●						●
WJ2EDGKL-5.0/5.08			●				●		●			●	●								●		●				●			●				
WJ2EDGKLM-5.0/5.08					●			●		●				●								●			●			●						●
WJ2EDGKN-5.0																●																		
WJ2EDGKNM-5.0																		●																
WJ2EDGKNG-5.0																			●															
WJ2EDGA-5.08			●				●		●														●				●			●				
WJ2EDGAM-5.08																								●				●			●			
WJ2EDGB-5.08			●				●		●														●				●			●				
WJ2EDGBM-5.08																								●				●			●			

插拔式产品互配选型参考表 Plug-in Type Product Matched Reference Table

Plugs \ PCB Headers	WJ15EDGVHB-THT-3.5/3.81	WJ15EDGVHBM-THT-3.5/3.81	WJ15EDGVHBN-THT-3.5/3.81	WJ15EDGV H3C-THT-3.5	WJ15EDGV H3M-THT-3.5	WJ15EDGV H3N-THT-3.5	WJ15EDGV H3C-3.5	WJ15EDGV H3M-3.5	WJ15EDGV H3N-3.5	WJ15EDGV HC-THR-3.5	WJ15EDGV HCM-THR-3.5	WJ15EDGV HSC-THR-2.54	WJ15EDGV HSM-THR-2.54	WJ15EDGV HS-THR-3.5	WJ15EDGV HSM-THR-3.5	WJ15EDGV HS-3.5	WJ15EDGV HSM-3.5	WJ15EDG KNR-3.5	WJ15EDG KNRT-3.5	WJ15EDG VG-3.5/3.81
	WJ15EDGRHB-THT-3.5/3.81	WJ15EDGRHBM-THT-3.5/3.81	WJ15EDGRHBN-THT-3.5/3.81	WJ15EDGR H3C-THT-3.5	WJ15EDGR H3M-THT-3.5	WJ15EDGR H3N-THT-3.5	WJ15EDGR H3C-3.5	WJ15EDGR H3M-3.5	WJ15EDGR H3N-3.5	WJ15EDGR HC-THR-3.5	WJ15EDGR HCM-THR-3.5	WJ15EDGR HSC-THR-2.54	WJ15EDGR HSM-THR-2.54	WJ15EDGR HS-THR-3.5	WJ15EDGR HSM-THR-3.5	WJ15EDGR HS-3.5	WJ15EDGR HSM-3.5			WJ15EDG RG-3.5/3.81
														WJ15EDGV HSC-THR-3.5		WJ15EDGV HSC-3.5				
														WJ15EDGR HSC-THR-3.5		WJ15EDGR HSC-3.5				
WJ15EDGKN-3.5/3.81	●			●			●											●		
WJ15EDGKNM-3.5/3.81		●			●			●												
WJ15EDGKNG-3.5/3.81			●			●			●										●	●
WJ15EDGKN-B-3.5/3.81	●																	●		
WJ15EDGKNM-B-3.5/3.81		●																		
WJ15EDGKNG-B-3.5/3.81			●																●	
WJ15EDGKNH-3.5										●										
WJ15EDGKNHM-3.5											●									
WJ15EDGKNHG-3.5											●									
WJ15EDGKNHB-2.54												●								
WJ15EDGKNHBM-2.54													●							
WJ15EDGKNHBG-2.54													●							
WJ15EDGKNHB-3.5														●		●				
WJ15EDGKNHBM-3.5															●		●			
WJ15EDGKNHBG-3.5															●		●			
WJ15EDGKSH-3.5														●						
WJ15EDGKSHM-3.5															●		●			
WJ15EDGKSHG-3.5															●		●			

Plugs \ PCB Headers	WJ15EDG VC-2.5	WJ15EDG VC-2.54	WJ15EDGVC-THR-3.5/3.81	WJ15EDGVM-THR-3.5/3.81	WJ15EDG KR-3.5/3.81	WJ15EDG KRM-3.5/3.81	WJ15EDG KRN-3.5/3.81	WJ15EDG VF-3.81	WJ15EDG GB-3.81	WJ15EDG GBM-3.81	WJ15EDG LC-3.5/3.81	WJ15EDG LM-3.5/3.81	WJ15EDG VC-3.5/3.81	WJ15EDG VM-3.5/3.81	WJ15EDG KNRG-3.5	WJ15CDG M-3.81	WJ15EDG VT-3.5/3.81	WJ15EDG VTM-3.5/3.81	WJ15EDG VH-3.5/3.81	WJ15EDG VHM-3.5/3.81	WJ15EDG VC-5.08	WJ15EDG VM-5.08
	WJ15EDG RC-2.5	WJ15EDG RC-2.54	WJ15EDGRC-THR-3.5/3.81	WJ15EDGRM-THR-3.5/3.81									WJ15EDG RC-3.5/3.81	WJ15EDG RM-3.5/3.81			WJ15EDG RT-3.5/3.81	WJ15EDG RTM-3.5/3.81	WJ15EDG RH-3.5/3.81	WJ15EDG RHM-3.5/3.81	WJ15EDG RC-5.08	WJ15EDG RM-5.08
	WJ15EDG VH-2.5																					
	WJ15EDG RH-2.5																					
WJ15EDGKD-2.5	●																					
WJ15EDGK-2.54		●																				
WJ15EDGK-3.5/3.81			●		●			●	●		●		●				●		●			
WJ15EDGKM-3.5/3.81				●			●			●		●		●		●		●		●		
WJ15EDGKA-3.5/3.81			●		●			●	●		●		●				●		●			
WJ15EDGKAM-3.5/3.81				●			●			●		●		●		●		●		●		
WJ15EDGKB-3.5/3.81			●		●			●	●		●		●				●		●			
WJ15EDGKBM-3.5/3.81				●			●			●		●		●		●		●		●		
WJ15EDGKC-3.81			●		●			●	●		●		●				●		●			
WJ15EDGKCM-3.81				●			●			●		●		●		●		●		●		
WJ15EDGKD-3.5/3.81			●		●			●	●		●		●				●		●			
WJ15EDGKDM-3.5/3.81				●			●			●		●		●		●		●		●		
WJ15EDGKDH-3.5/3.81			●		●						●		●									
WJ15EDGKDHM-3.5/3.81				●			●					●		●								
WJ15EDGA-3.5/3.81			●		●						●		●									
WJ15EDGB-3.5/3.81			●		●						●		●									
WJ15EDGAM-3.5/3.81						●																
WJ15EDGBM-3.5/3.81						●																
WJ15EDGAG-3.5															●							
WJ15EDGBG-3.5															●							
WJ15EDGK-5.08																					●	
WJ15EDGKM-5.08																						●

插拔式产品互配选型参考表 Plug-in Type Product Matched Reference Table

Plugs \ PCB Headers	WJ9RC-5.0	WJ9RC-7.5											
WJ9KS-5.0	●												
WJ9KS-7.5		●											

Plugs \ PCB Headers	WJ3EDG VC-7.62	WJ3EDG VM-7.62	WJ3CDG M-7.62	WJ3EDG VH-7.62	WJ3EDG VHM-7.62	WJ3EDG VC-10.16	WJ3EDG VM-10.16						
	WJ3EDG RC-7.62	WJ3EDG RM-7.62		WJ3EDG RH-7.62	WJ3EDG RHM-7.62	WJ3EDG RC-10.16	WJ3EDG RM-10.16						
		WJ3EDG VZM-7.62		WJ3EDG RRH-7.62	WJ3EDG RRHM-7.62	WJ3EDG RRC-10.16	WJ3EDG RRM-10.16						
		WJ3EDG RZM-7.62											
WJ3EDGK-7.62	●		●										
WJ3EDGKM-7.62		●											
WJ3EDGKH-7.62				●									
WJ3EDGKHM-7.62					●								
WJ3EDGK-10.16						●							
WJ3EDGKM-10.16							●						

Plugs \ PCB Headers	WJ2EDGV-7.5/7.62	WJ2EDGVM-7.5/7.62	WJ2EDGVG-7.5/7.62	WJ2EDGKR-7.62	WJ2EDGKRM-7.62	WJ2EDGKRN-7.62									
	WJ2EDGR-7.5/7.62	WJ2EDGRM-7.5/7.62	WJ2EDGRG-7.5/7.62												
	WJ2EDGVC-7.5/7.62														
	WJ2EDGRC-7.5/7.62														
WJ2EDGK-7.5/7.62	●			●											
WJ2EDGKM-7.5/7.62		●				●									
WJ2EDGKA-7.5/7.62	●			●											
WJ2EDGKAM-7.5/7.62		●				●									
WJ2EDGKB-7.5/7.62	●			●											
WJ2EDGKBM-7.5/7.62		●				●									
WJ2EDGKD-7.5/7.62	●			●											
WJ2EDGKDM-7.5/7.62		●				●									
WJ2EDGKDG-7.5/7.62			●												
WJ2EDGA-7.62	●			●											
WJ2EDGAM-7.62					●										
WJ2EDGB-7.62	●			●											
WJ2EDGBM-7.62					●										

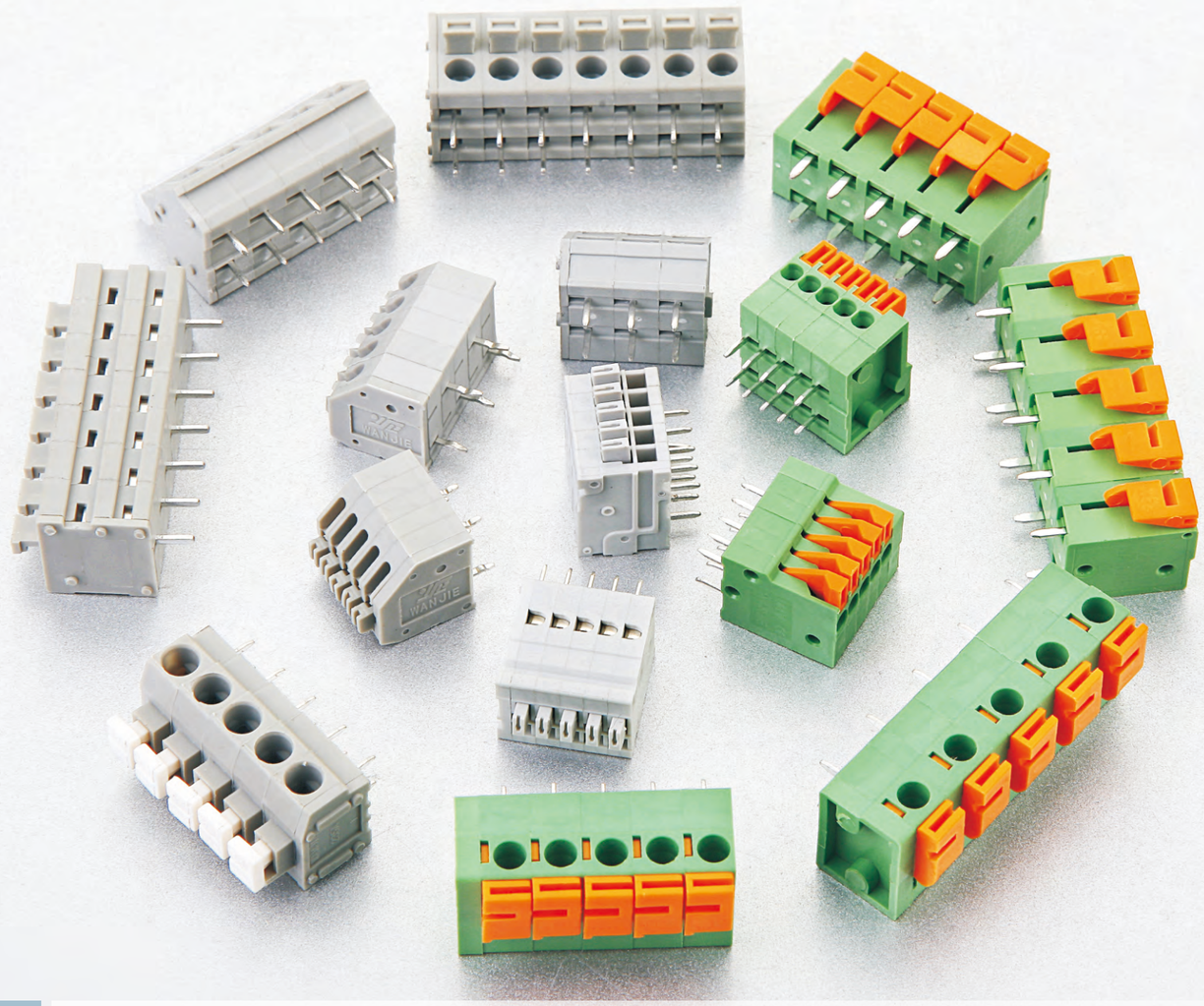

弹簧式PCB接线端子
PCB SPRING TERMINAL BLOCK

弹簧式PCB接线端子，接线方式分笼式弹簧连接和V形弹簧连接，可以连接截面为0.08mm²至16mm²的所有类型的导线，间距2.5mm至10.16mm可供选择，可以同螺钉连接PCB接线端子相互替代使用，增加了灵活性。产品设计符合IEC60998、UL1059、UL486E、CSA C22.2 No.158等国际标准。

PCB Spring terminal blocks, available with two connection methods cage clamp contact and dish clamp contact. Provide the wire size from 0.08mm² to 16mm², Available with different pitches from 2.5mm to10.16 mm. It can be used instead of printed circuit universal screw terminal blocks, more flexible. The product is designed in accordance with IEC 60998, UL1059, CSA C22.2 NO.158 standards.

ISO14001 ISO45001 ISO9001 ISO80079-34 ISO/TS 22163

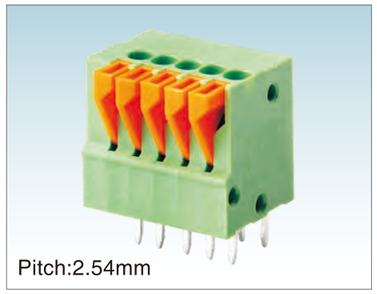

Pitch:2.54mm

WJ141V-2.54

UL/CUL 技术参数 UL/CUL Technical Data				
等级	Use Group	B	C	D
额定电压	Rated Voltage [V]	150	-	-
额定电流	Rated Current [A]	4	-	-
接线范围 Wire Range	单芯线 Solid [AWG]	26~18		
	多芯线 Stranded [AWG]	26~18		
耐电压	Dielectric Voltage-Withstand	1.3KV		
IEC 技术参数 IEC Technical Data				
过电压类别	Overvoltage Category	Ⅲ	Ⅲ	Ⅱ
污染等级	Contamination Class	3	2	2
额定电压	Rated Voltage [V]	63	160	320
额定电流	Rated Current [A]	6	6	6
额定冲击电压	Impulse withstand voltage [KV]	2.5	2.5	2.5
导线截面积 Conductor cross section	硬质导线 Solid[mm²]	0.2~0.5		
	柔性导线 Flexible[mm²]	0.2~0.5		
材料 Material				
绝缘材料	Insulation Material	PA66		
阻燃等级	Flame retardant rating	UL94V-0		
导体材料	Conductor Material	Copper alloy		
导体表面镀层	Plating of conductor surface	Sn Plated		
一般参数 Other Data				
间距/极数	Pitch/Poles [mm]/[P]	2.54/1~30		
剥线长度	Stripping Length [mm]	11		
螺丝/扭矩	Screw/Torque(Max)[N.m]	/		
工作温度	Operating temperature[℃]	-40~+105		
焊锡温度	Soldering temperature	260℃/5S		
引针尺寸	Pin dimensions [mm]	0.7*0.5		
PCB板孔径	PCB Hole Diameter [mm]	∅1.2		

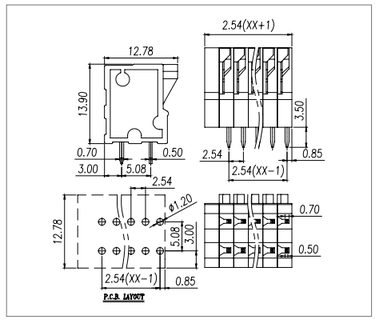

Pitch:2.54mm

WJ141R-2.54

UL/CUL 技术参数 UL/CUL Technical Data				
等级	Use Group	B	C	D
额定电压	Rated Voltage [V]	150	-	-
额定电流	Rated Current [A]	4	-	-
接线范围 Wire Range	单芯线 Solid [AWG]	26~18		
	多芯线 Stranded [AWG]	26~18		
耐电压	Dielectric Voltage-Withstand	1.3KV		
IEC 技术参数 IEC Technical Data				
过电压类别	Overvoltage Category	Ⅲ	Ⅲ	Ⅱ
污染等级	Contamination Class	3	2	2
额定电压	Rated Voltage [V]	63	160	320
额定电流	Rated Current [A]	6	6	6
额定冲击电压	Impulse withstand voltage [KV]	2.5	2.5	2.5
导线截面积 Conductor cross section	硬质导线 Solid[mm²]	0.2~0.5		
	柔性导线 Flexible[mm²]	0.2~0.5		
材料 Material				
绝缘材料	Insulation Material	PA66		
阻燃等级	Flame retardant rating	UL94V-0		
导体材料	Conductor Material	Copper alloy		
导体表面镀层	Plating of conductor surface	Sn Plated		
一般参数 Other Data				
间距/极数	Pitch/Poles [mm]/[P]	2.54/1~30		
剥线长度	Stripping Length [mm]	11		
螺丝/扭矩	Screw/Torque(Max)[N.m]	/		
工作温度	Operating temperature[℃]	-40~+105		
焊锡温度	Soldering temperature	260℃/5S		
引针尺寸	Pin dimensions [mm]	0.8*0.5		
PCB板孔径	PCB Hole Diameter [mm]	∅1.1		

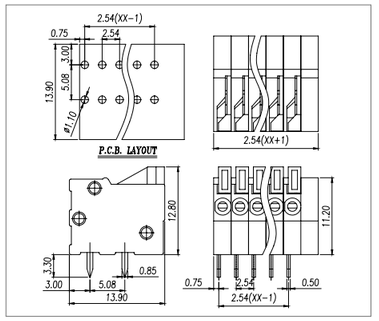

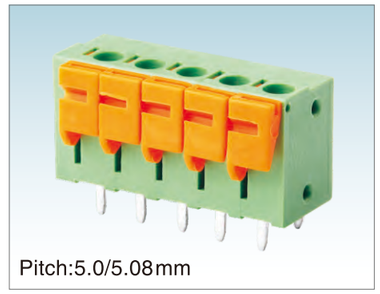

Pitch:5.0/5.08mm

WJ142V-5.0/5.08

UL/CUL 技术参数 UL/CUL Technical Data				
等级	Use Group	B	C	D
额定电压	Rated Voltage [V]	300	-	300
额定电流	Rated Current [A]	10	-	10
接线范围 Wire Range	单芯线 Solid [AWG]	24~14		
	多芯线 Stranded [AWG]	24~14		
耐电压	Dielectric Voltage-Withstand	1.6KV		
IEC 技术参数 IEC Technical Data				
过电压类别	Overvoltage Category	Ⅲ	Ⅲ	Ⅱ
污染等级	Contamination Class	3	2	2
额定电压	Rated Voltage [V]	320	320	630
额定电流	Rated Current [A]	15	15	15
额定冲击电压	Impulse withstand voltage [KV]	4	4	4
导线截面积 Conductor cross section	硬质导线 Solid[mm²]	0.2~1.5		
	柔性导线 Flexible[mm²]	0.2~1.5		
材料 Material				
绝缘材料	Insulation Material	PA66		
阻燃等级	Flame retardant rating	UL94V-0		
导体材料	Conductor Material	Copper alloy		
导体表面镀层	Plating of conductor surface	Sn plated		
一般参数 Other Data				
间距/极数	Pitch/Poles [mm]/[P]	5.0,5.08/1~30		
剥线长度	Stripping Length [mm]	10		
螺丝/扭矩	Screw/Torque(Max)[N.m]	/		
工作温度	Operating temperature[℃]	-40~+105		
焊锡温度	Soldering temperature	260℃/5S		
引针尺寸	Pin dimensions [mm]	1.0*0.5		
PCB板孔径	PCB Hole Diameter [mm]	∅1.4		

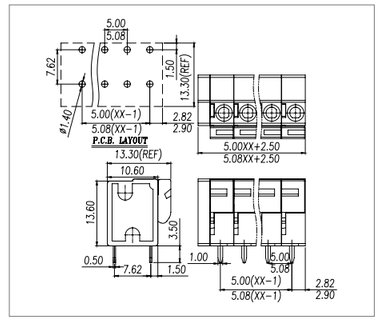

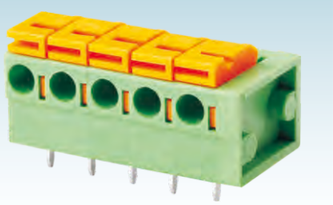

Pitch:5.0/5.08mm

WJ142R-5.0/5.08

UL/CUL 技术参数 UL/CUL Technical Data

等级 Use Group		B	C	D
额定电压 Rated Voltage [V]		300	-	300
额定电流 Rated Current [A]		10	-	10
接线范围 Wire Range	单芯线 Solid [AWG]	24~14		
	多芯线 Stranded [AWG]	24~14		
耐电压 Dielectric Voltage-Withstand		1.6KV		

IEC 技术参数 IEC Technical Data

过电压类别 Overvoltage Category		Ⅲ	Ⅲ	Ⅱ
污染等级 Contamination Class		3	2	2
额定电压 Rated Voltage [V]		320	320	630
额定电流 Rated Current [A]		15	15	15
额定冲击电压 Impulse withstand voltage [KV]		4	4	4
导线截面积 Conductor cross section	硬质导线 Solid[mm²]	0.2~1.5		
	柔性导线 Flexible[mm²]	0.2~1.5		

材料 Material

绝缘材料 Insulation Material	PA66
阻燃等级 Flame retardant rating	UL94V-0
导体材料 Conductor Material	Copper alloy
导体表面镀层 Plating of conductor surface	Sn plated

一般参数 Other Data

间距/极数 Pitch/Poles [mm]/[P]	5.0,5.08/1~30
剥线长度 Stripping Length [mm]	10~11
螺丝/扭矩 Screw/Torque(Max)[N.m]	/
工作温度 Operating temperature[℃]	-40~+105
焊锡温度 Soldering temperature	260℃/5S
引针尺寸 Pin dimensions [mm]	1.0*0.5
PCB板孔径 PCB Hole Diameter [mm]	∅1.4

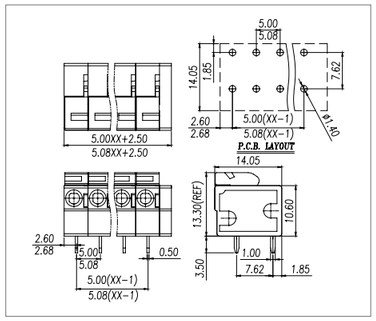



Pitch:7.5/7.62mm

WJ142V-7.5/7.62

UL/CUL 技术参数 UL/CUL Technical Data

等级 Use Group		B	C	D
额定电压 Rated Voltage [V]		300	-	300
额定电流 Rated Current [A]		10	-	10
接线范围 Wire Range	单芯线 Solid [AWG]	24~14		
	多芯线 Stranded [AWG]	24~14		
耐电压 Dielectric Voltage-Withstand		1.6KV		

IEC 技术参数 IEC Technical Data

过电压类别 Overvoltage Category		Ⅲ	Ⅲ	Ⅱ
污染等级 Contamination Class		3	2	2
额定电压 Rated Voltage [V]		500	630	1000
额定电流 Rated Current [A]		15	15	15
额定冲击电压 Impulse withstand voltage [KV]		6	6	6
导线截面积 Conductor cross section	硬质导线 Solid[mm²]	0.2~1.5		
	柔性导线 Flexible[mm²]	0.2~1.5		

材料 Material

绝缘材料 Insulation Material	PA66
阻燃等级 Flame retardant rating	UL94V-0
导体材料 Conductor Material	Copper alloy
导体表面镀层 Plating of conductor surface	Sn plated

一般参数 Other Data

间距/极数 Pitch/Poles [mm]/[P]	7.5,7.62/2~24
剥线长度 Stripping Length [mm]	10
螺丝/扭矩 Screw/Torque(Max)[N.m]	/
工作温度 Operating temperature[℃]	-40~+105
焊锡温度 Soldering temperature	260℃/5S
引针尺寸 Pin dimensions [mm]	1.0*0.5
PCB板孔径 PCB Hole Diameter [mm]	∅1.4

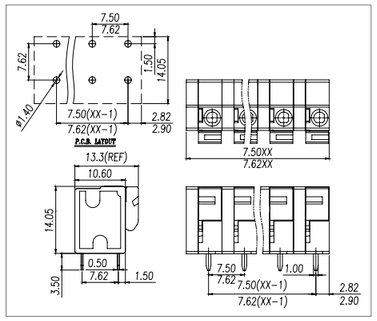



Pitch:7.5/7.62mm

WJ142R-7.5/7.62

UL/CUL 技术参数 UL/CUL Technical Data

等级 Use Group		B	C	D
额定电压 Rated Voltage [V]		300	-	300
额定电流 Rated Current [A]		10	-	10
接线范围 Wire Range	单芯线 Solid [AWG]	24~14		
	多芯线 Stranded [AWG]	24~14		
耐电压 Dielectric Voltage-Withstand		1.6KV		

IEC 技术参数 IEC Technical Data

过电压类别 Overvoltage Category		Ⅲ	Ⅲ	Ⅱ
污染等级 Contamination Class		3	2	2
额定电压 Rated Voltage [V]		500	630	1000
额定电流 Rated Current [A]		15	15	15
额定冲击电压 Impulse withstand voltage [KV]		6	6	6
导线截面积 Conductor cross section	硬质导线 Solid[mm²]	0.2~1.5		
	柔性导线 Flexible[mm²]	0.2~1.5		

材料 Material

绝缘材料 Insulation Material	PA66
阻燃等级 Flame retardant rating	UL94V-0
导体材料 Conductor Material	Copper alloy
导体表面镀层 Plating of conductor surface	Sn plated

一般参数 Other Data

间距/极数 Pitch/Poles [mm]/[P]	7.5,7.62/2~24
剥线长度 Stripping Length [mm]	10~11
螺丝/扭矩 Screw/Torque(Max)[N.m]	/
工作温度 Operating temperature[℃]	-40~+105
焊锡温度 Soldering temperature	260℃/5S
引针尺寸 Pin dimensions [mm]	1.0*0.5
PCB板孔径 PCB Hole Diameter [mm]	∅1.4

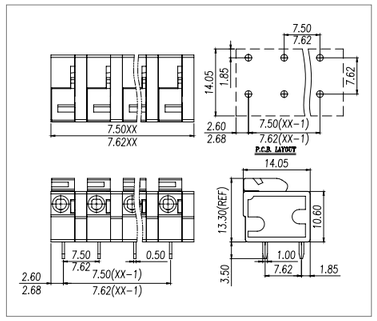

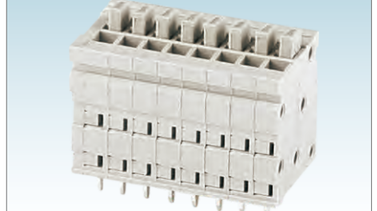

Pitch:2.5mm

WJ211V-2.5

UL/CUL 技术参数 UL/CUL Technical Data

等级 Use Group		B	C	D
额定电压 Rated Voltage [V]		150	-	-
额定电流 Rated Current [A]		5	-	-
接线范围 Wire Range	单芯线 Solid [AWG]	26~18		
	多芯线 Stranded [AWG]	26~18		
耐电压 Dielectric Voltage-Withstand		1.3KV		

IEC 技术参数 IEC Technical Data

过电压类别 Overvoltage Category		Ⅲ	Ⅲ	Ⅱ
污染等级 Contamination Class		3	2	2
额定电压 Rated Voltage [V]		63	160	320
额定电流 Rated Current [A]		6	6	6
额定冲击电压 Impulse withstand voltage [KV]		2.5	2.5	2.5
导线截面积 Conductor cross section	硬质导线 Solid[mm²]	0.2~0.5		
	柔性导线 Flexible[mm²]	0.2~0.5		

材料 Material

绝缘材料 Insulation Material	PA66
阻燃等级 Flame retardant rating	UL94V-0
导体材料 Conductor Material	Copper alloy
导体表面镀层 Plating of conductor surface	Sn Plated

一般参数 Other Data

间距/极数 Pitch/Poles [mm]/[P]	2.5/1-30
剥线长度 Stripping Length [mm]	11
螺丝/扭矩 Screw/Torque(Max)[N.m]	/
工作温度 Operating temperature[℃]	-40~+105
焊锡温度 Soldering temperature	260℃/5S
引针尺寸 Pin dimensions [mm]	0.7*0.4
PCB板孔径 PCB Hole Diameter [mm]	∅1.0

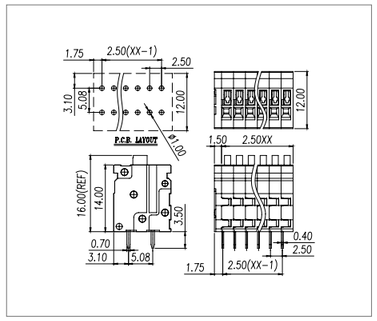

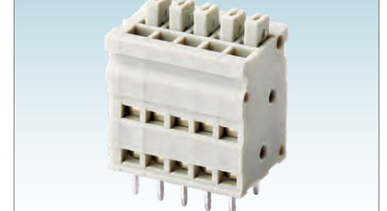

Pitch:2.54mm

WJ211V-2.54

UL/CUL 技术参数 UL/CUL Technical Data

等级 Use Group		B	C	D
额定电压 Rated Voltage [V]		150	-	-
额定电流 Rated Current [A]		5	-	-
接线范围 Wire Range	单芯线 Solid [AWG]	26~18		
	多芯线 Stranded [AWG]	26~18		
耐电压 Dielectric Voltage-Withstand		1.3KV		

IEC 技术参数 IEC Technical Data

过电压类别 Overvoltage Category		Ⅲ	Ⅲ	Ⅱ
污染等级 Contamination Class		3	2	2
额定电压 Rated Voltage [V]		63	160	320
额定电流 Rated Current [A]		6	6	6
额定冲击电压 Impulse withstand voltage [KV]		2.5	2.5	2.5
导线截面积 Conductor cross section	硬质导线 Solid[mm²]	0.2~0.5		
	柔性导线 Flexible[mm²]	0.2~0.5		

材料 Material

绝缘材料 Insulation Material	PA66
阻燃等级 Flame retardant rating	UL94V-0
导体材料 Conductor Material	Copper alloy
导体表面镀层 Plating of conductor surface	Sn plated

一般参数 Other Data

间距/极数 Pitch/Poles [mm]/[P]	2.54/1~30
剥线长度 Stripping Length [mm]	11
螺丝/扭矩 Screw/Torque(Max)[N.m]	/
工作温度 Operating temperature[℃]	-40~+105
焊锡温度 Soldering temperature	260℃/5S
引针尺寸 Pin dimensions [mm]	0.7*0.4
PCB板孔径 PCB Hole Diameter [mm]	∅1.0

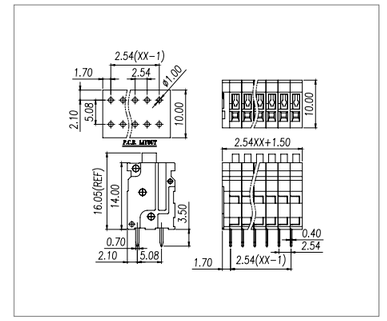

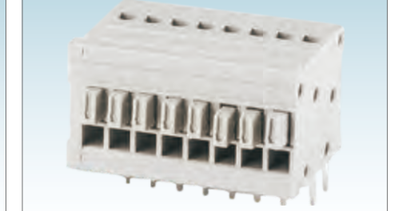

Pitch:2.5mm

WJ211R-2.5

UL/CUL 技术参数 UL/CUL Technical Data

等级 Use Group		B	C	D
额定电压 Rated Voltage [V]		150	-	-
额定电流 Rated Current [A]		5	-	-
接线范围 Wire Range	单芯线 Solid [AWG]	26~18		
	多芯线 Stranded [AWG]	26~18		
耐电压 Dielectric Voltage-Withstand		1.3KV		

IEC 技术参数 IEC Technical Data

过电压类别 Overvoltage Category		Ⅲ	Ⅲ	Ⅱ
污染等级 Contamination Class		3	2	2
额定电压 Rated Voltage [V]		63	160	320
额定电流 Rated Current [A]		6	6	6
额定冲击电压 Impulse withstand voltage [KV]		2.5	2.5	2.5
导线截面积 Conductor cross section	硬质导线 Solid[mm²]	0.2~0.5		
	柔性导线 Flexible[mm²]	0.2~0.5		

材料 Material

绝缘材料 Insulation Material	PA66
阻燃等级 Flame retardant rating	UL94V-0
导体材料 Conductor Material	Copper alloy
导体表面镀层 Plating of conductor surface	Sn plated

一般参数 Other Data

间距/极数 Pitch/Poles [mm]/[P]	2.5/1~30
剥线长度 Stripping Length [mm]	11
螺丝/扭矩 Screw/Torque(Max)[N.m]	/
工作温度 Operating temperature[℃]	-40~+105
焊锡温度 Soldering temperature	260℃/5S
引针尺寸 Pin dimensions [mm]	0.7*0.4
PCB板孔径 PCB Hole Diameter [mm]	∅1.0

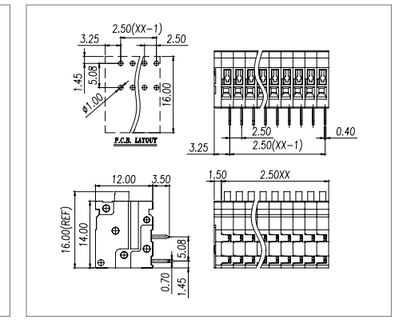



Pitch:2.54mm

WJ211R-2.54

UL/CUL 技术参数 UL/CUL Technical Data				
等级	Use Group	B	C	D
额定电压	Rated Voltage [V]	150	-	-
额定电流	Rated Current [A]	5	-	-
接线范围 Wire Range	单芯线 Solid [AWG]	26~18		
	多芯线 Stranded [AWG]	26~18		
耐电压	Dielectric Voltage-Withstand	1.3KV		
IEC 技术参数 IEC Technical Data				
过电压类别	Overvoltage Category	Ⅲ	Ⅲ	Ⅱ
污染等级	Contamination Class	3	2	2
额定电压	Rated Voltage [V]	63	160	320
额定电流	Rated Current [A]	6	6	6
额定冲击电压	Impulse withstand voltage [KV]	2.5	2.5	2.5
导线截面积 Conductor cross section	硬质导线 Solid[mm²]	0.2~0.5		
	柔性导线 Flexible[mm²]	0.2~0.5		
材料 Material				
绝缘材料	Insulation Material	PA66		
阻燃等级	Flame retardant rating	UL94V-0		
导体材料	Conductor Material	Copper alloy		
导体表面镀层	Plating of conductor surface	Sn plated		
一般参数 Other Data				
间距/极数	Pitch/Poles [mm]/[P]	2.54/1~30		
剥线长度	Stripping Length [mm]	11		
螺丝/扭矩	Screw/Torque(Max)[N.m]	/		
工作温度	Operating temperature[℃]	-40~+105		
焊锡温度	Soldering temperature	260℃/5S		
引针尺寸	Pin dimensions [mm]	0.7*0.4		
PCB板孔径	PCB Hole Diameter [mm]	∅1.0		

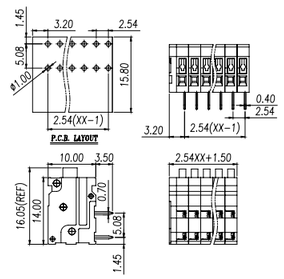

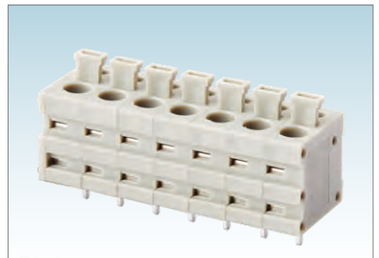

Pitch:5.0mm

WJ211V-5.0

UL/CUL 技术参数 UL/CUL Technical Data				
等级	Use Group	B	C	D
额定电压	Rated Voltage [V]	300	-	-
额定电流	Rated Current [A]	10	-	-
接线范围 Wire Range	单芯线 Solid [AWG]	26~14		
	多芯线 Stranded [AWG]	26~14		
耐电压	Dielectric Voltage-Withstand	1.6KV		
IEC 技术参数 IEC Technical Data				
过电压类别	Overvoltage Category	Ⅲ	Ⅲ	Ⅱ
污染等级	Contamination Class	3	2	2
额定电压	Rated Voltage [V]	320	320	630
额定电流	Rated Current [A]	17.5	17.5	17.5
额定冲击电压	Impulse withstand voltage [KV]	4	4	4
导线截面积 Conductor cross section	硬质导线 Solid[mm²]	0.2~1.5		
	柔性导线 Flexible[mm²]	0.2~1.5		
材料 Material				
绝缘材料	Insulation Material	PA66		
阻燃等级	Flame retardant rating	UL94V-0		
导体材料	Conductor Material	Copper alloy		
导体表面镀层	Plating of conductor surface	Sn plated		
一般参数 Other Data				
间距/极数	Pitch/Poles [mm]/[P]	5.0/1~30		
剥线长度	Stripping Length [mm]	8		
螺丝/扭矩	Screw/Torque(Max)[N.m]	/		
工作温度	Operating temperature[℃]	-40~+105		
焊锡温度	Soldering temperature	260℃/5S		
引针尺寸	Pin dimensions [mm]	0.9*0.6		
PCB板孔径	PCB Hole Diameter [mm]	∅1.3		

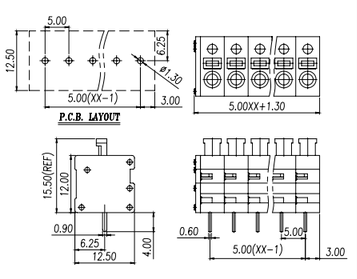

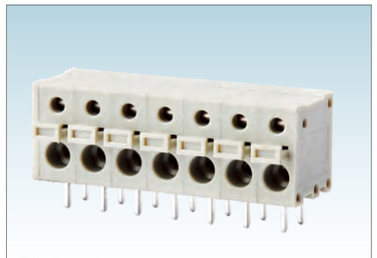

Pitch:5.0mm

WJ211R-5.0

UL/CUL 技术参数 UL/CUL Technical Data				
等级	Use Group	B	C	D
额定电压	Rated Voltage [V]	300	-	-
额定电流	Rated Current [A]	10	-	-
接线范围 Wire Range	单芯线 Solid [AWG]	26~14		
	多芯线 Stranded [AWG]	26~14		
耐电压	Dielectric Voltage-Withstand	1.6KV		
IEC 技术参数 IEC Technical Data				
过电压类别	Overvoltage Category	Ⅲ	Ⅲ	Ⅱ
污染等级	Contamination Class	3	2	2
额定电压	Rated Voltage [V]	320	320	630
额定电流	Rated Current [A]	17.5	17.5	17.5
额定冲击电压	Impulse withstand voltage [KV]	4	4	4
导线截面积 Conductor cross section	硬质导线 Solid[mm²]	0.2~1.5		
	柔性导线 Flexible[mm²]	0.2~1.5		
材料 Material				
绝缘材料	Insulation Material	PA66		
阻燃等级	Flame retardant rating	UL94V-0		
导体材料	Conductor Material	Copper alloy		
导体表面镀层	Plating of conductor surface	Sn plated		
一般参数 Other Data				
间距/极数	Pitch/Poles [mm]/[P]	5.0/1~30		
剥线长度	Stripping Length [mm]	8		
螺丝/扭矩	Screw/Torque(Max)[N.m]	/		
工作温度	Operating temperature[℃]	-40~+105		
焊锡温度	Soldering temperature	260℃/5S		
引针尺寸	Pin dimensions [mm]	0.9*0.6		
PCB板孔径	PCB Hole Diameter [mm]	∅1.3		

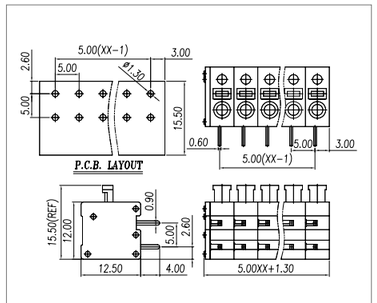

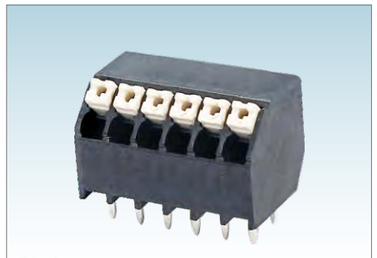

Pitch:3.5mm

WJ212S-THR-3.5

UL/CUL 技术参数 UL/CUL Technical Data				
等级	Use Group	B	C	D
额定电压	Rated Voltage [V]	300	-	300
额定电流	Rated Current [A]	10	-	10
接线范围 Wire Range	单芯线 Solid [AWG]	24~16		
	多芯线 Stranded [AWG]	24~16		
耐电压	Dielectric Voltage-Withstand	1.6KV		
IEC 技术参数 IEC Technical Data				
过电压类别	Overvoltage Category	Ⅲ	Ⅲ	Ⅱ
污染等级	Contamination Class	3	2	2
额定电压	Rated Voltage [V]	160	160	320
额定电流	Rated Current [A]	17.5	17.5	17.5
额定冲击电压	Impulse withstand voltage [KV]	2.5	2.5	2.5
导线截面积 Conductor cross section	硬质导线 Solid[mm²]	0.2~1.5		
	柔性导线 Flexible[mm²]	0.2~1.5		
材料 Material				
绝缘材料	Insulation Material	LCP		
阻燃等级	Flame retardant rating	UL94V-0		
导体材料	Conductor Material	Copper alloy		
导体表面镀层	Plating of conductor surface	Sn Plated		
一般参数 Other Data				
间距/极数	Pitch/Poles [mm]/[P]	3.5/2~24		
剥线长度	Stripping Length [mm]	7~8		
螺丝/扭矩	Screw/Torque(Max)[N.m]	/		
工作温度	Operating temperature[℃]	-40~+130		
焊锡温度	Soldering temperature	285℃/10S		
引针尺寸	Pin dimensions [mm]	0.8*0.4		
PCB板孔径	PCB Hole Diameter [mm]	∅1.2		

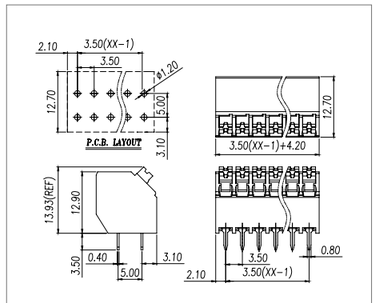

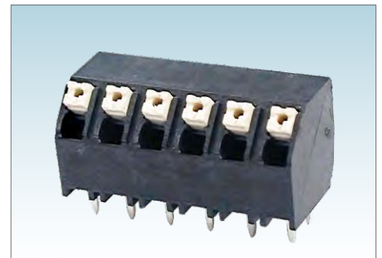

Pitch:5.0mm

WJ212S-THR-5.0

UL/CUL 技术参数 UL/CUL Technical Data				
等级	Use Group	B	C	D
额定电压	Rated Voltage [V]	300	-	300
额定电流	Rated Current [A]	10	-	10
接线范围 Wire Range	单芯线 Solid [AWG]	24~16		
	多芯线 Stranded [AWG]	24~16		
耐电压	Dielectric Voltage-Withstand	1.6KV		
IEC 技术参数 IEC Technical Data				
过电压类别	Overvoltage Category	Ⅲ	Ⅲ	Ⅱ
污染等级	Contamination Class	3	2	2
额定电压	Rated Voltage [V]	250	320	500
额定电流	Rated Current [A]	17.5	17.5	17.5
额定冲击电压	Impulse withstand voltage [KV]	4	4	4
导线截面积 Conductor cross section	硬质导线 Solid[mm²]	0.2~1.5		
	柔性导线 Flexible[mm²]	0.2~1.5		
材料 Material				
绝缘材料	Insulation Material	LCP		
阻燃等级	Flame retardant rating	UL94V-0		
导体材料	Conductor Material	Copper alloy		
导体表面镀层	Plating of conductor surface	Sn plated		
一般参数 Other Data				
间距/极数	Pitch/Poles [mm]/[P]	5.0/2~24		
剥线长度	Stripping Length [mm]	7~8		
螺丝/扭矩	Screw/Torque(Max)[N.m]	/		
工作温度	Operating temperature[℃]	-40~+130		
焊锡温度	Soldering temperature	285℃/10S		
引针尺寸	Pin dimensions [mm]	0.8*0.4		
PCB板孔径	PCB Hole Diameter [mm]	∅1.2		

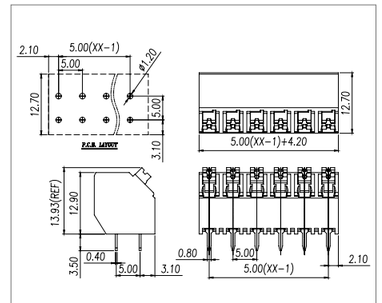

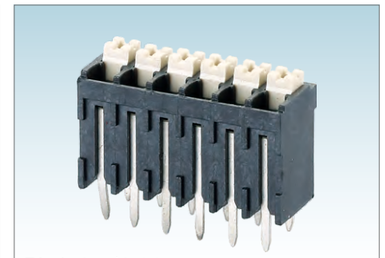

Pitch:3.5/3.81mm

WJ212V-THR-3.5/3.81

UL/CUL 技术参数 UL/CUL Technical Data				
等级	Use Group	B	C	D
额定电压	Rated Voltage [V]	300	-	300
额定电流	Rated Current [A]	10	-	10
接线范围 Wire Range	单芯线 Solid [AWG]	24~16		
	多芯线 Stranded [AWG]	24~16		
耐电压	Dielectric Voltage-Withstand	1.6KV		
IEC 技术参数 IEC Technical Data				
过电压类别	Overvoltage Category	Ⅲ	Ⅲ	Ⅱ
污染等级	Contamination Class	3	2	2
额定电压	Rated Voltage [V]	160	160	320
额定电流	Rated Current [A]	17.5	17.5	17.5
额定冲击电压	Impulse withstand voltage [KV]	2.5	2.5	2.5
导线截面积 Conductor cross section	硬质导线 Solid[mm²]	0.2~1.5		
	柔性导线 Flexible[mm²]	0.2~1.5		
材料 Material				
绝缘材料	Insulation Material	LCP		
阻燃等级	Flame retardant rating	UL94V-0		
导体材料	Conductor Material	Copper alloy		
导体表面镀层	Plating of conductor surface	Sn plated		
一般参数 Other Data				
间距/极数	Pitch/Poles [mm]/[P]	3.5,3.81/2~24		
剥线长度	Stripping Length [mm]	7~8		
螺丝/扭矩	Screw/Torque(Max)[N.m]	/		
工作温度	Operating temperature[℃]	-40~+130		
焊锡温度	Soldering temperature	285℃/10S		
引针尺寸	Pin dimensions [mm]	0.8*0.4		
PCB板孔径	PCB Hole Diameter [mm]	∅1.2		

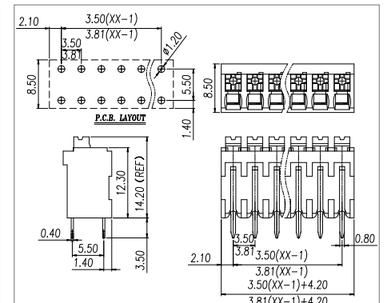

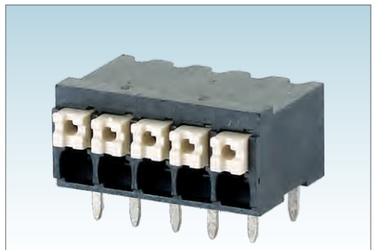

Pitch:3.5/3.81mm

WJ212R-THR-3.5/3.81

UL/CUL 技术参数 UL/CUL Technical Data				
等级	Use Group	B	C	D
额定电压	Rated Voltage [V]	300	-	300
额定电流	Rated Current [A]	10	-	10
接线范围 Wire Range	单芯线 Solid [AWG]	24~16		
	多芯线 Stranded [AWG]	24~16		
耐电压	Dielectric Voltage-Withstand	1.6KV		

IEC 技术参数 IEC Technical Data				
过电压类别	Overvoltage Category	Ⅲ	Ⅲ	Ⅱ
污染等级	Contamination Class	3	2	2
额定电压	Rated Voltage [V]	160	160	320
额定电流	Rated Current [A]	17.5	17.5	17.5
额定冲击电压	Impulse withstand voltage [KV]	2.5	2.5	2.5
导线截面积 Conductor cross section	硬质导线 Solid[mm²]	0.2~1.5		
	柔性导线 Flexible[mm²]	0.2~1.5		

材料 Material		
绝缘材料	Insulation Material	LCP
阻燃等级	Flame retardant rating	UL94V-0
导体材料	Conductor Material	Copper alloy
导体表面镀层	Plating of conductor surface	Sn plated

一般参数 Other Data		
间距/极数	Pitch/Poles [mm]/[P]	3.5,3.81/2~24
剥线长度	Stripping Length [mm]	7~8
螺丝/扭矩	Screw/Torque(Max)[N.m]	/
工作温度	Operating temperature[℃]	-40~+130
焊锡温度	Soldering temperature	285℃ /10S
引针尺寸	Pin dimensions [mm]	0.8*0.4
PCB板孔径	PCB Hole Diameter [mm]	∅1.2

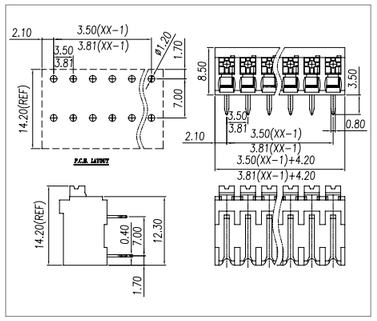

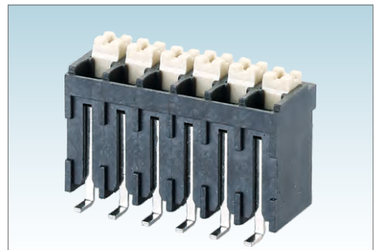

Pitch:3.5/3.81mm

WJ212VS-THR-3.5/3.81

UL/CUL 技术参数 UL/CUL Technical Data				
等级	Use Group	B	C	D
额定电压	Rated Voltage [V]	300	-	300
额定电流	Rated Current [A]	10	-	10
接线范围 Wire Range	单芯线 Solid [AWG]	24~16		
	多芯线 Stranded [AWG]	24~16		
耐电压	Dielectric Voltage-Withstand	1.6KV		

IEC 技术参数 IEC Technical Data				
过电压类别	Overvoltage Category	Ⅲ	Ⅲ	Ⅱ
污染等级	Contamination Class	3	2	2
额定电压	Rated Voltage [V]	160	160	320
额定电流	Rated Current [A]	17.5	17.5	17.5
额定冲击电压	Impulse withstand voltage [KV]	2.5	2.5	2.5
导线截面积 Conductor cross section	硬质导线 Solid[mm²]	0.2~1.5		
	柔性导线 Flexible[mm²]	0.2~1.5		

材料 Material		
绝缘材料	Insulation Material	LCP
阻燃等级	Flame retardant rating	UL94V-0
导体材料	Conductor Material	Copper alloy
导体表面镀层	Plating of conductor surface	Sn plated

一般参数 Other Data		
间距/极数	Pitch/Poles [mm]/[P]	3.5,3.81/2~24
剥线长度	Stripping Length [mm]	7~8
螺丝/扭矩	Screw/Torque(Max)[N.m]	/
工作温度	Operating temperature[℃]	-40~+130
焊锡温度	Soldering temperature	285℃ /10S
引针尺寸	Pin dimensions [mm]	0.8*0.4
PCB板孔径	PCB Hole Diameter [mm]	/

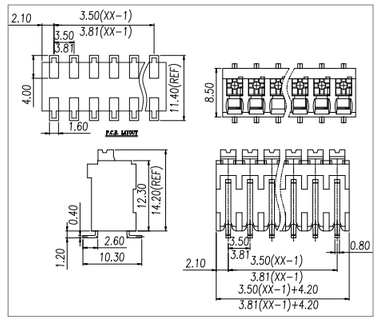

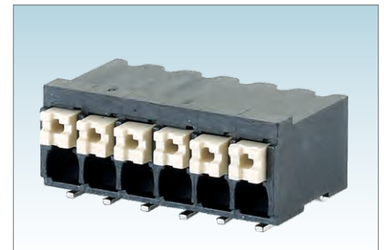

Pitch:3.5/3.81mm

WJ212RS-THR-3.5/3.81

UL/CUL 技术参数 UL/CUL Technical Data				
等级	Use Group	B	C	D
额定电压	Rated Voltage [V]	300	-	300
额定电流	Rated Current [A]	10	-	10
接线范围 Wire Range	单芯线 Solid [AWG]	24~16		
	多芯线 Stranded [AWG]	24~16		
耐电压	Dielectric Voltage-Withstand	1.6KV		

IEC 技术参数 IEC Technical Data				
过电压类别	Overvoltage Category	Ⅲ	Ⅲ	Ⅱ
污染等级	Contamination Class	3	2	2
额定电压	Rated Voltage [V]	160	160	320
额定电流	Rated Current [A]	17.5	17.5	17.5
额定冲击电压	Impulse withstand voltage [KV]	2.5	2.5	2.5
导线截面积 Conductor cross section	硬质导线 Solid[mm²]	0.2~1.5		
	柔性导线 Flexible[mm²]	0.2~1.5		

材料 Material		
绝缘材料	Insulation Material	LCP
阻燃等级	Flame retardant rating	UL94V-0
导体材料	Conductor Material	Copper alloy
导体表面镀层	Plating of conductor surface	Sn plated

一般参数 Other Data		
间距/极数	Pitch/Poles [mm]/[P]	3.5,3.81/2~24
剥线长度	Stripping Length [mm]	7~8
螺丝/扭矩	Screw/Torque(Max)[N.m]	/
工作温度	Operating temperature[℃]	-40~+130
焊锡温度	Soldering temperature	285℃ /10S
引针尺寸	Pin dimensions [mm]	0.8*0.4
PCB板孔径	PCB Hole Diameter [mm]	/

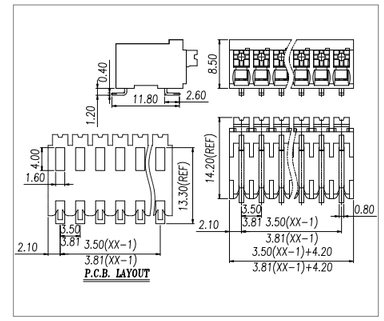

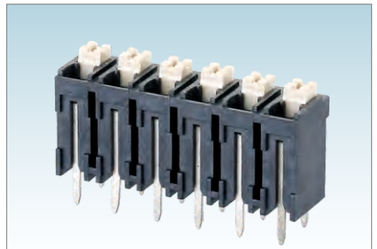

Pitch:5.0/5.08mm

WJ212V-THR-5.0/5.08

UL/CUL 技术参数 UL/CUL Technical Data				
等级	Use Group	B	C	D
额定电压	Rated Voltage [V]	300	-	300
额定电流	Rated Current [A]	10	-	10
接线范围 Wire Range	单芯线 Solid [AWG]	24~16		
	多芯线 Stranded [AWG]	24~16		
耐电压	Dielectric Voltage-Withstand	1.6KV		

IEC 技术参数 IEC Technical Data				
过电压类别	Overvoltage Category	Ⅲ	Ⅲ	Ⅱ
污染等级	Contamination Class	3	2	2
额定电压	Rated Voltage [V]	250	320	500
额定电流	Rated Current [A]	17.5	17.5	17.5
额定冲击电压	Impulse withstand voltage [KV]	4	4	4
导线截面积 Conductor cross section	硬质导线 Solid[mm²]	0.2~1.5		
	柔性导线 Flexible[mm²]	0.2~1.5		

材料 Material		
绝缘材料	Insulation Material	LCP
阻燃等级	Flame retardant rating	UL94V-0
导体材料	Conductor Material	Copper alloy
导体表面镀层	Plating of conductor surface	Sn plated

一般参数 Other Data		
间距/极数	Pitch/Poles [mm]/[P]	5.0,5.08/2~24
剥线长度	Stripping Length [mm]	7~8
螺丝/扭矩	Screw/Torque(Max)[N.m]	/
工作温度	Operating temperature[℃]	-40~+130
焊锡温度	Soldering temperature	285℃ /10S
引针尺寸	Pin dimensions [mm]	0.8*0.4
PCB板孔径	PCB Hole Diameter [mm]	∅1.2

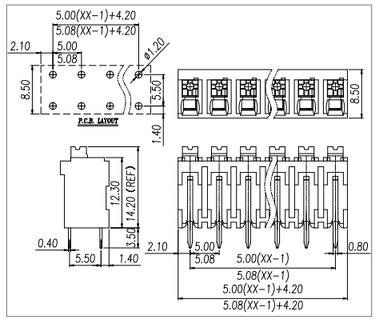

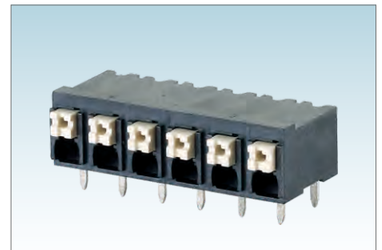

Pitch:5.0/5.08mm

WJ212R-THR-5.0/5.08

UL/CUL 技术参数 UL/CUL Technical Data				
等级	Use Group	B	C	D
额定电压	Rated Voltage [V]	300	-	300
额定电流	Rated Current [A]	10	-	10
接线范围 Wire Range	单芯线 Solid [AWG]	24~16		
	多芯线 Stranded [AWG]	24~16		
耐电压	Dielectric Voltage-Withstand	1.6KV		

IEC 技术参数 IEC Technical Data				
过电压类别	Overvoltage Category	Ⅲ	Ⅲ	Ⅱ
污染等级	Contamination Class	3	2	2
额定电压	Rated Voltage [V]	250	320	500
额定电流	Rated Current [A]	17.5	17.5	17.5
额定冲击电压	Impulse withstand voltage [KV]	4	4	4
导线截面积 Conductor cross section	硬质导线 Solid[mm²]	0.2~1.5		
	柔性导线 Flexible[mm²]	0.2~1.5		

材料 Material		
绝缘材料	Insulation Material	LCP
阻燃等级	Flame retardant rating	UL94V-0
导体材料	Conductor Material	Copper alloy
导体表面镀层	Plating of conductor surface	Sn plated

一般参数 Other Data		
间距/极数	Pitch/Poles [mm]/[P]	5.0,5.08/2~24
剥线长度	Stripping Length [mm]	7~8
螺丝/扭矩	Screw/Torque(Max)[N.m]	/
工作温度	Operating temperature[℃]	-40~+130
焊锡温度	Soldering temperature	285℃ /10S
引针尺寸	Pin dimensions [mm]	0.8*0.4
PCB板孔径	PCB Hole Diameter [mm]	∅1.2

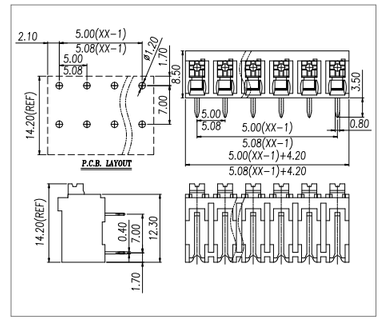

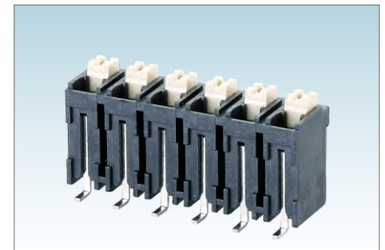

Pitch:5.0/5.08mm

WJ212VS-THR-5.0/5.08

UL/CUL 技术参数 UL/CUL Technical Data				
等级	Use Group	B	C	D
额定电压	Rated Voltage [V]	300	-	300
额定电流	Rated Current [A]	10	-	10
接线范围 Wire Range	单芯线 Solid [AWG]	24~16		
	多芯线 Stranded [AWG]	24~16		
耐电压	Dielectric Voltage-Withstand	1.6KV		

IEC 技术参数 IEC Technical Data				
过电压类别	Overvoltage Category	Ⅲ	Ⅲ	Ⅱ
污染等级	Contamination Class	3	2	2
额定电压	Rated Voltage [V]	250	320	500
额定电流	Rated Current [A]	17.5	17.5	17.5
额定冲击电压	Impulse withstand voltage [KV]	4	4	4
导线截面积 Conductor cross section	硬质导线 Solid[mm²]	0.2~1.5		
	柔性导线 Flexible[mm²]	0.2~1.5		

材料 Material		
绝缘材料	Insulation Material	LCP
阻燃等级	Flame retardant rating	UL94V-0
导体材料	Conductor Material	Copper alloy
导体表面镀层	Plating of conductor surface	Sn plated

一般参数 Other Data		
间距/极数	Pitch/Poles [mm]/[P]	5.0,5.08/2~24
剥线长度	Stripping Length [mm]	7~8
螺丝/扭矩	Screw/Torque(Max)[N.m]	/
工作温度	Operating temperature[℃]	-40~+130
焊锡温度	Soldering temperature	285℃ /10S
引针尺寸	Pin dimensions [mm]	0.8*0.4
PCB板孔径	PCB Hole Diameter [mm]	/

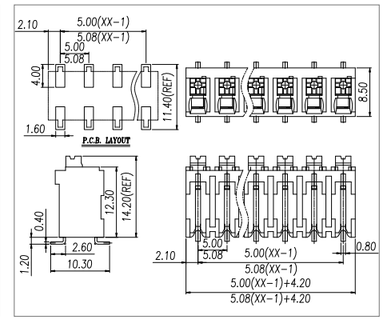

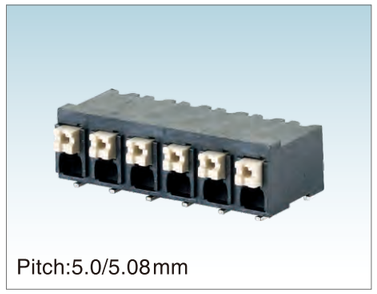

Pitch:5.0/5.08mm

WJ212RS-THR-5.0/5.08

UL/CUL 技术参数 UL/CUL Technical Data				
等级	Use Group	B	C	D
额定电压	Rated Voltage [V]	300	-	300
额定电流	Rated Current [A]	10	-	10
接线范围 Wire Range	单芯线 Solid [AWG]	24~16		
	多芯线 Stranded [AWG]	24~16		
耐电压	Dielectric Voltage-Withstand	1.6KV		

IEC 技术参数 IEC Technical Data				
过电压类别	Overvoltage Category	Ⅲ	Ⅲ	Ⅱ
污染等级	Contamination Class	3	2	2
额定电压	Rated Voltage [V]	250	320	500
额定电流	Rated Current [A]	17.5	17.5	17.5
额定冲击电压	Impulse withstand voltage [KV]	4	4	4
导线截面积 Conductor cross section	硬质导线 Solid[mm²]	0.2~1.5		
	柔性导线 Flexible[mm²]	0.2~1.5		

材料 Material		
绝缘材料	Insulation Material	LCP
阻燃等级	Flame retardant rating	UL94V-0
导体材料	Conductor Material	Copper alloy
导体表面镀层	Plating of conductor surface	Sn plated

一般参数 Other Data		
间距/极数	Pitch/Poles [mm]/[P]	5.0,5.08/2~24
剥线长度	Stripping Length [mm]	7~8
螺丝/扭矩	Screw/Torque(Max)[N.m]	/
工作温度	Operating temperature[℃]	-40~+130
焊锡温度	Soldering temperature	285℃ /10S
引针尺寸	Pin dimensions [mm]	0.8*0.4
PCB板孔径	PCB Hole Diameter [mm]	/

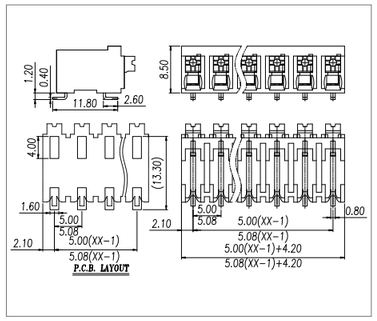

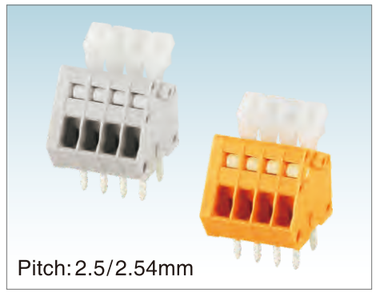

Pitch:2.5/2.54mm

WJ213A-2.5/2.54

UL/CUL 技术参数 UL/CUL Technical Data				
等级	Use Group	B	C	D
额定电压	Rated Voltage [V]	150	-	-
额定电流	Rated Current [A]	4	-	-
接线范围 Wire Range	单芯线 Solid [AWG]	28~20		
	多芯线 Stranded [AWG]	28~20		
耐电压	Dielectric Voltage-Withstand	1.3KV		

IEC 技术参数 IEC Technical Data				
过电压类别	Overvoltage Category	Ⅲ	Ⅲ	Ⅱ
污染等级	Contamination Class	3	2	2
额定电压	Rated Voltage [V]	63	160	320
额定电流	Rated Current [A]	6	6	6
额定冲击电压	Impulse withstand voltage [KV]	2.5	2.5	2.5
导线截面积 Conductor cross section	硬质导线 Solid[mm²]	0.2~0.5		
	柔性导线 Flexible[mm²]	0.2~0.5		

材料 Material		
绝缘材料	Insulation Material	PA66
阻燃等级	Flame retardant rating	UL94V-0
导体材料	Conductor Material	Copper alloy
导体表面镀层	Plating of conductor surface	Sn plated

一般参数 Other Data		
间距/极数	Pitch/Poles [mm]/[P]	2.5,2.54/1~30
剥线长度	Stripping Length [mm]	5~6
螺丝/扭矩	Screw/Torque(Max)[N.m]	/
工作温度	Operating temperature[℃]	-40~+105
焊锡温度	Soldering temperature	260℃/5S
引针尺寸	Pin dimensions [mm]	0.75*0.5
PCB板孔径	PCB Hole Diameter [mm]	∅1.2

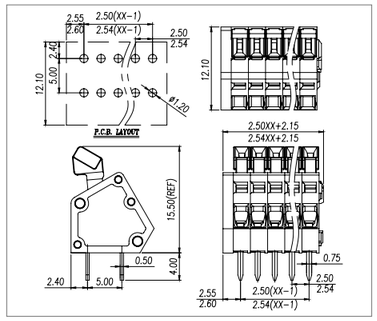

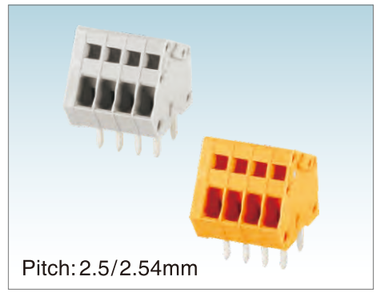

Pitch:2.5/2.54mm

WJ213B-2.5/2.54

UL/CUL 技术参数 UL/CUL Technical Data				
等级	Use Group	B	C	D
额定电压	Rated Voltage [V]	150	-	-
额定电流	Rated Current [A]	4	-	-
接线范围 Wire Range	单芯线 Solid [AWG]	28~20		
	多芯线 Stranded [AWG]	28~20		
耐电压	Dielectric Voltage-Withstand	1.3KV		

IEC 技术参数 IEC Technical Data				
过电压类别	Overvoltage Category	Ⅲ	Ⅲ	Ⅱ
污染等级	Contamination Class	3	2	2
额定电压	Rated Voltage [V]	63	160	320
额定电流	Rated Current [A]	6	6	6
额定冲击电压	Impulse withstand voltage [KV]	2.5	2.5	2.5
导线截面积 Conductor cross section	硬质导线 Solid[mm²]	0.2~0.5		
	柔性导线 Flexible[mm²]	0.2~0.5		

材料 Material		
绝缘材料	Insulation Material	PA66
阻燃等级	Flame retardant rating	UL94V-0
导体材料	Conductor Material	Copper alloy
导体表面镀层	Plating of conductor surface	Sn plated

一般参数 Other Data		
间距/极数	Pitch/Poles [mm]/[P]	2.5,2.54/1~30
剥线长度	Stripping Length [mm]	5~6
螺丝/扭矩	Screw/Torque(Max)[N.m]	/
工作温度	Operating temperature[℃]	-40~+105
焊锡温度	Soldering temperature	260℃/5S
引针尺寸	Pin dimensions [mm]	0.75*0.5
PCB板孔径	PCB Hole Diameter [mm]	∅1.2

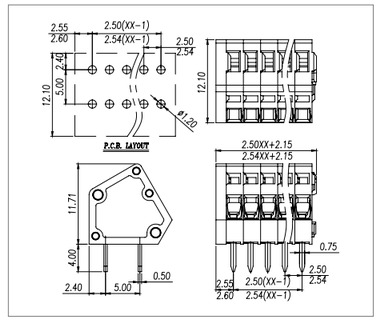



Pitch:3.81mm

WJ235A-3.81

UL/CUL 技术参数 UL/CUL Technical Data				
等级	Use Group	B	C	D
额定电压	Rated Voltage [V]	300	-	300
额定电流	Rated Current [A]	5	-	5
接线范围 Wire Range	单芯线 Solid [AWG]	22~18		
	多芯线 Stranded [AWG]	22~18		
耐电压	Dielectric Voltage-Withstand	1.6KV		

IEC 技术参数 IEC Technical Data				
过电压类别	Overvoltage Category	Ⅲ	Ⅲ	Ⅱ
污染等级	Contamination Class	3	2	2
额定电压	Rated Voltage [V]	200	320	500
额定电流	Rated Current [A]	17.5	17.5	17.5
额定冲击电压	Impulse withstand voltage [KV]	4	4	4
导线截面积 Conductor cross section	硬质导线 Solid[mm²]	0.5~1.5		
	柔性导线 Flexible[mm²]	0.75~1.5		

材料 Material		
绝缘材料	Insulation Material	PA66
阻燃等级	Flame retardant rating	UL94V-0
导体材料	Conductor Material	Copper alloy
导体表面镀层	Plating of conductor surface	Sn plated

一般参数 Other Data		
间距/极数	Pitch/Poles [mm]/[P]	3.81/1~30
剥线长度	Stripping Length [mm]	9~10
螺丝/扭矩	Screw/Torque(Max)[N.m]	/
工作温度	Operating temperature[℃]	-40~+105
焊锡温度	Soldering temperature	260℃/5S
引针尺寸	Pin dimensions [mm]	0.8*0.4
PCB板孔径	PCB Hole Diameter [mm]	∅1.2

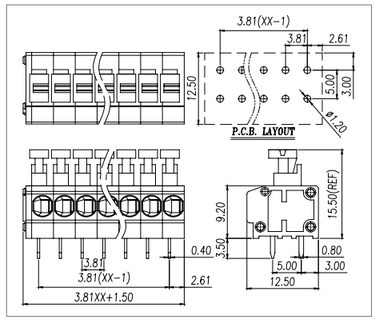

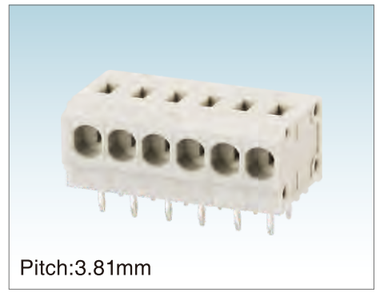

Pitch:3.81mm

WJ235B-3.81

UL/CUL 技术参数 UL/CUL Technical Data				
等级	Use Group	B	C	D
额定电压	Rated Voltage [V]	300	-	300
额定电流	Rated Current [A]	5	-	5
接线范围 Wire Range	单芯线 Solid [AWG]	22~18		
	多芯线 Stranded [AWG]	22~18		
耐电压	Dielectric Voltage-Withstand	1.6KV		

IEC 技术参数 IEC Technical Data				
过电压类别	Overvoltage Category	Ⅲ	Ⅲ	Ⅱ
污染等级	Contamination Class	3	2	2
额定电压	Rated Voltage [V]	200	320	500
额定电流	Rated Current [A]	17.5	17.5	17.5
额定冲击电压	Impulse withstand voltage [KV]	4	4	4
导线截面积 Conductor cross section	硬质导线 Solid[mm²]	0.5~1.5		
	柔性导线 Flexible[mm²]	0.75~1.5		

材料 Material		
绝缘材料	Insulation Material	PA66
阻燃等级	Flame retardant rating	UL94V-0
导体材料	Conductor Material	Copper alloy
导体表面镀层	Plating of conductor surface	Sn plated

一般参数 Other Data		
间距/极数	Pitch/Poles [mm]/[P]	3.81/1~30
剥线长度	Stripping Length [mm]	9~10
螺丝/扭矩	Screw/Torque(Max)[N.m]	/
工作温度	Operating temperature[℃]	-40~+105
焊锡温度	Soldering temperature	260℃/5S
引针尺寸	Pin dimensions [mm]	0.8*0.4
PCB板孔径	PCB Hole Diameter [mm]	∅1.2

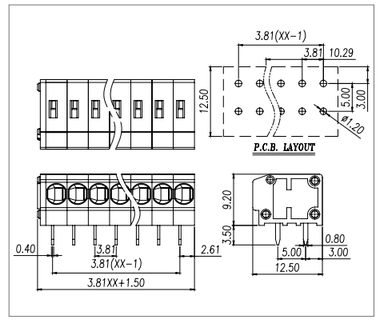

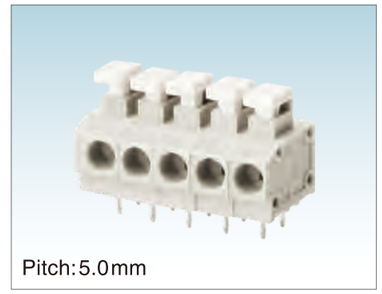

Pitch:5.0mm

WJ235A-5.0

UL/CUL 技术参数 UL/CUL Technical Data				
等级	Use Group	B	C	D
额定电压	Rated Voltage [V]	300	-	300
额定电流	Rated Current [A]	5	-	5
接线范围 Wire Range	单芯线 Solid [AWG]	22~18		
	多芯线 Stranded [AWG]	22~18		
耐电压	Dielectric Voltage-Withstand	1.6KV		

IEC 技术参数 IEC Technical Data				
过电压类别	Overvoltage Category	Ⅲ	Ⅲ	Ⅱ
污染等级	Contamination Class	3	2	2
额定电压	Rated Voltage [V]	250	320	630
额定电流	Rated Current [A]	17.5	17.5	17.5
额定冲击电压	Impulse withstand voltage [KV]	4	4	4
导线截面积 Conductor cross section	硬质导线 Solid[mm²]	0.5~1.5		
	柔性导线 Flexible[mm²]	0.75~1.5		

材料 Material		
绝缘材料	Insulation Material	PA66
阻燃等级	Flame retardant rating	UL94V-0
导体材料	Conductor Material	Copper alloy
导体表面镀层	Plating of conductor surface	Sn plated

一般参数 Other Data		
间距/极数	Pitch/Poles [mm]/[P]	5.0/1~30
剥线长度	Stripping Length [mm]	9~10
螺丝/扭矩	Screw/Torque(Max)[N.m]	/
工作温度	Operating temperature[℃]	-40~+105
焊锡温度	Soldering temperature	260℃/5S
引针尺寸	Pin dimensions [mm]	0.8*0.4
PCB板孔径	PCB Hole Diameter [mm]	∅1.2

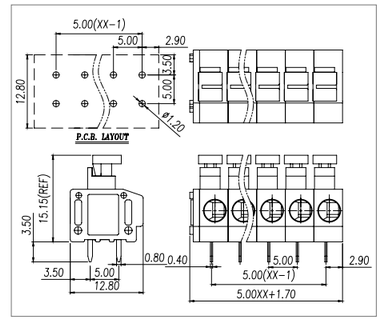

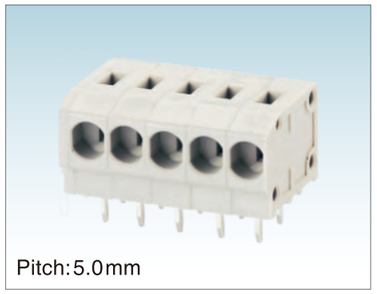

Pitch:5.0mm

WJ235B-5.0

UL/CUL 技术参数 UL/CUL Technical Data				
等级	Use Group	B	C	D
额定电压	Rated Voltage [V]	300	-	300
额定电流	Rated Current [A]	5	-	5
接线范围 Wire Range	单芯线 Solid [AWG]	22~18		
	多芯线 Stranded [AWG]	22~18		
耐电压	Dielectric Voltage-Withstand	1.6KV		
IEC 技术参数 IEC Technical Data				
过电压类别	Overvoltage Category	Ⅲ	Ⅲ	Ⅱ
污染等级	Contamination Class	3	2	2
额定电压	Rated Voltage [V]	250	320	630
额定电流	Rated Current [A]	17.5	17.5	17.5
额定冲击电压	Impulse withstand voltage [KV]	4	4	4
导线截面积 Conductor cross section	硬质导线 Solid[mm²]	0.5~1.5		
	柔性导线 Flexible[mm²]	0.75~1.5		
材料 Material				
绝缘材料	Insulation Material	PA66		
阻燃等级	Flame retardant rating	UL94V-0		
导体材料	Conductor Material	Copper alloy		
导体表面镀层	Plating of conductor surface	Sn plated		
一般参数 Other Data				
间距/极数	Pitch/Poles [mm]/[P]	5.0/1~30		
剥线长度	Stripping Length [mm]	9~10		
螺丝/扭矩	Screw/Torque(Max)[N.m]	/		
工作温度	Operating temperature[℃]	-40~+105		
焊锡温度	Soldering temperature	260℃/5S		
引针尺寸	Pin dimensions [mm]	0.8*0.4		
PCB板孔径	PCB Hole Diameter [mm]	∅1.2		

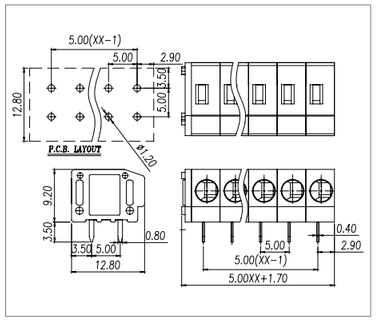



Pitch:3.81mm

WJ236-3.81

UL/CUL 技术参数 UL/CUL Technical Data				
等级	Use Group	B	C	D
额定电压	Rated Voltage [V]	300	-	300
额定电流	Rated Current [A]	10	-	10
接线范围 Wire Range	单芯线 Solid [AWG]	20~16		
	多芯线 Stranded [AWG]	20~16		
耐电压	Dielectric Voltage-Withstand	1.6KV		
IEC 技术参数 IEC Technical Data				
过电压类别	Overvoltage Category	Ⅲ	Ⅲ	Ⅱ
污染等级	Contamination Class	3	2	2
额定电压	Rated Voltage [V]	250	320	630
额定电流	Rated Current [A]	10	10	10
额定冲击电压	Impulse withstand voltage [KV]	4	4	4
导线截面积 Conductor cross section	硬质导线 Solid[mm²]	0.5~1.5		
	柔性导线 Flexible[mm²]	0.5~1.5		
材料 Material				
绝缘材料	Insulation Material	PA66		
阻燃等级	Flame retardant rating	UL94V-0		
导体材料	Conductor Material	Copper alloy		
导体表面镀层	Plating of conductor surface	Sn plated		
一般参数 Other Data				
间距/极数	Pitch/Poles [mm]/[P]	3.81/1~24		
剥线长度	Stripping Length [mm]	8~9		
螺丝/扭矩	Screw/Torque(Max)[N.m]	/		
工作温度	Operating temperature[℃]	-40~+105		
焊锡温度	Soldering temperature	260℃/5S		
引针尺寸	Pin dimensions [mm]	0.8*0.5		
PCB板孔径	PCB Hole Diameter [mm]	∅1.1		

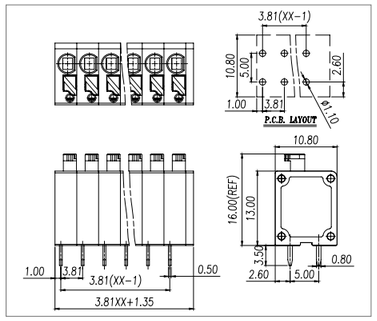

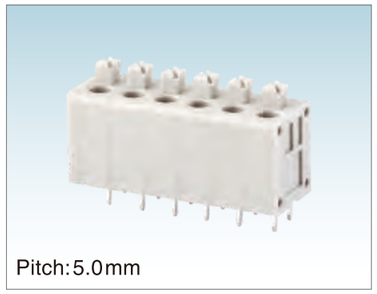

Pitch:5.0mm

WJ236-5.0

UL/CUL 技术参数 UL/CUL Technical Data				
等级	Use Group	B	C	D
额定电压	Rated Voltage [V]	300	-	300
额定电流	Rated Current [A]	10	-	10
接线范围 Wire Range	单芯线 Solid [AWG]	20~16		
	多芯线 Stranded [AWG]	20~16		
耐电压	Dielectric Voltage-Withstand	1.6KV		
IEC 技术参数 IEC Technical Data				
过电压类别	Overvoltage Category	Ⅲ	Ⅲ	Ⅱ
污染等级	Contamination Class	3	2	2
额定电压	Rated Voltage [V]	320	320	630
额定电流	Rated Current [A]	10	10	10
额定冲击电压	Impulse withstand voltage [KV]	4	4	4
导线截面积 Conductor cross section	硬质导线 Solid[mm²]	0.5~1.5		
	柔性导线 Flexible[mm²]	0.5~1.5		
材料 Material				
绝缘材料	Insulation Material	PA66		
阻燃等级	Flame retardant rating	UL94V-0		
导体材料	Conductor Material	Copper alloy		
导体表面镀层	Plating of conductor surface	Sn plated		
一般参数 Other Data				
间距/极数	Pitch/Poles [mm]/[P]	5.0/1~24		
剥线长度	Stripping Length [mm]	8~9		
螺丝/扭矩	Screw/Torque(Max)[N.m]	/		
工作温度	Operating temperature[℃]	-40~+105		
焊锡温度	Soldering temperature	260℃/5S		
引针尺寸	Pin dimensions [mm]	0.8*0.5		
PCB板孔径	PCB Hole Diameter [mm]	∅1.1		

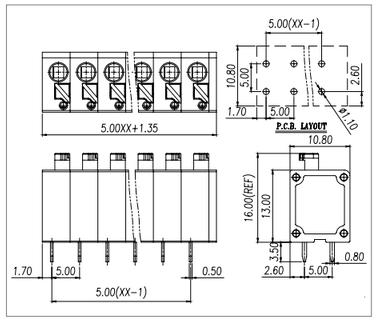



Pitch:7.5mm

WJ236-7.5

UL/CUL 技术参数 UL/CUL Technical Data				
等级	Use Group	B	C	D
额定电压	Rated Voltage [V]	300	-	300
额定电流	Rated Current [A]	10	-	10
接线范围 Wire Range	单芯线 Solid [AWG]	20~16		
	多芯线 Stranded [AWG]	20~16		
耐电压	Dielectric Voltage-Withstand	1.6KV		
IEC 技术参数 IEC Technical Data				
过电压类别	Overvoltage Category	Ⅲ	Ⅲ	Ⅱ
污染等级	Contamination Class	3	2	2
额定电压	Rated Voltage [V]	320	320	630
额定电流	Rated Current [A]	10	10	10
额定冲击电压	Impulse withstand voltage [KV]	4	4	4
导线截面积 Conductor cross section	硬质导线 Solid[mm²]	0.5~1.5		
	柔性导线 Flexible[mm²]	0.5~1.5		
材料 Material				
绝缘材料	Insulation Material	PA66		
阻燃等级	Flame retardant rating	UL94V-0		
导体材料	Conductor Material	Copper alloy		
导体表面镀层	Plating of conductor surface	Sn plated		
一般参数 Other Data				
间距/极数	Pitch/Poles [mm]/[P]	7.5/1~24		
剥线长度	Stripping Length [mm]	8~9		
螺丝/扭矩	Screw/Torque(Max)[N.m]	/		
工作温度	Operating temperature[℃]	-40~+105		
焊锡温度	Soldering temperature	260℃/5S		
引针尺寸	Pin dimensions [mm]	0.8*0.5		
PCB板孔径	PCB Hole Diameter [mm]	∅1.1		

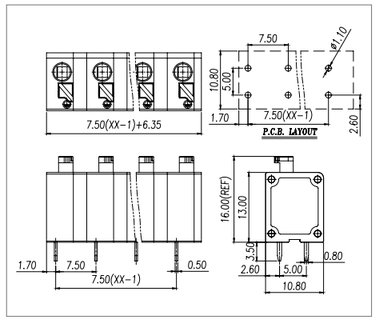

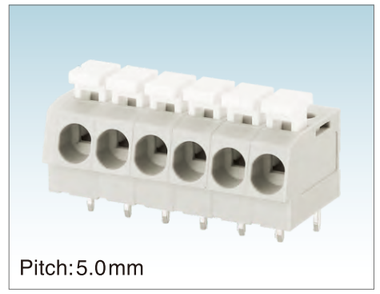

Pitch:5.0mm

WJ237-5.0

UL/CUL 技术参数 UL/CUL Technical Data				
等级	Use Group	B	C	D
额定电压	Rated Voltage [V]	300	-	300
额定电流	Rated Current [A]	12	-	10
接线范围 Wire Range	单芯线 Solid [AWG]	20~12		
	多芯线 Stranded [AWG]	20~12		
耐电压	Dielectric Voltage-Withstand	1.6KV		
IEC 技术参数 IEC Technical Data				
过电压类别	Overvoltage Category	Ⅲ	Ⅲ	Ⅱ
污染等级	Contamination Class	3	2	2
额定电压	Rated Voltage [V]	250	320	630
额定电流	Rated Current [A]	24	24	24
额定冲击电压	Impulse withstand voltage [KV]	4	4	4
导线截面积 Conductor cross section	硬质导线 Solid[mm²]	0.25~2.5		
	柔性导线 Flexible[mm²]	0.25~2.5		
材料 Material				
绝缘材料	Insulation Material	PA66		
阻燃等级	Flame retardant rating	UL94V-0		
导体材料	Conductor Material	Copper alloy		
导体表面镀层	Plating of conductor surface	Sn plated		
一般参数 Other Data				
间距/极数	Pitch/Poles [mm]/[P]	5.0/1~30		
剥线长度	Stripping Length [mm]	10~11		
螺丝/扭矩	Screw/Torque(Max)[N.m]	/		
工作温度	Operating temperature[℃]	-40~+105		
焊锡温度	Soldering temperature	260℃/5S		
引针尺寸	Pin dimensions [mm]	0.8*0.6		
PCB板孔径	PCB Hole Diameter [mm]	∅1.3		

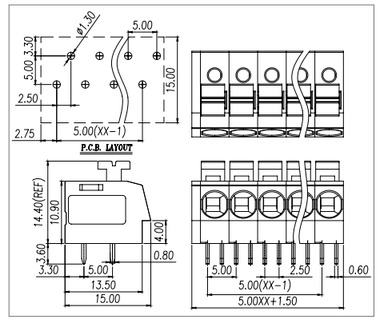



Pitch: 7.5/10.0mm

WJ237-7.5/10.0

UL/CUL 技术参数 UL/CUL Technical Data				
等级	Use Group	B	C	D
额定电压	Rated Voltage [V]	300	-	300
额定电流	Rated Current [A]	12	-	10
接线范围 Wire Range	单芯线 Solid [AWG]	20~12		
	多芯线 Stranded [AWG]	20~12		
耐电压	Dielectric Voltage-Withstand	1.6KV		
IEC 技术参数 IEC Technical Data				
过电压类别	Overvoltage Category	Ⅲ	Ⅲ	Ⅱ
污染等级	Contamination Class	3	2	2
额定电压	Rated Voltage [V]	320	320	630
额定电流	Rated Current [A]	24	24	24
额定冲击电压	Impulse withstand voltage [KV]	4	4	4
导线截面积 Conductor cross section	硬质导线 Solid[mm²]	0.25~2.5		
	柔性导线 Flexible[mm²]	0.25~2.5		
材料 Material				
绝缘材料	Insulation Material	PA66		
阻燃等级	Flame retardant rating	UL94V-0		
导体材料	Conductor Material	Copper alloy		
导体表面镀层	Plating of conductor surface	Sn plated		
一般参数 Other Data				
间距/极数	Pitch/Poles [mm]/[P]	7.5,10.0/2~18		
剥线长度	Stripping Length [mm]	10~11		
螺丝/扭矩	Screw/Torque(Max)[N.m]	/		
工作温度	Operating temperature[℃]	-40~+105		
焊锡温度	Soldering temperature	260℃/5S		
引针尺寸	Pin dimensions [mm]	0.8*0.6		
PCB板孔径	PCB Hole Diameter [mm]	∅1.3		

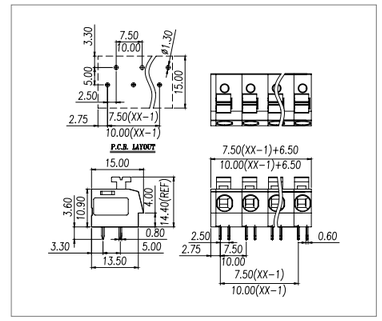

ISO14001 ISO45001 ISO9001 ISO80079-34 ISO/TS 22163



Pitch:5.08mm

WJ238-5.08

UL/CUL 技术参数 UL/CUL Technical Data				
等级	Use Group	B	C	D
额定电压	Rated Voltage [V]	300	-	300
额定电流	Rated Current [A]	10	-	10
接线范围 Wire Range	单芯线 Solid [AWG]	22~16		
	多芯线 Stranded [AWG]	22~16		
耐电压	Dielectric Voltage-Withstand	1.6KV		
IEC 技术参数 IEC Technical Data				
过电压类别	Overvoltage Category	Ⅲ	Ⅲ	Ⅱ
污染等级	Contamination Class	3	2	2
额定电压	Rated Voltage [V]	250	320	630
额定电流	Rated Current [A]	12	12	12
额定冲击电压	Impulse withstand voltage [KV]	4	4	4
导线截面积 Conductor cross section	硬质导线 Solid[mm²]	0.2~1.5		
	柔性导线 Flexible[mm²]	0.2~1.5		
材料 Material				
绝缘材料	Insulation Material	PA66		
阻燃等级	Flame retardant rating	UL94V-0		
导体材料	Conductor Material	Copper alloy		
导体表面镀层	Plating of conductor surface	Sn plated		
一般参数 Other Data				
间距/极数	Pitch/Poles [mm]/[P]	5.08/2~12		
剥线长度	Stripping Length [mm]	10		
螺丝/扭矩	Screw/Torque(Max)[N.m]	/		
工作温度	Operating temperature[℃]	-40~+105		
焊锡温度	Soldering temperature	260℃/5S		
引针尺寸	Pin dimensions [mm]	0.9*0.5		
PCB板孔径	PCB Hole Diameter [mm]	∅1.2		

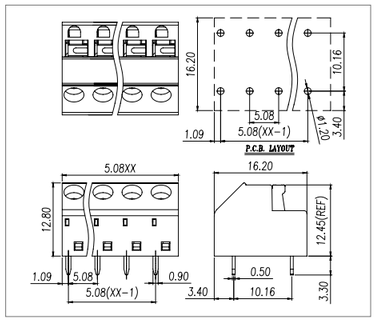



Pitch:7.5mm

WJ239R-7.5

UL/CUL 技术参数 UL/CUL Technical Data				
等级	Use Group	B	C	D
额定电压	Rated Voltage [V]	600	600	600
额定电流	Rated Current [A]	40	40	5
接线范围 Wire Range	单芯线 Solid [AWG]	24~8		
	多芯线 Stranded [AWG]	24~8		
耐电压	Dielectric Voltage-Withstand	2.2KV		
IEC 技术参数 IEC Technical Data				
过电压类别	Overvoltage Category	Ⅲ	Ⅲ	Ⅱ
污染等级	Contamination Class	3	2	2
额定电压	Rated Voltage [V]	800	1000	1000
额定电流	Rated Current [A]	41	41	41
额定冲击电压	Impulse withstand voltage [KV]	8	8	6
导线截面积 Conductor cross section	硬质导线 Solid[mm²]	0.2~10		
	柔性导线 Flexible[mm²]	0.2~6		
材料 Material				
绝缘材料	Insulation Material	PA66		
阻燃等级	Flame retardant rating	UL94V-0		
导体材料	Conductor Material	Copper alloy		
导体表面镀层	Plating of conductor surface	Sn plated		
一般参数 Other Data				
间距/极数	Pitch/Poles [mm]/[P]	7.5/2~18		
剥线长度	Stripping Length [mm]	15		
螺丝/扭矩	Screw/Torque(Max)[N.m]	/		
工作温度	Operating temperature[℃]	-40~+105		
焊锡温度	Soldering temperature	260℃/5S		
引针尺寸	Pin dimensions [mm]	1.7*0.8		
PCB板孔径	PCB Hole Diameter [mm]	∅2.1		

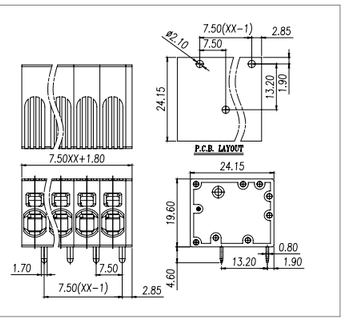

Pitch:7.5mm

WJ239V-7.5

UL/CUL 技术参数 UL/CUL Technical Data				
等级	Use Group	B	C	D
额定电压	Rated Voltage [V]	600	600	600
额定电流	Rated Current [A]	40	40	5
接线范围 Wire Range	单芯线 Solid [AWG]	24~8		
	多芯线 Stranded [AWG]	24~8		
耐电压	Dielectric Voltage-Withstand	2.2KV		
IEC 技术参数 IEC Technical Data				
过电压类别	Overvoltage Category	Ⅲ	Ⅲ	Ⅱ
污染等级	Contamination Class	3	2	2
额定电压	Rated Voltage [V]	800	1000	1000
额定电流	Rated Current [A]	41	41	41
额定冲击电压	Impulse withstand voltage [KV]	8	8	6
导线截面积 Conductor cross section	硬质导线 Solid[mm²]	0.2~10		
	柔性导线 Flexible[mm²]	0.2~6		
材料 Material				
绝缘材料	Insulation Material	PA66		
阻燃等级	Flame retardant rating	UL94V-0		
导体材料	Conductor Material	Copper alloy		
导体表面镀层	Plating of conductor surface	Sn plated		
一般参数 Other Data				
间距/极数	Pitch/Poles [mm]/[P]	7.5/2~18		
剥线长度	Stripping Length [mm]	15		
螺丝/扭矩	Screw/Torque(Max)[N.m]	/		
工作温度	Operating temperature[℃]	-40~+105		
焊锡温度	Soldering temperature	260℃/5S		
引针尺寸	Pin dimensions [mm]	1.7*0.8		
PCB板孔径	PCB Hole Diameter [mm]	∅2.1		

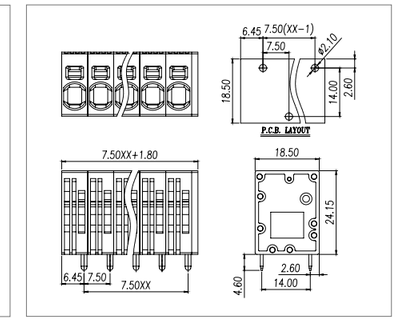



Pitch:10.0mm

WJ239R-10.0

UL/CUL 技术参数 UL/CUL Technical Data				
等级	Use Group	B	C	D
额定电压	Rated Voltage [V]	600	600	600
额定电流	Rated Current [A]	66	66	5
接线范围 Wire Range	单芯线 Solid [AWG]	18~4		
	多芯线 Stranded [AWG]	18~4		
耐电压	Dielectric Voltage-Withstand	2.2KV		
IEC 技术参数 IEC Technical Data				
过电压类别	Overvoltage Category	Ⅲ	Ⅲ	Ⅱ
污染等级	Contamination Class	3	2	2
额定电压	Rated Voltage [V]	1000	1000	1000
额定电流	Rated Current [A]	76	76	76
额定冲击电压	Impulse withstand voltage [KV]	8	8	6
导线截面积 Conductor cross section	硬质导线 Solid[mm²]	0.75~16		
	柔性导线 Flexible[mm²]	0.75~16		
材料 Material				
绝缘材料	Insulation Material	PA66		
阻燃等级	Flame retardant rating	UL94V-0		
导体材料	Conductor Material	Copper alloy		
导体表面镀层	Plating of conductor surface	Sn plated		
一般参数 Other Data				
间距/极数	Pitch/Poles [mm]/[P]	10.0/2~12		
剥线长度	Stripping Length [mm]	18		
螺丝/扭矩	Screw/Torque(Max)[N.m]	/		
工作温度	Operating temperature[℃]	-40~+105		
焊锡温度	Soldering temperature	260℃/5S		
引针尺寸	Pin dimensions [mm]	1.2*1.0		
PCB板孔径	PCB Hole Diameter [mm]	∅1.8		

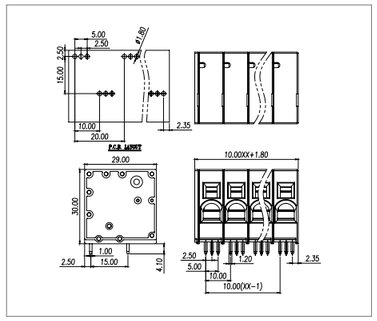



Pitch:10.0mm

WJ239V-10.0

UL/CUL 技术参数 UL/CUL Technical Data				
等级	Use Group	B	C	D
额定电压	Rated Voltage [V]	600	600	600
额定电流	Rated Current [A]	66	66	5
接线范围 Wire Range	单芯线 Solid [AWG]	18~4		
	多芯线 Stranded [AWG]	18~4		
耐电压	Dielectric Voltage-Withstand	2.2KV		
IEC 技术参数 IEC Technical Data				
过电压类别	Overvoltage Category	Ⅲ	Ⅲ	Ⅱ
污染等级	Contamination Class	3	2	2
额定电压	Rated Voltage [V]	1000	1000	1000
额定电流	Rated Current [A]	76	76	76
额定冲击电压	Impulse withstand voltage [KV]	8	8	6
导线截面积 Conductor cross section	硬质导线 Solid[mm²]	0.75~16		
	柔性导线 Flexible[mm²]	0.75~16		
材料 Material				
绝缘材料	Insulation Material	PA66		
阻燃等级	Flame retardant rating	UL94V-0		
导体材料	Conductor Material	Copper alloy		
导体表面镀层	Plating of conductor surface	Sn plated		
一般参数 Other Data				
间距/极数	Pitch/Poles [mm]/[P]	10.0/2~12		
剥线长度	Stripping Length [mm]	18		
螺丝/扭矩	Screw/Torque(Max)[N.m]	/		
工作温度	Operating temperature[℃]	-40~+105		
焊锡温度	Soldering temperature	260℃/5S		
引针尺寸	Pin dimensions [mm]	1.2*1.0		
PCB板孔径	PCB Hole Diameter [mm]	∅1.8		

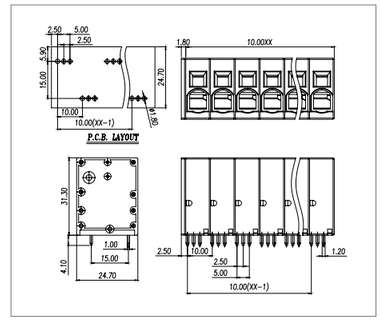

ISO14001 ISO45001 ISO9001 ISO80079-34 ISO/TS 22163



Pitch:3.5 mm

WJ241V-3.5

UL/CUL 技术参数 UL/CUL Technical Data				
等级	Use Group	B	C	D
额定电压	Rated Voltage [V]	300	-	300
额定电流	Rated Current [A]	10	-	10
接线范围 Wire Range	单芯线 Solid [AWG]	24~16		
	多芯线 Stranded [AWG]	24~16		
耐电压	Dielectric Voltage-Withstand	1.6KV		
IEC 技术参数 IEC Technical Data				
过电压类别	Overvoltage Category	Ⅲ	Ⅲ	Ⅱ
污染等级	Contamination Class	3	2	2
额定电压	Rated Voltage [V]	160	200	400
额定电流	Rated Current [A]	17.5	17.5	17.5
额定冲击电压	Impulse withstand voltage [KV]	2.5	2.5	2.5
导线截面积 Conductor cross section	硬质导线 Solid[mm²]	0.2~1.5		
	柔性导线 Flexible[mm²]	0.2~1.5		
材料 Material				
绝缘材料	Insulation Material	PA66		
阻燃等级	Flame retardant rating	UL94V-0		
导体材料	Conductor Material	Copper alloy		
导体表面镀层	Plating of conductor surface	Sn plated		
一般参数 Other Data				
间距/极数	Pitch/Poles [mm]/[P]	3.5/1~30		
剥线长度	Stripping Length [mm]	11~12		
螺丝/扭矩	Screw/Torque(Max)[N.m]	/		
工作温度	Operating temperature[℃]	-40~+105		
焊锡温度	Soldering temperature	260℃/5S		
引针尺寸	Pin dimensions [mm]	0.8*0.8		
PCB板孔径	PCB Hole Diameter [mm]	∅1.3		

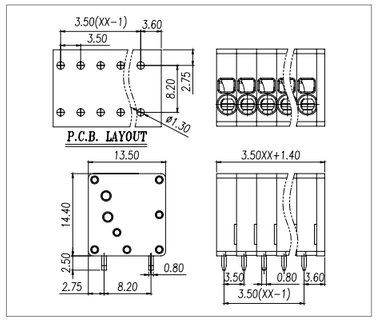



Pitch:3.5 mm

WJ241R-3.5

UL/CUL 技术参数 UL/CUL Technical Data				
等级	Use Group	B	C	D
额定电压	Rated Voltage [V]	300	-	300
额定电流	Rated Current [A]	10	-	10
接线范围 Wire Range	单芯线 Solid [AWG]	24~16		
	多芯线 Stranded [AWG]	24~16		
耐电压	Dielectric Voltage-Withstand	1.6KV		
IEC 技术参数 IEC Technical Data				
过电压类别	Overvoltage Category	Ⅲ	Ⅲ	Ⅱ
污染等级	Contamination Class	3	2	2
额定电压	Rated Voltage [V]	160	200	400
额定电流	Rated Current [A]	17.5	17.5	17.5
额定冲击电压	Impulse withstand voltage [KV]	2.5	2.5	2.5
导线截面积 Conductor cross section	硬质导线 Solid[mm²]	0.2~1.5		
	柔性导线 Flexible[mm²]	0.2~1.5		
材料 Material				
绝缘材料	Insulation Material	PA66		
阻燃等级	Flame retardant rating	UL94V-0		
导体材料	Conductor Material	Copper alloy		
导体表面镀层	Plating of conductor surface	Sn plated		
一般参数 Other Data				
间距/极数	Pitch/Poles [mm]/[P]	3.5/1~30		
剥线长度	Stripping Length [mm]	11~12		
螺丝/扭矩	Screw/Torque(Max)[N.m]	/		
工作温度	Operating temperature[℃]	-40~+105		
焊锡温度	Soldering temperature	260℃/5S		
引针尺寸	Pin dimensions [mm]	0.8*0.8		
PCB板孔径	PCB Hole Diameter [mm]	∅1.3		

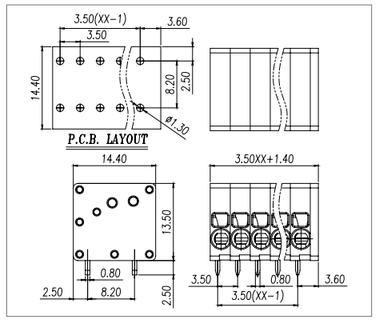



Pitch:5.0mm

WJ241V-5.0

UL/CUL 技术参数 UL/CUL Technical Data				
等级	Use Group	B	C	D
额定电压	Rated Voltage [V]	300	-	300
额定电流	Rated Current [A]	20	-	10
接线范围 Wire Range	单芯线 Solid [AWG]	24~12		
	多芯线 Stranded [AWG]	24~12		
耐电压	Dielectric Voltage-Withstand	1.6KV		
IEC 技术参数 IEC Technical Data				
过电压类别	Overvoltage Category	Ⅲ	Ⅲ	Ⅱ
污染等级	Contamination Class	3	2	2
额定电压	Rated Voltage [V]	250	400	630
额定电流	Rated Current [A]	24	24	24
额定冲击电压	Impulse withstand voltage [KV]	4	4	4
导线截面积 Conductor cross section	硬质导线 Solid[mm²]	0.2~4.0		
	柔性导线 Flexible[mm²]	0.2~2.5		
材料 Material				
绝缘材料	Insulation Material	PA66		
阻燃等级	Flame retardant rating	UL94V-0		
导体材料	Conductor Material	Copper alloy		
导体表面镀层	Plating of conductor surface	Sn plated		
一般参数 Other Data				
间距/极数	Pitch/Poles [mm]/[P]	5.0/1~30		
剥线长度	Stripping Length [mm]	9~10		
螺丝/扭矩	Screw/Torque(Max)[N.m]	/		
工作温度	Operating temperature[℃]	-40~+105		
焊锡温度	Soldering temperature	260℃/5S		
引针尺寸	Pin dimensions [mm]	0.8*0.8		
PCB板孔径	PCB Hole Diameter [mm]	∅1.3		

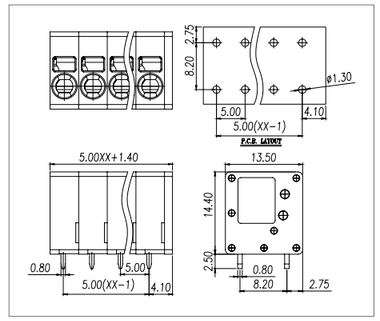



Pitch:5.0mm

WJ241R-5.0

UL/CUL 技术参数 UL/CUL Technical Data				
等级	Use Group	B	C	D
额定电压	Rated Voltage [V]	300	-	300
额定电流	Rated Current [A]	20	-	10
接线范围 Wire Range	单芯线 Solid [AWG]	24~12		
	多芯线 Stranded [AWG]	24~12		
耐电压	Dielectric Voltage-Withstand	1.6KV		
IEC 技术参数 IEC Technical Data				
过电压类别	Overvoltage Category	Ⅲ	Ⅲ	Ⅱ
污染等级	Contamination Class	3	2	2
额定电压	Rated Voltage [V]	250	400	630
额定电流	Rated Current [A]	24	24	24
额定冲击电压	Impulse withstand voltage [KV]	4	4	4
导线截面积 Conductor cross section	硬质导线 Solid[mm²]	0.2~4.0		
	柔性导线 Flexible[mm²]	0.2~2.5		
材料 Material				
绝缘材料	Insulation Material	PA66		
阻燃等级	Flame retardant rating	UL94V-0		
导体材料	Conductor Material	Copper alloy		
导体表面镀层	Plating of conductor surface	Sn plated		
一般参数 Other Data				
间距/极数	Pitch/Poles [mm]/[P]	5.0/1~30		
剥线长度	Stripping Length [mm]	9~10		
螺丝/扭矩	Screw/Torque(Max)[N.m]	/		
工作温度	Operating temperature[℃]	-40~+105		
焊锡温度	Soldering temperature	260℃/5S		
引针尺寸	Pin dimensions [mm]	0.8*0.8		
PCB板孔径	PCB Hole Diameter [mm]	∅1.3		

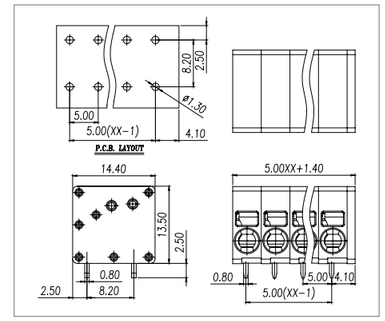



Pitch:5.0mm

WJ242-5.0

UL/CUL 技术参数 UL/CUL Technical Data				
等级	Use Group	B	C	D
额定电压	Rated Voltage [V]	300	-	300
额定电流	Rated Current [A]	20	-	10
接线范围 Wire Range	单芯线 Solid [AWG]	28~12		
	多芯线 Stranded [AWG]	28~12		
耐电压	Dielectric Voltage-Withstand	1.6KV		

IEC 技术参数 IEC Technical Data				
过电压类别	Overvoltage Category	Ⅲ	Ⅲ	Ⅱ
污染等级	Contamination Class	3	2	2
额定电压	Rated Voltage [V]	320	320	630
额定电流	Rated Current [A]	32	32	32
额定冲击电压	Impulse withstand voltage [KV]	4	4	4
导线截面积 Conductor cross section	硬质导线 Solid[mm²]	0.2~4.0		
	柔性导线 Flexible[mm²]	0.2~4.0		

材料 Material		
绝缘材料	Insulation Material	PA66
阻燃等级	Flame retardant rating	UL94V-0
导体材料	Conductor Material	Copper alloy
导体表面镀层	Plating of conductor surface	Sn plated

一般参数 Other Data		
间距/极数	Pitch/Poles [mm]/[P]	5.0/1~24
剥线长度	Stripping Length [mm]	9~10
螺丝/扭矩	Screw/Torque(Max)[N.m]	/
工作温度	Operating temperature[℃]	-40~+105
焊锡温度	Soldering temperature	260℃/5S
引针尺寸	Pin dimensions [mm]	1.2*0.8
PCB板孔径	PCB Hole Diameter [mm]	∅1.8

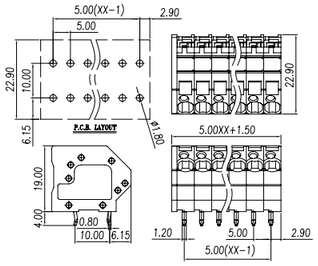



Pitch:7.5mm

WJ242-7.5

UL/CUL 技术参数 UL/CUL Technical Data				
等级	Use Group	B	C	D
额定电压	Rated Voltage [V]	300	150	300
额定电流	Rated Current [A]	20	20	10
接线范围 Wire Range	单芯线 Solid [AWG]	28~12		
	多芯线 Stranded [AWG]	28~12		
耐电压	Dielectric Voltage-Withstand	1.6KV		

IEC 技术参数 IEC Technical Data				
过电压类别	Overvoltage Category	Ⅲ	Ⅲ	Ⅱ
污染等级	Contamination Class	3	2	2
额定电压	Rated Voltage [V]	500	630	1000
额定电流	Rated Current [A]	32	32	32
额定冲击电压	Impulse withstand voltage [KV]	6	6	6
导线截面积 Conductor cross section	硬质导线 Solid[mm²]	0.2~4.0		
	柔性导线 Flexible[mm²]	0.2~4.0		

材料 Material		
绝缘材料	Insulation Material	PA66
阻燃等级	Flame retardant rating	UL94V-0
导体材料	Conductor Material	Copper alloy
导体表面镀层	Plating of conductor surface	Sn plated

一般参数 Other Data		
间距/极数	Pitch/Poles [mm]/[P]	7.5/2~24
剥线长度	Stripping Length [mm]	9~10
螺丝/扭矩	Screw/Torque(Max)[N.m]	/
工作温度	Operating temperature[℃]	-40~+105
焊锡温度	Soldering temperature	260℃/5S
引针尺寸	Pin dimensions [mm]	1.2*0.8
PCB板孔径	PCB Hole Diameter [mm]	∅1.8

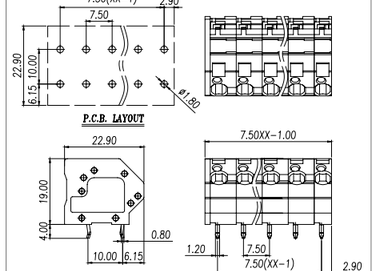

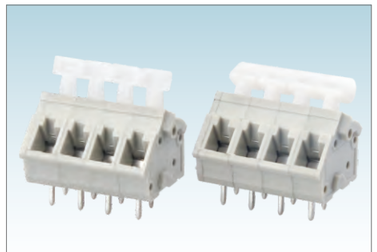

Pitch:5.0mm

WJ243A-5.0

UL/CUL 技术参数 UL/CUL Technical Data				
等级	Use Group	B	C	D
额定电压	Rated Voltage [V]	300	-	300
额定电流	Rated Current [A]	15	-	10
接线范围 Wire Range	单芯线 Solid [AWG]	28~12		
	多芯线 Stranded [AWG]	28~12		
耐电压	Dielectric Voltage-Withstand	1.6KV		

IEC 技术参数 IEC Technical Data				
过电压类别	Overvoltage Category	Ⅲ	Ⅲ	Ⅱ
污染等级	Contamination Class	3	2	2
额定电压	Rated Voltage [V]	250	320	630
额定电流	Rated Current [A]	24	24	24
额定冲击电压	Impulse withstand voltage [KV]	4	4	4
导线截面积 Conductor cross section	硬质导线 Solid[mm²]	0.2~2.5		
	柔性导线 Flexible[mm²]	0.2~2.5		

材料 Material		
绝缘材料	Insulation Material	PA66
阻燃等级	Flame retardant rating	UL94V-0
导体材料	Conductor Material	Copper alloy
导体表面镀层	Plating of conductor surface	Sn plated

一般参数 Other Data		
间距/极数	Pitch/Poles [mm]/[P]	5.0/2~30
剥线长度	Stripping Length [mm]	5~6
螺丝/扭矩	Screw/Torque(Max)[N.m]	/
工作温度	Operating temperature[℃]	-40~+105
焊锡温度	Soldering temperature	260℃/5S
引针尺寸	Pin dimensions [mm]	0.75*0.7
PCB板孔径	PCB Hole Diameter [mm]	∅1.3

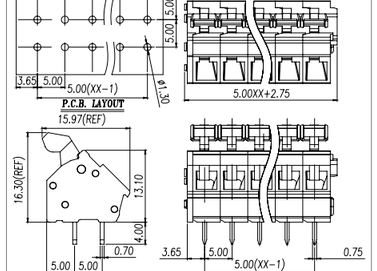



Pitch:5.0/5.08mm

WJ245-5.0/5.08

UL/CUL 技术参数 UL/CUL Technical Data				
等级	Use Group	B	C	D
额定电压	Rated Voltage [V]	300	-	300
额定电流	Rated Current [A]	15	-	10
接线范围 Wire Range	单芯线 Solid [AWG]	28~12		
	多芯线 Stranded [AWG]	28~12		
耐电压	Dielectric Voltage-Withstand	1.6KV		

IEC 技术参数 IEC Technical Data				
过电压类别	Overvoltage Category	Ⅲ	Ⅲ	Ⅱ
污染等级	Contamination Class	3	2	2
额定电压	Rated Voltage [V]	250	320	630
额定电流	Rated Current [A]	24	24	24
额定冲击电压	Impulse withstand voltage [KV]	4	4	4
导线截面积 Conductor cross section	硬质导线 Solid[mm²]	0.2~2.5		
	柔性导线 Flexible[mm²]	0.2~2.5		

材料 Material		
绝缘材料	Insulation Material	PA66
阻燃等级	Flame retardant rating	UL94V-0
导体材料	Conductor Material	Copper alloy
导体表面镀层	Plating of conductor surface	Sn plated

一般参数 Other Data		
间距/极数	Pitch/Poles [mm]/[P]	5.0,5.08/1~30
剥线长度	Stripping Length [mm]	5~6
螺丝/扭矩	Screw/Torque(Max)[N.m]	/
工作温度	Operating temperature[℃]	-40~+105
焊锡温度	Soldering temperature	260℃/5S
引针尺寸	Pin dimensions [mm]	0.75*0.7
PCB板孔径	PCB Hole Diameter [mm]	∅1.3

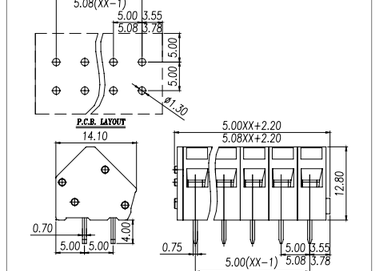

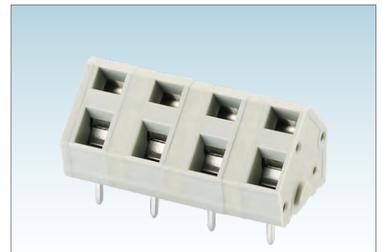

Pitch: 7.5/7.62 mm

WJ245-7.5/7.62

UL/CUL 技术参数 UL/CUL Technical Data				
等级	Use Group	B	C	D
额定电压	Rated Voltage [V]	300	-	300
额定电流	Rated Current [A]	15	-	10
接线范围 Wire Range	单芯线 Solid [AWG]	28~12		
	多芯线 Stranded [AWG]	28~12		
耐电压	Dielectric Voltage-Withstand	1.6KV		

IEC 技术参数 IEC Technical Data				
过电压类别	Overvoltage Category	Ⅲ	Ⅲ	Ⅱ
污染等级	Contamination Class	3	2	2
额定电压	Rated Voltage [V]	400	630	1000
额定电流	Rated Current [A]	24	24	24
额定冲击电压	Impulse withstand voltage [KV]	6	6	6
导线截面积 Conductor cross section	硬质导线 Solid[mm²]	0.2~2.5		
	柔性导线 Flexible[mm²]	0.2~2.5		

材料 Material		
绝缘材料	Insulation Material	PA66
阻燃等级	Flame retardant rating	UL94V-0
导体材料	Conductor Material	Copper alloy
导体表面镀层	Plating of conductor surface	Sn plated

一般参数 Other Data		
间距/极数	Pitch/Poles [mm]/[P]	7.5,7.62/2~30
剥线长度	Stripping Length [mm]	5~6
螺丝/扭矩	Screw/Torque(Max)[N.m]	/
工作温度	Operating temperature[℃]	-40~+105
焊锡温度	Soldering temperature	260℃/5S
引针尺寸	Pin dimensions [mm]	0.75*0.7
PCB板孔径	PCB Hole Diameter [mm]	∅1.3

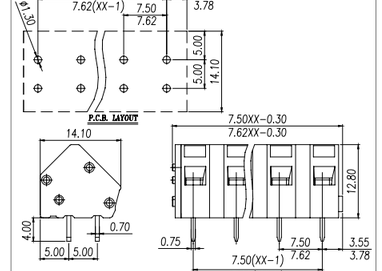

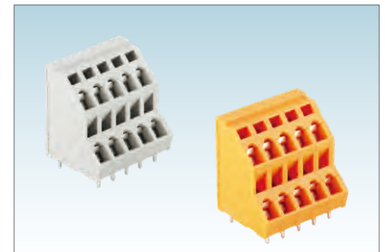

Pitch:5.0/5.08mm

WJ245T2-5.0/5.08

UL/CUL 技术参数 UL/CUL Technical Data				
等级	Use Group	B	C	D
额定电压	Rated Voltage [V]	300	-	300
额定电流	Rated Current [A]	10	-	10
接线范围 Wire Range	单芯线 Solid [AWG]	28~12		
	多芯线 Stranded [AWG]	28~12		
耐电压	Dielectric Voltage-Withstand	1.6KV		

IEC 技术参数 IEC Technical Data				
过电压类别	Overvoltage Category	Ⅲ	Ⅲ	Ⅱ
污染等级	Contamination Class	3	2	2
额定电压	Rated Voltage [V]	250	320	630
额定电流	Rated Current [A]	21	21	21
额定冲击电压	Impulse withstand voltage [KV]	4	4	4
导线截面积 Conductor cross section	硬质导线 Solid[mm²]	0.2~2.5		
	柔性导线 Flexible[mm²]	0.2~2.5		

材料 Material		
绝缘材料	Insulation Material	PA66
阻燃等级	Flame retardant rating	UL94V-0
导体材料	Conductor Material	Copper alloy
导体表面镀层	Plating of conductor surface	Sn plated

一般参数 Other Data		
间距/极数	Pitch/Poles [mm]/[P]	5.0,5.08 2*2~2*24
剥线长度	Stripping Length [mm]	5~6
螺丝/扭矩	Screw/Torque(Max)[N.m]	/
工作温度	Operating temperature[℃]	-40~+105
焊锡温度	Soldering temperature	260℃/5S
引针尺寸	Pin dimensions [mm]	0.7*0.7
PCB板孔径	PCB Hole Diameter [mm]	∅1.3

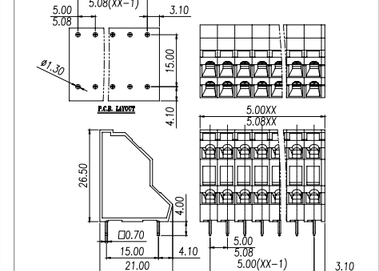

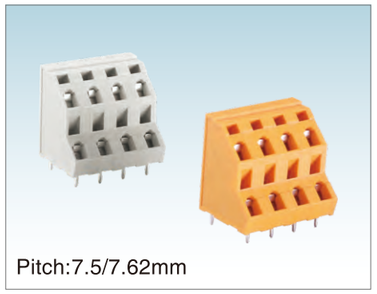

WJ245T2-7.5/7.62

UL/CUL 技术参数 UL/CUL Technical Data				
等级	Use Group	B	C	D
额定电压	Rated Voltage [V]	300	-	300
额定电流	Rated Current [A]	10	-	10
接线范围 Wire Range	单芯线 Solid [AWG]	28~12		
	多芯线 Stranded [AWG]	28~12		
耐电压	Dielectric Voltage-Withstand	1.6KV		

IEC 技术参数 IEC Technical Data				
过电压类别	Overvoltage Category	Ⅲ	Ⅲ	Ⅱ
污染等级	Contamination Class	3	2	2
额定电压	Rated Voltage [V]	400	630	1000
额定电流	Rated Current [A]	21	21	21
额定冲击电压	Impulse withstand voltage [KV]	6	6	6
导线截面积 Conductor cross section	硬质导线 Solid[mm²]	0.2~2.5		
	柔性导线 Flexible[mm²]	0.2~2.5		

材料 Material		
绝缘材料	Insulation Material	PA66
阻燃等级	Flame retardant rating	UL94V-0
导体材料	Conductor Material	Copper alloy
导体表面镀层	Plating of conductor surface	Sn plated

一般参数 Other Data		
间距/极数	Pitch/Poles [mm]/[P]	7.5,7.62 2×2~2×16
剥线长度	Stripping Length [mm]	5~6
螺丝/扭矩	Screw/Torque(Max)[N.m]	/
工作温度	Operating temperature[℃]	-40~+105
焊锡温度	Soldering temperature	260℃/5S
引针尺寸	Pin dimensions [mm]	0.7*0.7
PCB板孔径	PCB Hole Diameter [mm]	∅1.3

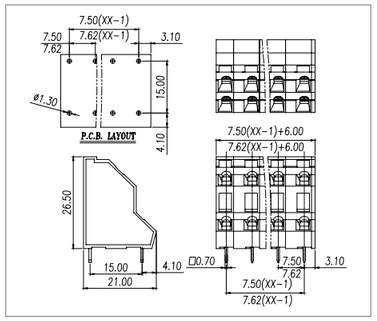

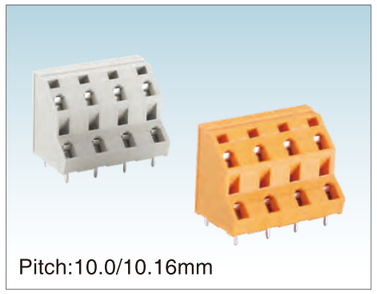

WJ245T2-10.0/10.16

UL/CUL 技术参数 UL/CUL Technical Data				
等级	Use Group	B	C	D
额定电压	Rated Voltage [V]	300	-	300
额定电流	Rated Current [A]	10	-	10
接线范围 Wire Range	单芯线 Solid [AWG]	28~12		
	多芯线 Stranded [AWG]	28~12		
耐电压	Dielectric Voltage-Withstand	1.6KV		

IEC 技术参数 IEC Technical Data				
过电压类别	Overvoltage Category	Ⅲ	Ⅲ	Ⅱ
污染等级	Contamination Class	3	2	2
额定电压	Rated Voltage [V]	630	1000	1000
额定电流	Rated Current [A]	21	21	21
额定冲击电压	Impulse withstand voltage [KV]	8	8	8
导线截面积 Conductor cross section	硬质导线 Solid[mm²]	0.2~2.5		
	柔性导线 Flexible[mm²]	0.2~2.5		

材料 Material		
绝缘材料	Insulation Material	PA66
阻燃等级	Flame retardant rating	UL94V-0
导体材料	Conductor Material	Copper alloy
导体表面镀层	Plating of conductor surface	Sn plated

一般参数 Other Data		
间距/极数	Pitch/Poles [mm]/[P]	10.0,10.16 2×2~2×12
剥线长度	Stripping Length [mm]	5~6
螺丝/扭矩	Screw/Torque(Max)[N.m]	/
工作温度	Operating temperature[℃]	-40~+105
焊锡温度	Soldering temperature	260℃/5S
引针尺寸	Pin dimensions [mm]	0.7*0.7
PCB板孔径	PCB Hole Diameter [mm]	∅1.3

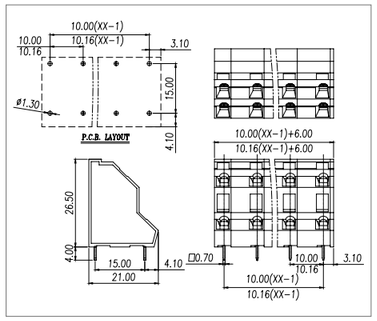

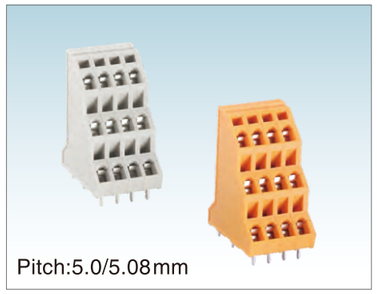

WJ245T3-5.0/5.08

UL/CUL 技术参数 UL/CUL Technical Data				
等级	Use Group	B	C	D
额定电压	Rated Voltage [V]	300	-	300
额定电流	Rated Current [A]	10	-	10
接线范围 Wire Range	单芯线 Solid [AWG]	28~12		
	多芯线 Stranded [AWG]	28~12		
耐电压	Dielectric Voltage-Withstand	1.6KV		

IEC 技术参数 IEC Technical Data				
过电压类别	Overvoltage Category	Ⅲ	Ⅲ	Ⅱ
污染等级	Contamination Class	3	2	2
额定电压	Rated Voltage [V]	250	320	630
额定电流	Rated Current [A]	21	21	21
额定冲击电压	Impulse withstand voltage [KV]	4	4	4
导线截面积 Conductor cross section	硬质导线 Solid[mm²]	0.2~2.5		
	柔性导线 Flexible[mm²]	0.2~2.5		

材料 Material		
绝缘材料	Insulation Material	PA66
阻燃等级	Flame retardant rating	UL94V-0
导体材料	Conductor Material	Copper alloy
导体表面镀层	Plating of conductor surface	Sn plated

一般参数 Other Data		
间距/极数	Pitch/Poles [mm]/[P]	5.0,5.08 3×2~3×24
剥线长度	Stripping Length [mm]	5~6
螺丝/扭矩	Screw/Torque(Max)[N.m]	/
工作温度	Operating temperature[℃]	-40~+105
焊锡温度	Soldering temperature	260℃/5S
引针尺寸	Pin dimensions [mm]	0.7*0.7
PCB板孔径	PCB Hole Diameter [mm]	∅1.3

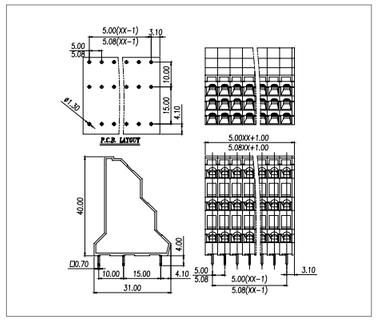

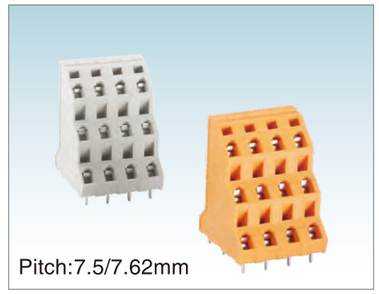

WJ245T3-7.5/7.62

UL/CUL 技术参数 UL/CUL Technical Data				
等级	Use Group	B	C	D
额定电压	Rated Voltage [V]	300	-	300
额定电流	Rated Current [A]	10	-	10
接线范围 Wire Range	单芯线 Solid [AWG]	28~12		
	多芯线 Stranded [AWG]	28~12		
耐电压	Dielectric Voltage-Withstand	1.6KV		

IEC 技术参数 IEC Technical Data				
过电压类别	Overvoltage Category	Ⅲ	Ⅲ	Ⅱ
污染等级	Contamination Class	3	2	2
额定电压	Rated Voltage [V]	400	630	1000
额定电流	Rated Current [A]	21	21	21
额定冲击电压	Impulse withstand voltage [KV]	6	6	6
导线截面积 Conductor cross section	硬质导线 Solid[mm²]	0.2~2.5		
	柔性导线 Flexible[mm²]	0.2~2.5		

材料 Material		
绝缘材料	Insulation Material	PA66
阻燃等级	Flame retardant rating	UL94V-0
导体材料	Conductor Material	Copper alloy
导体表面镀层	Plating of conductor surface	Sn plated

一般参数 Other Data		
间距/极数	Pitch/Poles [mm]/[P]	7.5,7.62 3×2~3×16
剥线长度	Stripping Length [mm]	5~6
螺丝/扭矩	Screw/Torque(Max)[N.m]	/
工作温度	Operating temperature[℃]	-40~+105
焊锡温度	Soldering temperature	260℃/5S
引针尺寸	Pin dimensions [mm]	0.7*0.7
PCB板孔径	PCB Hole Diameter [mm]	∅1.3

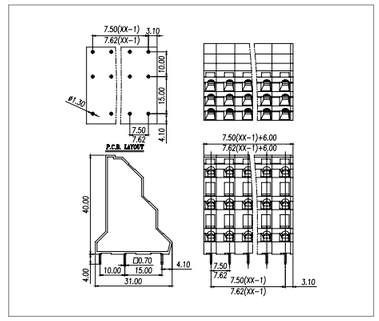

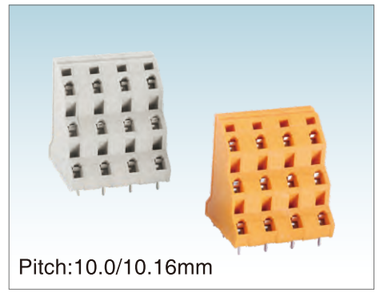

WJ245T3-10.0/10.16

UL/CUL 技术参数 UL/CUL Technical Data				
等级	Use Group	B	C	D
额定电压	Rated Voltage [V]	300	-	300
额定电流	Rated Current [A]	10	-	10
接线范围 Wire Range	单芯线 Solid [AWG]	28~12		
	多芯线 Stranded [AWG]	28~12		
耐电压	Dielectric Voltage-Withstand	1.6KV		

IEC 技术参数 IEC Technical Data				
过电压类别	Overvoltage Category	Ⅲ	Ⅲ	Ⅱ
污染等级	Contamination Class	3	2	2
额定电压	Rated Voltage [V]	630	1000	1000
额定电流	Rated Current [A]	21	21	21
额定冲击电压	Impulse withstand voltage [KV]	8	8	8
导线截面积 Conductor cross section	硬质导线 Solid[mm²]	0.2~2.5		
	柔性导线 Flexible[mm²]	0.2~2.5		

材料 Material		
绝缘材料	Insulation Material	PA66
阻燃等级	Flame retardant rating	UL94V-0
导体材料	Conductor Material	Copper alloy
导体表面镀层	Plating of conductor surface	Sn plated

一般参数 Other Data		
间距/极数	Pitch/Poles [mm]/[P]	10.0,10.16 3×2~3×12
剥线长度	Stripping Length [mm]	5~6
螺丝/扭矩	Screw/Torque(Max)[N.m]	/
工作温度	Operating temperature[℃]	-40~+105
焊锡温度	Soldering temperature	260℃/5S
引针尺寸	Pin dimensions [mm]	0.7*0.7
PCB板孔径	PCB Hole Diameter [mm]	∅1.3

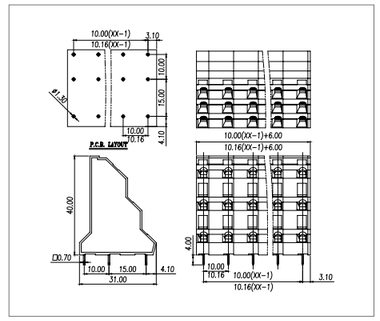

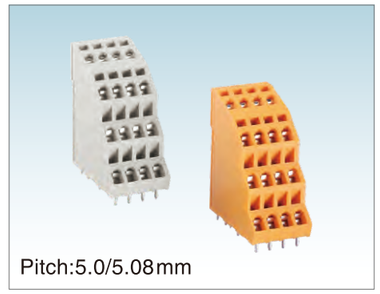

WJ245T4-5.0/5.08

UL/CUL 技术参数 UL/CUL Technical Data				
等级	Use Group	B	C	D
额定电压	Rated Voltage [V]	300	-	300
额定电流	Rated Current [A]	10	-	10
接线范围 Wire Range	单芯线 Solid [AWG]	28~12		
	多芯线 Stranded [AWG]	28~12		
耐电压	Dielectric Voltage-Withstand	1.6KV		

IEC 技术参数 IEC Technical Data				
过电压类别	Overvoltage Category	Ⅲ	Ⅲ	Ⅱ
污染等级	Contamination Class	3	2	2
额定电压	Rated Voltage [V]	250	320	630
额定电流	Rated Current [A]	18	18	18
额定冲击电压	Impulse withstand voltage [KV]	4	4	4
导线截面积 Conductor cross section	硬质导线 Solid[mm²]	0.2~2.5		
	柔性导线 Flexible[mm²]	0.2~2.5		

材料 Material		
绝缘材料	Insulation Material	PA66
阻燃等级	Flame retardant rating	UL94V-0
导体材料	Conductor Material	Copper alloy
导体表面镀层	Plating of conductor surface	Sn plated

一般参数 Other Data		
间距/极数	Pitch/Poles [mm]/[P]	5.0,5.08 4×2~4×24
剥线长度	Stripping Length [mm]	5~6
螺丝/扭矩	Screw/Torque(Max)[N.m]	/
工作温度	Operating temperature[℃]	-40~+105
焊锡温度	Soldering temperature	260℃/5S
引针尺寸	Pin dimensions [mm]	0.7*0.7
PCB板孔径	PCB Hole Diameter [mm]	∅1.3

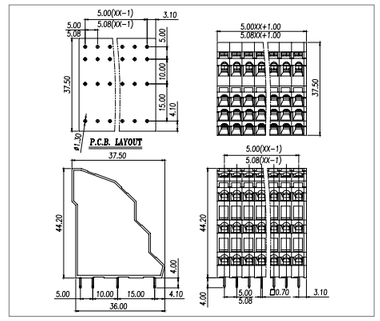

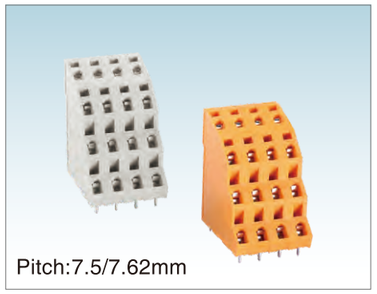

Pitch:7.5/7.62mm

WJ245T4-7.5/7.62

UL/CUL 技术参数 UL/CUL Technical Data				
等级	Use Group	B	C	D
额定电压	Rated Voltage [V]	300	-	300
额定电流	Rated Current [A]	10	-	10
接线范围 Wire Range	单芯线 Solid [AWG]	28~12		
	多芯线 Stranded [AWG]	28~12		
耐电压	Dielectric Voltage-Withstand	1.6KV		

IEC 技术参数 IEC Technical Data				
过电压类别	Overvoltage Category	Ⅲ	Ⅲ	Ⅱ
污染等级	Contamination Class	3	2	2
额定电压	Rated Voltage [V]	400	630	1000
额定电流	Rated Current [A]	18	18	18
额定冲击电压	Impulse withstand voltage [KV]	6	6	6
导线截面积 Conductor cross section	硬质导线 Solid[mm²]	0.2~2.5		
	柔性导线 Flexible[mm²]	0.2~2.5		

材料 Material		
绝缘材料	Insulation Material	PA66
阻燃等级	Flame retardant rating	UL94V-0
导体材料	Conductor Material	Copper alloy
导体表面镀层	Plating of conductor surface	Sn plated

一般参数 Other Data		
间距/极数	Pitch/Poles [mm]/[P]	7.5,7.62 4*2~4*16
剥线长度	Stripping Length [mm]	5~6
螺丝/扭矩	Screw/Torque(Max)[N.m]	/
工作温度	Operating temperature[℃]	-40~+105
焊锡温度	Soldering temperature	260℃/5S
引针尺寸	Pin dimensions [mm]	0.7*0.7
PCB板孔径	PCB Hole Diameter [mm]	∅1.3

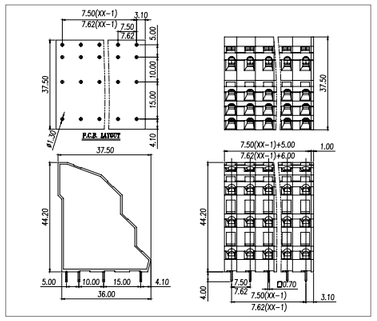

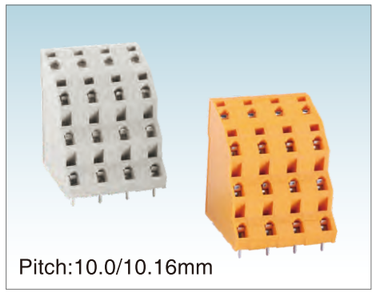

Pitch:10.0/10.16mm

WJ245T4-10.0/10.16

UL/CUL 技术参数 UL/CUL Technical Data				
等级	Use Group	B	C	D
额定电压	Rated Voltage [V]	300	-	300
额定电流	Rated Current [A]	10	-	10
接线范围 Wire Range	单芯线 Solid [AWG]	28~12		
	多芯线 Stranded [AWG]	28~12		
耐电压	Dielectric Voltage-Withstand	1.6KV		

IEC 技术参数 IEC Technical Data				
过电压类别	Overvoltage Category	Ⅲ	Ⅲ	Ⅱ
污染等级	Contamination Class	3	2	2
额定电压	Rated Voltage [V]	630	1000	1000
额定电流	Rated Current [A]	18	18	18
额定冲击电压	Impulse withstand voltage [KV]	8	8	8
导线截面积 Conductor cross section	硬质导线 Solid[mm²]	0.2~2.5		
	柔性导线 Flexible[mm²]	0.2~2.5		

材料 Material		
绝缘材料	Insulation Material	PA66
阻燃等级	Flame retardant rating	UL94V-0
导体材料	Conductor Material	Copper alloy
导体表面镀层	Plating of conductor surface	Sn plated

一般参数 Other Data		
间距/极数	Pitch/Poles [mm]/[P]	10.0,10.16 4*2~4*12
剥线长度	Stripping Length [mm]	5~6
螺丝/扭矩	Screw/Torque(Max)[N.m]	/
工作温度	Operating temperature[℃]	-40~+105
焊锡温度	Soldering temperature	260℃/5S
引针尺寸	Pin dimensions [mm]	0.7*0.7
PCB板孔径	PCB Hole Diameter [mm]	∅1.3

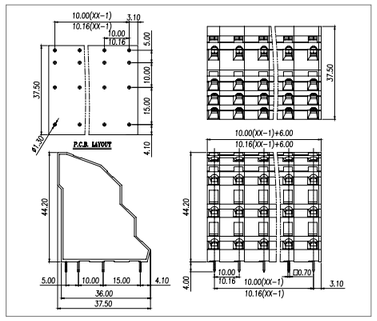

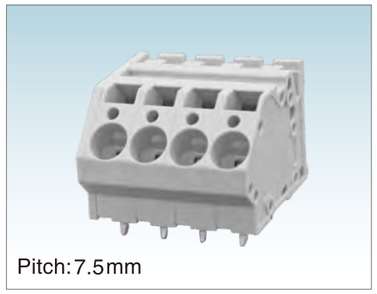

Pitch:7.5mm

WJ246-7.5

UL/CUL 技术参数 UL/CUL Technical Data				
等级	Use Group	B	C	D
额定电压	Rated Voltage [V]	300	150	300
额定电流	Rated Current [A]	30	30	10
接线范围 Wire Range	单芯线 Solid [AWG]	24~10		
	多芯线 Stranded [AWG]	24~10		
耐电压	Dielectric Voltage-Withstand	1.6KV		

IEC 技术参数 IEC Technical Data				
过电压类别	Overvoltage Category	Ⅲ	Ⅲ	Ⅱ
污染等级	Contamination Class	3	2	2
额定电压	Rated Voltage [V]	500	630	1000
额定电流	Rated Current [A]	41	41	41
额定冲击电压	Impulse withstand voltage [KV]	6	6	6
导线截面积 Conductor cross section	硬质导线 Solid[mm²]	0.2~6.0		
	柔性导线 Flexible[mm²]	0.2~6.0		

材料 Material		
绝缘材料	Insulation Material	PA66
阻燃等级	Flame retardant rating	UL94V-0
导体材料	Conductor Material	Copper alloy
导体表面镀层	Plating of conductor surface	Sn plated

一般参数 Other Data		
间距/极数	Pitch/Poles [mm]/[P]	7.5/1~16
剥线长度	Stripping Length [mm]	11~12
螺丝/扭矩	Screw/Torque(Max)[N.m]	/
工作温度	Operating temperature[℃]	-40~+105
焊锡温度	Soldering temperature	260℃/5S
引针尺寸	Pin dimensions [mm]	1.4*1.0
PCB板孔径	PCB Hole Diameter [mm]	∅2.2

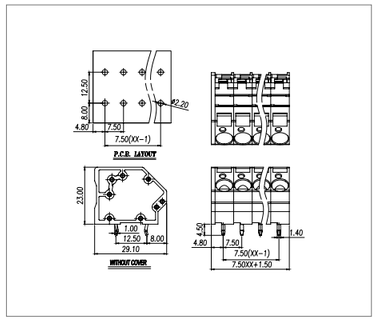

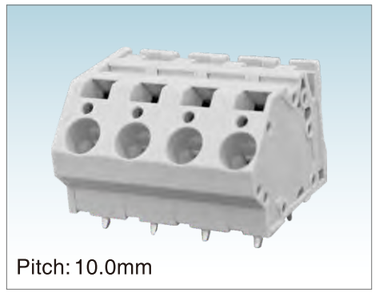

Pitch:10.0mm

WJ246-10.0

UL/CUL 技术参数 UL/CUL Technical Data				
等级	Use Group	B	C	D
额定电压	Rated Voltage [V]	300	150	300
额定电流	Rated Current [A]	30	30	10
接线范围 Wire Range	单芯线 Solid [AWG]	24~10		
	多芯线 Stranded [AWG]	24~10		
耐电压	Dielectric Voltage-Withstand	1.6KV		

IEC 技术参数 IEC Technical Data				
过电压类别	Overvoltage Category	Ⅲ	Ⅲ	Ⅱ
污染等级	Contamination Class	3	2	2
额定电压	Rated Voltage [V]	630	1000	1000
额定电流	Rated Current [A]	41	41	41
额定冲击电压	Impulse withstand voltage [KV]	8	8	8
导线截面积 Conductor cross section	硬质导线 Solid[mm²]	0.2~6.0		
	柔性导线 Flexible[mm²]	0.2~6.0		

材料 Material		
绝缘材料	Insulation Material	PA66
阻燃等级	Flame retardant rating	UL94V-0
导体材料	Conductor Material	Copper alloy
导体表面镀层	Plating of conductor surface	Sn plated

一般参数 Other Data		
间距/极数	Pitch/Poles [mm]/[P]	10.0/2~12
剥线长度	Stripping Length [mm]	11~12
螺丝/扭矩	Screw/Torque(Max)[N.m]	/
工作温度	Operating temperature[℃]	-40~+105
焊锡温度	Soldering temperature	260℃/5S
引针尺寸	Pin dimensions [mm]	1.4*1.0
PCB板孔径	PCB Hole Diameter [mm]	∅2.2

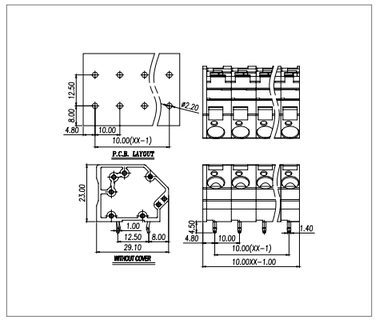



Pitch:5.0mm

WJ247-5.0

UL/CUL 技术参数 UL/CUL Technical Data				
等级	Use Group	B	C	D
额定电压	Rated Voltage [V]	300	-	-
额定电流	Rated Current [A]	8	-	-
接线范围 Wire Range	单芯线 Solid [AWG]	20-16		
	多芯线 Stranded [AWG]	20-16		
耐电压	Dielectric Voltage-Withstand	1.6KV		

IEC 技术参数 IEC Technical Data				
过电压类别	Overvoltage Category	Ⅲ	Ⅲ	Ⅱ
污染等级	Contamination Class	3	2	2
额定电压	Rated Voltage [V]	320	320	320
额定电流	Rated Current [A]	17.5	17.5	17.5
额定冲击电压	Impulse withstand voltage [KV]	4	4	4
导线截面积 Conductor cross section	硬质导线 Solid[mm²]	0.2~1.5		
	柔性导线 Flexible[mm²]	0.2~1.5		

材料 Material		
绝缘材料	Insulation Material	PA66
阻燃等级	Flame retardant rating	UL94V-0
导体材料	Conductor Material	Copper alloy
导体表面镀层	Plating of conductor surface	Sn plated

一般参数 Other Data		
间距/极数	Pitch/Poles [mm]/[P]	5.0/02~24
剥线长度	Stripping Length [mm]	7~8
螺丝/扭矩	Screw/Torque(Max)[N.m]	/
工作温度	Operating temperature[℃]	-40~+105
焊锡温度	Soldering temperature	260℃/5S
引针尺寸	Pin dimensions [mm]	0.5*0.8
PCB板孔径	PCB Hole Diameter [mm]	∅1.1

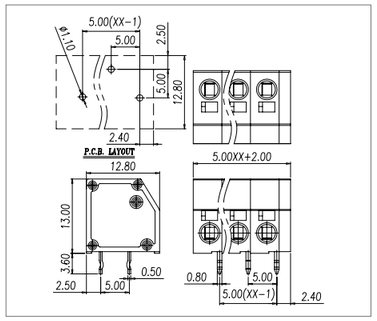



Pitch:7.5mm

WJ247-7.5

UL/CUL 技术参数 UL/CUL Technical Data				
等级	Use Group	B	C	D
额定电压	Rated Voltage [V]	300	-	-
额定电流	Rated Current [A]	8	-	-
接线范围 Wire Range	单芯线 Solid [AWG]	20-16		
	多芯线 Stranded [AWG]	20-16		
耐电压	Dielectric Voltage-Withstand	1.6KV		

IEC 技术参数 IEC Technical Data				
过电压类别	Overvoltage Category	Ⅲ	Ⅲ	Ⅱ
污染等级	Contamination Class	3	2	2
额定电压	Rated Voltage [V]	320	320	320
额定电流	Rated Current [A]	17.5	17.5	17.5
额定冲击电压	Impulse withstand voltage [KV]	4	4	4
导线截面积 Conductor cross section	硬质导线 Solid[mm²]	0.2~1.5		
	柔性导线 Flexible[mm²]	0.2~1.5		

材料 Material		
绝缘材料	Insulation Material	PA66
阻燃等级	Flame retardant rating	UL94V-0
导体材料	Conductor Material	Copper alloy
导体表面镀层	Plating of conductor surface	Sn plated

一般参数 Other Data		
间距/极数	Pitch/Poles [mm]/[P]	7.5/02~24
剥线长度	Stripping Length [mm]	7~8
螺丝/扭矩	Screw/Torque(Max)[N.m]	/
工作温度	Operating temperature[℃]	-40~+105
焊锡温度	Soldering temperature	260℃/5S
引针尺寸	Pin dimensions [mm]	0.5*0.8
PCB板孔径	PCB Hole Diameter [mm]	∅1.1

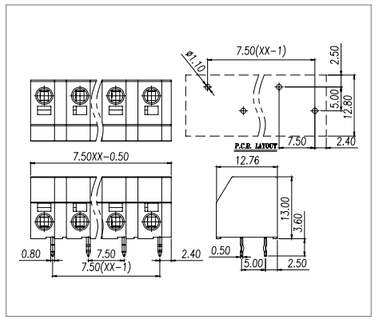



Pitch:3.81/5.08mm

WJ249-3.81/5.08

UL/CUL 技术参数 UL/CUL Technical Data				
等级	Use Group	B	C	D
额定电压	Rated Voltage [V]	300	-	-
额定电流	Rated Current [A]	10	-	-
接线范围 Wire Range	单芯线 Solid [AWG]	26~16		
	多芯线 Stranded [AWG]	26~16		
耐电压	Dielectric Voltage-Withstand	1.6KV		

IEC 技术参数 IEC Technical Data				
过电压类别	Overvoltage Category	Ⅲ	Ⅲ	Ⅱ
污染等级	Contamination Class	3	2	2
额定电压	Rated Voltage [V]	160	160	320
额定电流	Rated Current [A]	9	9	9
额定冲击电压	Impulse withstand voltage [KV]	2.5	2.5	2.5
导线截面积 Conductor cross section	硬质导线 Solid[mm²]	0.2~1.5		
	柔性导线 Flexible[mm²]	0.2~1.5		

材料 Material		
绝缘材料	Insulation Material	PA66
阻燃等级	Flame retardant rating	UL94V-0
导体材料	Conductor Material	Copper alloy
导体表面镀层	Plating of conductor surface	Sn plated

一般参数 Other Data		
间距/极数	Pitch/Poles [mm]/[P]	3.81,5.08/2~24
剥线长度	Stripping Length [mm]	10
螺丝/扭矩	Screw/Torque(Max)[N.m]	/
工作温度	Operating temperature[℃]	-40~+105
焊锡温度	Soldering temperature	260℃/5S
引针尺寸	Pin dimensions [mm]	0.6*1.0
PCB板孔径	PCB Hole Diameter [mm]	∅1.3

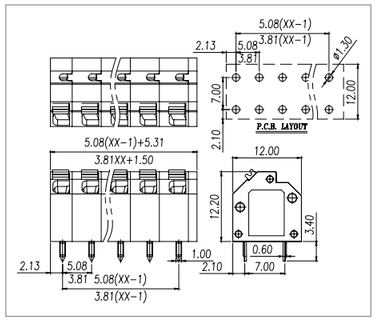



Pitch:2.5mm

WJ250-2.5

UL/CUL 技术参数 UL/CUL Technical Data				
等级	Use Group	B	C	D
额定电压	Rated Voltage [V]	300	-	300
额定电流	Rated Current [A]	4	-	4
接线范围 Wire Range	单芯线 Solid [AWG]	28~20		
	多芯线 Stranded [AWG]	28~20		
耐电压	Dielectric Voltage-Withstand	1.6KV		

IEC 技术参数 IEC Technical Data				
过电压类别	Overvoltage Category	Ⅲ	Ⅲ	Ⅱ
污染等级	Contamination Class	3	2	2
额定电压	Rated Voltage [V]	160	160	320
额定电流	Rated Current [A]	4	4	4
额定冲击电压	Impulse withstand voltage [KV]	2.5	2.5	2.5
导线截面积 Conductor cross section	硬质导线 Solid[mm²]	0.2~0.5		
	柔性导线 Flexible[mm²]	0.2~0.5		

材料 Material		
绝缘材料	Insulation Material	PA66
阻燃等级	Flame retardant rating	UL94V-0
导体材料	Conductor Material	Copper alloy
导体表面镀层	Plating of conductor surface	Sn plated

一般参数 Other Data		
间距/极数	Pitch/Poles [mm]/[P]	2.5/1~30
剥线长度	Stripping Length [mm]	8.5~9.5
螺丝/扭矩	Screw/Torque(Max)[N.m]	/
工作温度	Operating temperature[℃]	-40~+105
焊锡温度	Soldering temperature	260℃/5S
引针尺寸	Pin dimensions [mm]	0.75*0.4
PCB板孔径	PCB Hole Diameter [mm]	∅1.1

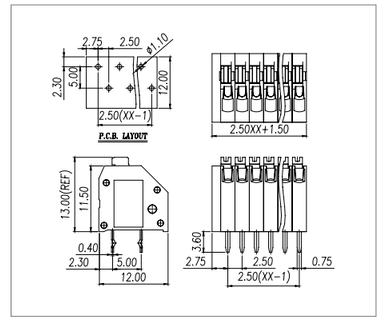



Pitch:3.5mm

WJ250-3.5

UL/CUL 技术参数 UL/CUL Technical Data				
等级	Use Group	B	C	D
额定电压	Rated Voltage [V]	300	-	300
额定电流	Rated Current [A]	5	-	5
接线范围 Wire Range	单芯线 Solid [AWG]	22~18		
	多芯线 Stranded [AWG]	22~18		
耐电压	Dielectric Voltage-Withstand	1.6KV		

IEC 技术参数 IEC Technical Data				
过电压类别	Overvoltage Category	Ⅲ	Ⅲ	Ⅱ
污染等级	Contamination Class	3	2	2
额定电压	Rated Voltage [V]	160	160	320
额定电流	Rated Current [A]	8	8	8
额定冲击电压	Impulse withstand voltage [KV]	2.5	2.5	2.5
导线截面积 Conductor cross section	硬质导线 Solid[mm²]	0.2~1.0		
	柔性导线 Flexible[mm²]	0.2~1.0		

材料 Material		
绝缘材料	Insulation Material	PA66
阻燃等级	Flame retardant rating	UL94V-0
导体材料	Conductor Material	Copper alloy
导体表面镀层	Plating of conductor surface	Sn plated

一般参数 Other Data		
间距/极数	Pitch/Poles [mm]/[P]	3.5/1~30
剥线长度	Stripping Length [mm]	8~9
螺丝/扭矩	Screw/Torque(Max)[N.m]	/
工作温度	Operating temperature[℃]	-40~+105
焊锡温度	Soldering temperature	260℃/5S
引针尺寸	Pin dimensions [mm]	0.75*0.4
PCB板孔径	PCB Hole Diameter [mm]	∅1.2

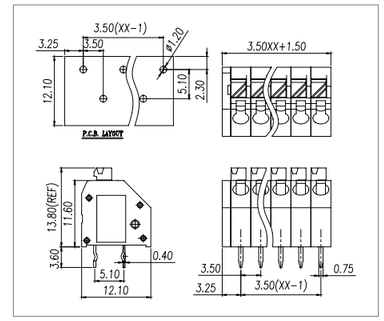



Pitch:5.0mm

WJ250T-5.0

UL/CUL 技术参数 UL/CUL Technical Data				
等级	Use Group	B	C	D
额定电压	Rated Voltage [V]	300	-	300
额定电流	Rated Current [A]	10	-	10
接线范围 Wire Range	单芯线 Solid [AWG]	20~16		
	多芯线 Stranded [AWG]	20~16		
耐电压	Dielectric Voltage-Withstand	1.6KV		

IEC 技术参数 IEC Technical Data				
过电压类别	Overvoltage Category	Ⅲ	Ⅲ	Ⅱ
污染等级	Contamination Class	3	2	2
额定电压	Rated Voltage [V]	320	320	630
额定电流	Rated Current [A]	17.5	17.5	17.5
额定冲击电压	Impulse withstand voltage [KV]	4	4	4
导线截面积 Conductor cross section	硬质导线 Solid[mm²]	0.2~1.5		
	柔性导线 Flexible[mm²]	0.2~1.5		

材料 Material		
绝缘材料	Insulation Material	PA66
阻燃等级	Flame retardant rating	UL94V-0
导体材料	Conductor Material	Copper alloy
导体表面镀层	Plating of conductor surface	Sn plated

一般参数 Other Data		
间距/极数	Pitch/Poles [mm]/[P]	5.0/2*1~2*30
剥线长度	Stripping Length [mm]	9~10
螺丝/扭矩	Screw/Torque(Max)[N.m]	/
工作温度	Operating temperature[℃]	-40~+105
焊锡温度	Soldering temperature	260℃/5S
引针尺寸	Pin dimensions [mm]	0.75*0.5
PCB板孔径	PCB Hole Diameter [mm]	∅1.2

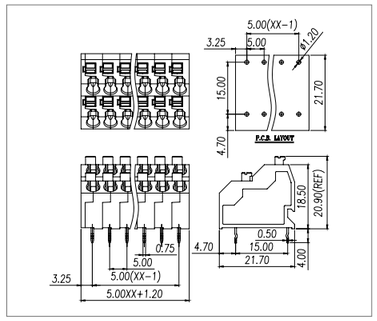

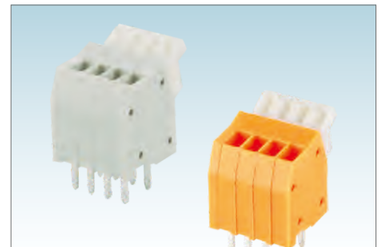

Pitch: 2.5/2.54mm

WJ251-2.5/2.54

UL/CUL 技术参数 UL/CUL Technical Data				
等级	Use Group	B	C	D
额定电压	Rated Voltage [V]	150	-	-
额定电流	Rated Current [A]	4	-	-
接线范围 Wire Range	单芯线 Solid [AWG]	28~20		
	多芯线 Stranded [AWG]	28~20		
耐电压	Dielectric Voltage-Withstand	1.3KV		

IEC 技术参数 IEC Technical Data				
过电压类别	Overvoltage Category	Ⅲ	Ⅲ	Ⅱ
污染等级	Contamination Class	3	2	2
额定电压	Rated Voltage [V]	63	160	320
额定电流	Rated Current [A]	6	6	6
额定冲击电压	Impulse withstand voltage [KV]	2.5	2.5	2.5
导线截面积 Conductor cross section	硬质导线 Solid[mm²]	0.2~0.5		
	柔性导线 Flexible[mm²]	0.2~0.5		

材料 Material		
绝缘材料	Insulation Material	PA66
阻燃等级	Flame retardant rating	UL94V-0
导体材料	Conductor Material	Copper alloy
导体表面镀层	Plating of conductor surface	Sn plated

一般参数 Other Data		
间距/极数	Pitch/Poles [mm]/[P]	2.5,2.54/1~30
剥线长度	Stripping Length [mm]	5~6
螺丝/扭矩	Screw/Torque(Max)[N.m]	/
工作温度	Operating temperature[℃]	-40~+105
焊锡温度	Soldering temperature	260℃/5S
引针尺寸	Pin dimensions [mm]	0.75*0.5
PCB板孔径	PCB Hole Diameter [mm]	∅1.1

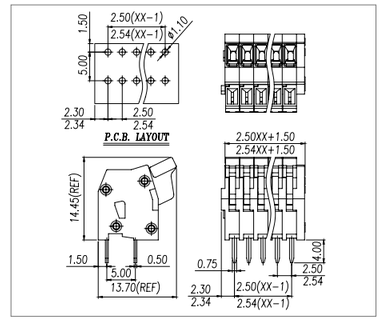



Pitch:5.0mm

WJ252-5.0

UL/CUL 技术参数 UL/CUL Technical Data				
等级	Use Group	B	C	D
额定电压	Rated Voltage [V]	300	-	300
额定电流	Rated Current [A]	10	-	10
接线范围 Wire Range	单芯线 Solid [AWG]	28-16		
	多芯线 Stranded [AWG]	28-16		
耐电压	Dielectric Voltage-Withstand	1.6KV		

IEC 技术参数 IEC Technical Data				
过电压类别	Overvoltage Category	Ⅲ	Ⅲ	Ⅱ
污染等级	Contamination Class	3	2	2
额定电压	Rated Voltage [V]	320	320	320
额定电流	Rated Current [A]	17.5	17.5	17.5
额定冲击电压	Impulse withstand voltage [KV]	4	4	4
导线截面积 Conductor cross section	硬质导线 Solid[mm²]	0.2~1.5		
	柔性导线 Flexible[mm²]	0.2~1.5		

材料 Material		
绝缘材料	Insulation Material	PA66
阻燃等级	Flame retardant rating	UL94V-0
导体材料	Conductor Material	Copper alloy
导体表面镀层	Plating of conductor surface	Sn plated

一般参数 Other Data		
间距/极数	Pitch/Poles [mm]/[P]	5.0/1~24
剥线长度	Stripping Length [mm]	8-9
螺丝/扭矩	Screw/Torque(Max)[N.m]	/
工作温度	Operating temperature[℃]	-40~+105
焊锡温度	Soldering temperature	260℃/5S
引针尺寸	Pin dimensions [mm]	0.6*1.0
PCB板孔径	PCB Hole Diameter [mm]	∅1.3

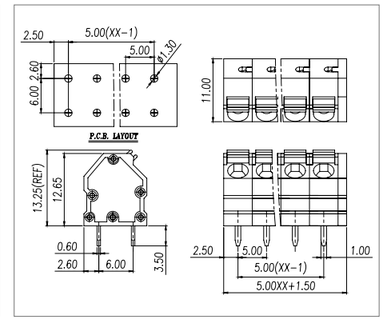



Pitch:5.0mm

WJ252T2-5.0

UL/CUL 技术参数 UL/CUL Technical Data				
等级	Use Group	B	C	D
额定电压	Rated Voltage [V]	300	-	300
额定电流	Rated Current [A]	10	-	10
接线范围 Wire Range	单芯线 Solid [AWG]	28-16		
	多芯线 Stranded [AWG]	28-16		
耐电压	Dielectric Voltage-Withstand	1.6KV		

IEC 技术参数 IEC Technical Data				
过电压类别	Overvoltage Category	Ⅲ	Ⅲ	Ⅱ
污染等级	Contamination Class	3	2	2
额定电压	Rated Voltage [V]	320	320	320
额定电流	Rated Current [A]	17.5	17.5	17.5
额定冲击电压	Impulse withstand voltage [KV]	4	4	4
导线截面积 Conductor cross section	硬质导线 Solid[mm²]	0.2~1.5		
	柔性导线 Flexible[mm²]	0.2~1.5		

材料 Material		
绝缘材料	Insulation Material	PA66
阻燃等级	Flame retardant rating	UL94V-0
导体材料	Conductor Material	Copper alloy
导体表面镀层	Plating of conductor surface	Sn plated

一般参数 Other Data		
间距/极数	Pitch/Poles [mm]/[P]	5.0/2*1-2*24
剥线长度	Stripping Length [mm]	8-9
螺丝/扭矩	Screw/Torque(Max)[N.m]	/
工作温度	Operating temperature[℃]	-40~+105
焊锡温度	Soldering temperature	260℃/5S
引针尺寸	Pin dimensions [mm]	0.6*1.0
PCB板孔径	PCB Hole Diameter [mm]	∅1.3

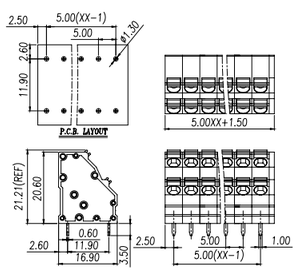



Pitch:5.0mm

WJ252T3-5.0

UL/CUL 技术参数 UL/CUL Technical Data				
等级	Use Group	B	C	D
额定电压	Rated Voltage [V]	300	-	300
额定电流	Rated Current [A]	10	-	10
接线范围 Wire Range	单芯线 Solid [AWG]	28-16		
	多芯线 Stranded [AWG]	28-16		
耐电压	Dielectric Voltage-Withstand	1.6KV		

IEC 技术参数 IEC Technical Data				
过电压类别	Overvoltage Category	Ⅲ	Ⅲ	Ⅱ
污染等级	Contamination Class	3	2	2
额定电压	Rated Voltage [V]	320	320	320
额定电流	Rated Current [A]	17.5	17.5	17.5
额定冲击电压	Impulse withstand voltage [KV]	4	4	4
导线截面积 Conductor cross section	硬质导线 Solid[mm²]	0.2~1.5		
	柔性导线 Flexible[mm²]	0.2~1.5		

材料 Material		
绝缘材料	Insulation Material	PA66
阻燃等级	Flame retardant rating	UL94V-0
导体材料	Conductor Material	Copper alloy
导体表面镀层	Plating of conductor surface	Sn plated

一般参数 Other Data		
间距/极数	Pitch/Poles [mm]/[P]	5.0/3*1-3*24
剥线长度	Stripping Length [mm]	8-9
螺丝/扭矩	Screw/Torque(Max)[N.m]	/
工作温度	Operating temperature[℃]	-40~+105
焊锡温度	Soldering temperature	260℃/5S
引针尺寸	Pin dimensions [mm]	0.6*1.0
PCB板孔径	PCB Hole Diameter [mm]	∅1.3

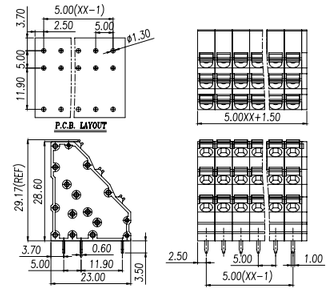



MCS多用途连接器
MCS TERMINAL BLOCK

MCS 多用途连接器系列适用于单股,多股及细多股线的连接,使用高弹性的优质的弹簧夹,具有接线安全,快捷,可靠.适用于线到线,板到线,板到板的连接实现电力和信号的传输,带有防插错定位销,导通测试孔,并提供多种定位固定方式是应用最为广泛的连接器之一, 间距2.5mm至7.62mm可供选择. 产品设计符合IEC60998、 UL1059、UL486E、CSA C22.2 No.158等国际标准。

Uses high-elastic steel mating with perfect metallic bending technology, thus the spring clamp can hold wire tightly without loosen. The features of the clamp are fast wiring conveniently, anti-vibration, free maintenance and very high reliability.
The design can match with all kinds of accessory. We offer coding to prevent from mistaken wiring. The strain relief design makes the plug be secured in the socket without coming apart from the socket by accident. Pitch: 2.5mm up to 7.62mm, Pole sizes: 2P up to 24P
The product is designed in accordance with IEC 60998, UL1059, CSA22.2NO.158 standards.

ISO14001 ISO45001 ISO9001 ISO80079-34 ISO/TS 22163

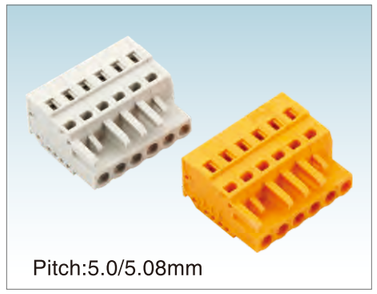

WJ0401/0501-01XX

UL/CUL 技术参数
UL/CUL Technical Data

等级	Use Group	B	C	D
额定电压	Rated Voltage [V]	300	-	300
额定电流	Rated Current [A]	15	-	10
接线范围 Wire Range	单芯线 Solid [AWG]	28~12		
	多芯线 Stranded [AWG]	28~12		
耐电压	Dielectric Voltage-Withstand	1.6KV		

IEC 技术参数
IEC Technical Data

过电压类别	Overvoltage Category	Ⅲ	Ⅲ	Ⅱ
污染等级	Contamination Class	3	2	2
额定电压	Rated Voltage [V]	320	320	630
额定电流	Rated Current [A]	16	16	16
额定冲击电压	Impulse withstand voltage [KV]	4	4	4
导线截面积 Conductor cross section	硬质导线 Solid[mm²]	0.25~2.5		
	柔性导线 Flexible[mm²]	0.25~2.5		

材料 Material

绝缘材料	Insulation Material	PA66
阻燃等级	Flame retardant rating	UL94V-0
导体材料	Conductor Material	Copper alloy
导体表面镀层	Plating of conductor surface	Sn plated

一般参数 Other Data

间距/极数	Pitch/Poles [mm]/[P]	5.0,5.08/2~24
剥线长度	Stripping Length [mm]	8~9
螺丝/扭矩	Screw/Torque(Max)[N.m]	/
工作温度	Operating temperature[℃]	-40~+105
焊锡温度	Soldering temperature	/
引针尺寸	Pin dimensions [mm]	/
PCB板孔径	PCB Hole Diameter [mm]	/

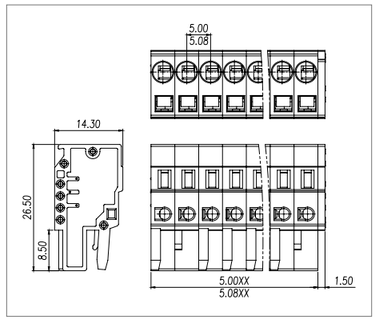

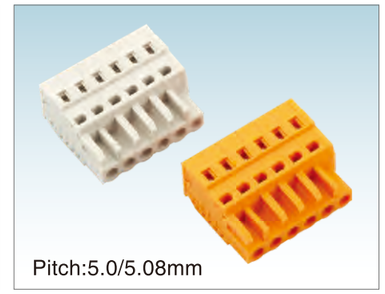

WJ0401/0501-02XX

UL/CUL 技术参数
UL/CUL Technical Data

等级	Use Group	B	C	D
额定电压	Rated Voltage [V]	300	-	300
额定电流	Rated Current [A]	15	-	10
接线范围 Wire Range	单芯线 Solid [AWG]	28~12		
	多芯线 Stranded [AWG]	28~12		
耐电压	Dielectric Voltage-Withstand	1.6KV		

IEC 技术参数
IEC Technical Data

过电压类别	Overvoltage Category	Ⅲ	Ⅲ	Ⅱ
污染等级	Contamination Class	3	2	2
额定电压	Rated Voltage [V]	320	320	630
额定电流	Rated Current [A]	16	16	16
额定冲击电压	Impulse withstand voltage [KV]	4	4	4
导线截面积 Conductor cross section	硬质导线 Solid[mm²]	0.25~2.5		
	柔性导线 Flexible[mm²]	0.25~2.5		

材料 Material

绝缘材料	Insulation Material	PA66
阻燃等级	Flame retardant rating	UL94V-0
导体材料	Conductor Material	Copper alloy
导体表面镀层	Plating of conductor surface	Sn plated

一般参数 Other Data

间距/极数	Pitch/Poles [mm]/[P]	5.0,5.08/2~24
剥线长度	Stripping Length [mm]	8~9
螺丝/扭矩	Screw/Torque(Max)[N.m]	/
工作温度	Operating temperature[℃]	-40~+105
焊锡温度	Soldering temperature	/
引针尺寸	Pin dimensions [mm]	/
PCB板孔径	PCB Hole Diameter [mm]	/

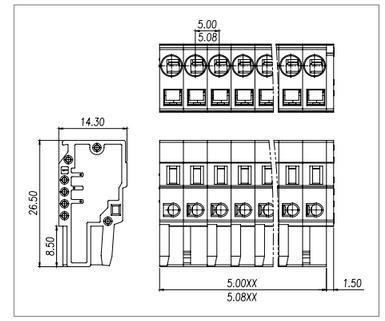

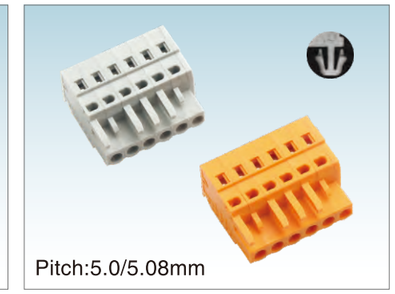

WJ0401/0501-03XX

UL/CUL 技术参数
UL/CUL Technical Data

等级	Use Group	B	C	D
额定电压	Rated Voltage [V]	300	-	300
额定电流	Rated Current [A]	15	-	10
接线范围 Wire Range	单芯线 Solid [AWG]	28~12		
	多芯线 Stranded [AWG]	28~12		
耐电压	Dielectric Voltage-Withstand	1.6KV		

IEC 技术参数
IEC Technical Data

过电压类别	Overvoltage Category	Ⅲ	Ⅲ	Ⅱ
污染等级	Contamination Class	3	2	2
额定电压	Rated Voltage [V]	320	320	630
额定电流	Rated Current [A]	16	16	16
额定冲击电压	Impulse withstand voltage [KV]	4	4	4
导线截面积 Conductor cross section	硬质导线 Solid[mm²]	0.25~2.5		
	柔性导线 Flexible[mm²]	0.25~2.5		

材料 Material

绝缘材料	Insulation Material	PA66
阻燃等级	Flame retardant rating	UL94V-0
导体材料	Conductor Material	Copper alloy
导体表面镀层	Plating of conductor surface	Sn plated

一般参数 Other Data

间距/极数	Pitch/Poles [mm]/[P]	5.0,5.08/2~24
剥线长度	Stripping Length [mm]	8~9
螺丝/扭矩	Screw/Torque(Max)[N.m]	/
工作温度	Operating temperature[℃]	-40~+105
焊锡温度	Soldering temperature	/
引针尺寸	Pin dimensions [mm]	/
PCB板孔径	PCB Hole Diameter [mm]	/

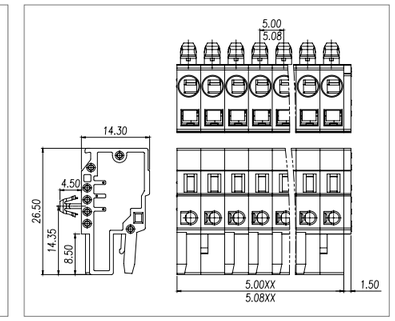

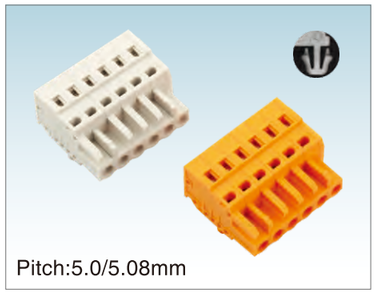

Pitch:5.0/5.08mm

WJ0401/0501-04XX

UL/CUL 技术参数 UL/CUL Technical Data				
等级	Use Group	B	C	D
额定电压	Rated Voltage [V]	300	-	300
额定电流	Rated Current [A]	15	-	10
接线范围 Wire Range	单芯线 Solid [AWG]	28~12		
	多芯线 Stranded [AWG]	28~12		
耐电压	Dielectric Voltage-Withstand	1.6KV		

IEC 技术参数 IEC Technical Data				
过电压类别	Overvoltage Category	Ⅲ	Ⅲ	Ⅱ
污染等级	Contamination Class	3	2	2
额定电压	Rated Voltage [V]	320	320	630
额定电流	Rated Current [A]	16	16	16
额定冲击电压	Impulse withstand voltage [KV]	4	4	4
导线截面积 Conductor cross section	硬质导线 Solid[mm²]	0.25~2.5		
	柔性导线 Flexible[mm²]	0.25~2.5		

材料 Material		
绝缘材料	Insulation Material	PA66
阻燃等级	Flame retardant rating	UL94V-0
导体材料	Conductor Material	Copper alloy
导体表面镀层	Plating of conductor surface	Sn plated

一般参数 Other Data		
间距/极数	Pitch/Poles [mm]/[P]	5.0,5.08/2~24
剥线长度	Stripping Length [mm]	8~9
螺丝/扭矩	Screw/Torque(Max)[N.m]	/
工作温度	Operating temperature[℃]	-40~+105
焊锡温度	Soldering temperature	/
引针尺寸	Pin dimensions [mm]	/
PCB板孔径	PCB Hole Diameter [mm]	/

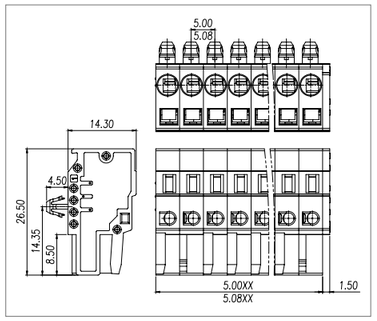

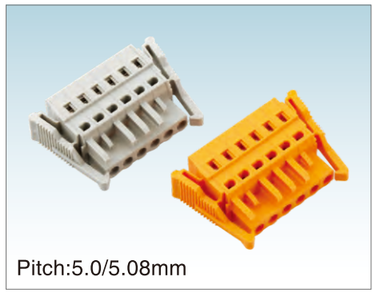

Pitch:5.0/5.08mm

WJ0401/0501-05XX

UL/CUL 技术参数 UL/CUL Technical Data				
等级	Use Group	B	C	D
额定电压	Rated Voltage [V]	300	-	300
额定电流	Rated Current [A]	15	-	10
接线范围 Wire Range	单芯线 Solid [AWG]	28~12		
	多芯线 Stranded [AWG]	28~12		
耐电压	Dielectric Voltage-Withstand	1.6KV		

IEC 技术参数 IEC Technical Data				
过电压类别	Overvoltage Category	Ⅲ	Ⅲ	Ⅱ
污染等级	Contamination Class	3	2	2
额定电压	Rated Voltage [V]	320	320	630
额定电流	Rated Current [A]	16	16	16
额定冲击电压	Impulse withstand voltage [KV]	4	4	4
导线截面积 Conductor cross section	硬质导线 Solid[mm²]	0.25~2.5		
	柔性导线 Flexible[mm²]	0.25~2.5		

材料 Material		
绝缘材料	Insulation Material	PA66
阻燃等级	Flame retardant rating	UL94V-0
导体材料	Conductor Material	Copper alloy
导体表面镀层	Plating of conductor surface	Sn plated

一般参数 Other Data		
间距/极数	Pitch/Poles [mm]/[P]	5.0,5.08/2~24
剥线长度	Stripping Length [mm]	8~9
螺丝/扭矩	Screw/Torque(Max)[N.m]	/
工作温度	Operating temperature[℃]	-40~+105
焊锡温度	Soldering temperature	/
引针尺寸	Pin dimensions [mm]	/
PCB板孔径	PCB Hole Diameter [mm]	/

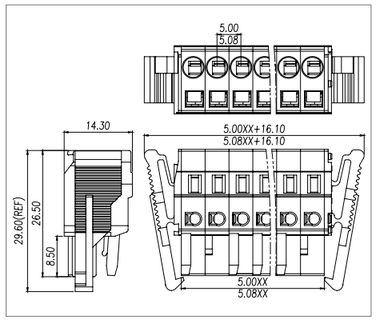

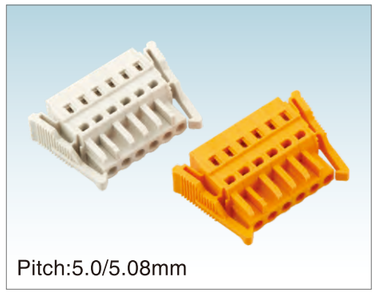

Pitch:5.0/5.08mm

WJ0401/0501-06XX

UL/CUL 技术参数 UL/CUL Technical Data				
等级	Use Group	B	C	D
额定电压	Rated Voltage [V]	300	-	300
额定电流	Rated Current [A]	15	-	10
接线范围 Wire Range	单芯线 Solid [AWG]	28~12		
	多芯线 Stranded [AWG]	28~12		
耐电压	Dielectric Voltage-Withstand	1.6KV		

IEC 技术参数 IEC Technical Data				
过电压类别	Overvoltage Category	Ⅲ	Ⅲ	Ⅱ
污染等级	Contamination Class	3	2	2
额定电压	Rated Voltage [V]	320	320	630
额定电流	Rated Current [A]	16	16	16
额定冲击电压	Impulse withstand voltage [KV]	4	4	4
导线截面积 Conductor cross section	硬质导线 Solid[mm²]	0.25~2.5		
	柔性导线 Flexible[mm²]	0.25~2.5		

材料 Material		
绝缘材料	Insulation Material	PA66
阻燃等级	Flame retardant rating	UL94V-0
导体材料	Conductor Material	Copper alloy
导体表面镀层	Plating of conductor surface	Sn plated

一般参数 Other Data		
间距/极数	Pitch/Poles [mm]/[P]	5.0,5.08/2~24
剥线长度	Stripping Length [mm]	8~9
螺丝/扭矩	Screw/Torque(Max)[N.m]	/
工作温度	Operating temperature[℃]	-40~+105
焊锡温度	Soldering temperature	/
引针尺寸	Pin dimensions [mm]	/
PCB板孔径	PCB Hole Diameter [mm]	/

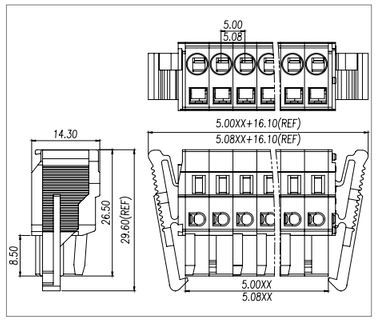

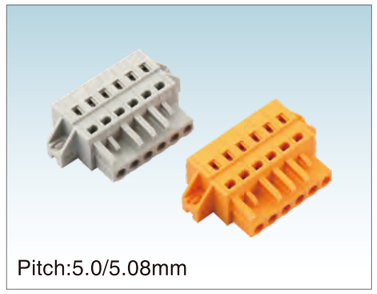

Pitch:5.0/5.08mm

WJ0401/0501-07XX

UL/CUL 技术参数 UL/CUL Technical Data				
等级	Use Group	B	C	D
额定电压	Rated Voltage [V]	300	-	300
额定电流	Rated Current [A]	15	-	10
接线范围 Wire Range	单芯线 Solid [AWG]	28~12		
	多芯线 Stranded [AWG]	28~12		
耐电压	Dielectric Voltage-Withstand	1.6KV		

IEC 技术参数 IEC Technical Data				
过电压类别	Overvoltage Category	Ⅲ	Ⅲ	Ⅱ
污染等级	Contamination Class	3	2	2
额定电压	Rated Voltage [V]	320	320	630
额定电流	Rated Current [A]	16	16	16
额定冲击电压	Impulse withstand voltage [KV]	4	4	4
导线截面积 Conductor cross section	硬质导线 Solid[mm²]	0.25~2.5		
	柔性导线 Flexible[mm²]	0.25~2.5		

材料 Material		
绝缘材料	Insulation Material	PA66
阻燃等级	Flame retardant rating	UL94V-0
导体材料	Conductor Material	Copper alloy
导体表面镀层	Plating of conductor surface	Sn plated

一般参数 Other Data		
间距/极数	Pitch/Poles [mm]/[P]	5.0,5.08/2~24
剥线长度	Stripping Length [mm]	8~9
螺丝/扭矩	Screw/Torque(Max)[N.m]	/
工作温度	Operating temperature[℃]	-40~+105
焊锡温度	Soldering temperature	/
引针尺寸	Pin dimensions [mm]	/
PCB板孔径	PCB Hole Diameter [mm]	/

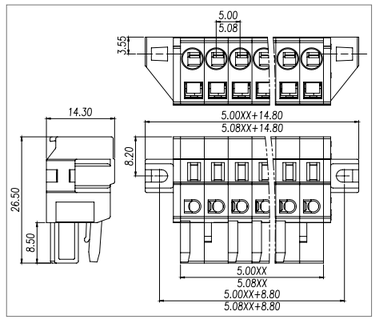

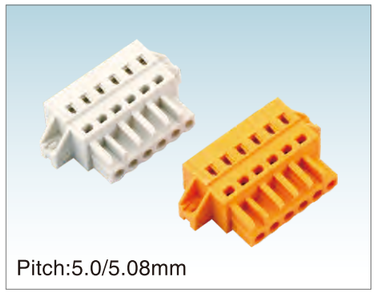

Pitch:5.0/5.08mm

WJ0401/0501-08XX

UL/CUL 技术参数 UL/CUL Technical Data				
等级	Use Group	B	C	D
额定电压	Rated Voltage [V]	300	-	300
额定电流	Rated Current [A]	15	-	10
接线范围 Wire Range	单芯线 Solid [AWG]	28~12		
	多芯线 Stranded [AWG]	28~12		
耐电压	Dielectric Voltage-Withstand	1.6KV		

IEC 技术参数 IEC Technical Data				
过电压类别	Overvoltage Category	Ⅲ	Ⅲ	Ⅱ
污染等级	Contamination Class	3	2	2
额定电压	Rated Voltage [V]	320	320	630
额定电流	Rated Current [A]	16	16	16
额定冲击电压	Impulse withstand voltage [KV]	4	4	4
导线截面积 Conductor cross section	硬质导线 Solid[mm²]	0.25~2.5		
	柔性导线 Flexible[mm²]	0.25~2.5		

材料 Material		
绝缘材料	Insulation Material	PA66
阻燃等级	Flame retardant rating	UL94V-0
导体材料	Conductor Material	Copper alloy
导体表面镀层	Plating of conductor surface	Sn plated

一般参数 Other Data		
间距/极数	Pitch/Poles [mm]/[P]	5.0,5.08/2~24
剥线长度	Stripping Length [mm]	8~9
螺丝/扭矩	Screw/Torque(Max)[N.m]	/
工作温度	Operating temperature[℃]	-40~+105
焊锡温度	Soldering temperature	/
引针尺寸	Pin dimensions [mm]	/
PCB板孔径	PCB Hole Diameter [mm]	/

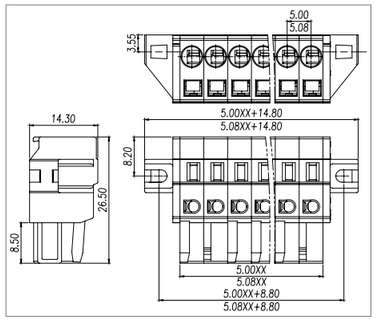

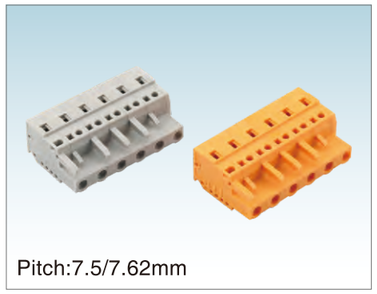

Pitch:7.5/7.62mm

WJ0601/0701-01XX

UL/CUL 技术参数 UL/CUL Technical Data				
等级	Use Group	B	C	D
额定电压	Rated Voltage [V]	300	-	300
额定电流	Rated Current [A]	15	-	10
接线范围 Wire Range	单芯线 Solid [AWG]	28~12		
	多芯线 Stranded [AWG]	28~12		
耐电压	Dielectric Voltage-Withstand	1.6KV		

IEC 技术参数 IEC Technical Data				
过电压类别	Overvoltage Category	Ⅲ	Ⅲ	Ⅱ
污染等级	Contamination Class	3	2	2
额定电压	Rated Voltage [V]	320	320	630
额定电流	Rated Current [A]	16	16	16
额定冲击电压	Impulse withstand voltage [KV]	6	6	6
导线截面积 Conductor cross section	硬质导线 Solid[mm²]	0.25~2.5		
	柔性导线 Flexible[mm²]	0.25~2.5		

材料 Material		
绝缘材料	Insulation Material	PA66
阻燃等级	Flame retardant rating	UL94V-0
导体材料	Conductor Material	Copper alloy
导体表面镀层	Plating of conductor surface	Sn plated

一般参数 Other Data		
间距/极数	Pitch/Poles [mm]/[P]	7.5,7.62/2~24
剥线长度	Stripping Length [mm]	8~9
螺丝/扭矩	Screw/Torque(Max)[N.m]	/
工作温度	Operating temperature[℃]	-40~+105
焊锡温度	Soldering temperature	/
引针尺寸	Pin dimensions [mm]	/
PCB板孔径	PCB Hole Diameter [mm]	/

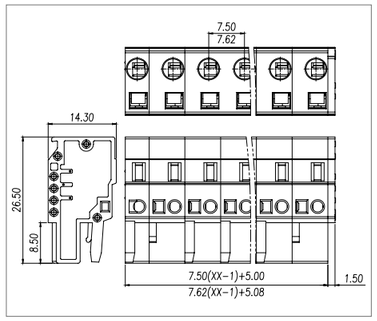

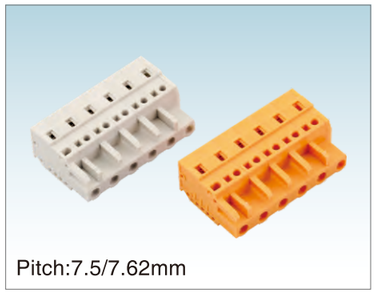

Pitch:7.5/7.62mm

WJ0601/0701-02XX

UL/CUL 技术参数 UL/CUL Technical Data				
等级	Use Group	B	C	D
额定电压	Rated Voltage [V]	300	-	300
额定电流	Rated Current [A]	15	-	10
接线范围 Wire Range	单芯线 Solid [AWG]	28~12		
	多芯线 Stranded [AWG]	28~12		
耐电压	Dielectric Voltage-Withstand	1.6KV		

IEC 技术参数 IEC Technical Data				
过电压类别	Overvoltage Category	Ⅲ	Ⅲ	Ⅱ
污染等级	Contamination Class	3	2	2
额定电压	Rated Voltage [V]	320	320	630
额定电流	Rated Current [A]	16	16	16
额定冲击电压	Impulse withstand voltage [KV]	6	6	6
导线截面积 Conductor cross section	硬质导线 Solid[mm²]	0.25~2.5		
	柔性导线 Flexible[mm²]	0.25~2.5		

材料 Material		
绝缘材料	Insulation Material	PA66
阻燃等级	Flame retardant rating	UL94V-0
导体材料	Conductor Material	Copper alloy
导体表面镀层	Plating of conductor surface	Sn plated

一般参数 Other Data		
间距/极数	Pitch/Poles [mm]/[P]	7.5,7.62/2~24
剥线长度	Stripping Length [mm]	8~9
螺丝/扭矩	Screw/Torque(Max)[N.m]	/
工作温度	Operating temperature[℃]	-40~+105
焊锡温度	Soldering temperature	/
引针尺寸	Pin dimensions [mm]	/
PCB板孔径	PCB Hole Diameter [mm]	/

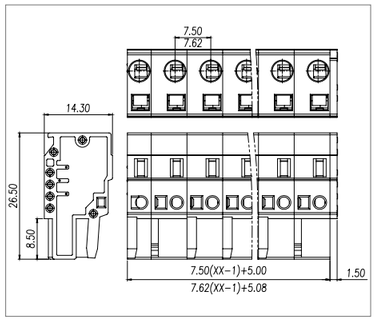

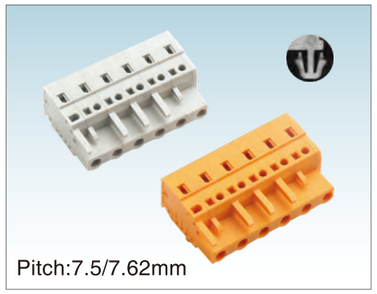

Pitch:7.5/7.62mm

WJ0601/0701-03XX

UL/CUL 技术参数 UL/CUL Technical Data				
等级	Use Group	B	C	D
额定电压	Rated Voltage [V]	300	-	300
额定电流	Rated Current [A]	15	-	10
接线范围 Wire Range	单芯线 Solid [AWG]	28~12		
	多芯线 Stranded [AWG]	28~12		
耐电压	Dielectric Voltage-Withstand	1.6KV		

IEC 技术参数 IEC Technical Data				
过电压类别	Overvoltage Category	Ⅲ	Ⅲ	Ⅱ
污染等级	Contamination Class	3	2	2
额定电压	Rated Voltage [V]	320	320	630
额定电流	Rated Current [A]	16	16	16
额定冲击电压	Impulse withstand voltage [KV]	6	6	6
导线截面积 Conductor cross section	硬质导线 Solid[mm²]	0.25~2.5		
	柔性导线 Flexible[mm²]	0.25~2.5		

材料 Material		
绝缘材料	Insulation Material	PA66
阻燃等级	Flame retardant rating	UL94V-0
导体材料	Conductor Material	Copper alloy
导体表面镀层	Plating of conductor surface	Sn plated

一般参数 Other Data		
间距/极数	Pitch/Poles [mm]/[P]	7.5,7.62/2~24
剥线长度	Stripping Length [mm]	8~9
螺丝/扭矩	Screw/Torque(Max)[N.m]	/
工作温度	Operating temperature[℃]	-40~+105
焊锡温度	Soldering temperature	/
引针尺寸	Pin dimensions [mm]	/
PCB板孔径	PCB Hole Diameter [mm]	/

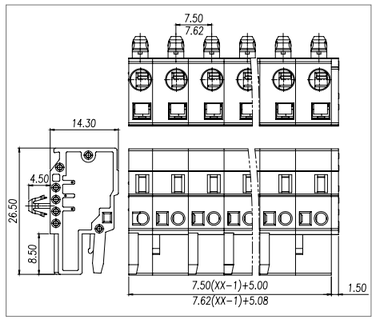

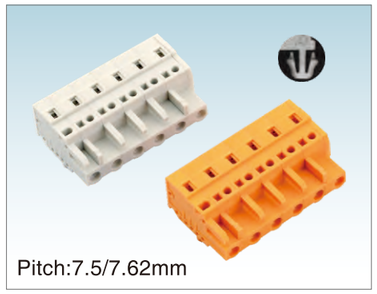

Pitch:7.5/7.62mm

WJ0601/0701-04XX

UL/CUL 技术参数 UL/CUL Technical Data				
等级	Use Group	B	C	D
额定电压	Rated Voltage [V]	300	-	300
额定电流	Rated Current [A]	15	-	10
接线范围 Wire Range	单芯线 Solid [AWG]	28~12		
	多芯线 Stranded [AWG]	28~12		
耐电压	Dielectric Voltage-Withstand	1.6KV		

IEC 技术参数 IEC Technical Data				
过电压类别	Overvoltage Category	Ⅲ	Ⅲ	Ⅱ
污染等级	Contamination Class	3	2	2
额定电压	Rated Voltage [V]	320	320	630
额定电流	Rated Current [A]	16	16	16
额定冲击电压	Impulse withstand voltage [KV]	6	6	6
导线截面积 Conductor cross section	硬质导线 Solid[mm²]	0.25~2.5		
	柔性导线 Flexible[mm²]	0.25~2.5		

材料 Material		
绝缘材料	Insulation Material	PA66
阻燃等级	Flame retardant rating	UL94V-0
导体材料	Conductor Material	Copper alloy
导体表面镀层	Plating of conductor surface	Sn plated

一般参数 Other Data		
间距/极数	Pitch/Poles [mm]/[P]	7.5,7.62/2~24
剥线长度	Stripping Length [mm]	8~9
螺丝/扭矩	Screw/Torque(Max)[N.m]	/
工作温度	Operating temperature[℃]	-40~+105
焊锡温度	Soldering temperature	/
引针尺寸	Pin dimensions [mm]	/
PCB板孔径	PCB Hole Diameter [mm]	/

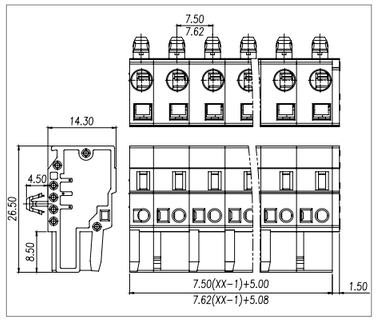



Pitch:7.5/7.62mm

WJ0601/0701-05XX

UL/CUL 技术参数 UL/CUL Technical Data				
等级	Use Group	B	C	D
额定电压	Rated Voltage [V]	300	-	300
额定电流	Rated Current [A]	15	-	10
接线范围 Wire Range	单芯线 Solid [AWG]	28~12		
	多芯线 Stranded [AWG]	28~12		
耐电压	Dielectric Voltage-Withstand	1.6KV		

IEC 技术参数 IEC Technical Data				
过电压类别	Overvoltage Category	Ⅲ	Ⅲ	Ⅱ
污染等级	Contamination Class	3	2	2
额定电压	Rated Voltage [V]	320	320	630
额定电流	Rated Current [A]	16	16	16
额定冲击电压	Impulse withstand voltage [KV]	6	6	6
导线截面积 Conductor cross section	硬质导线 Solid[mm²]	0.25~2.5		
	柔性导线 Flexible[mm²]	0.25~2.5		

材料 Material		
绝缘材料	Insulation Material	PA66
阻燃等级	Flame retardant rating	UL94V-0
导体材料	Conductor Material	Copper alloy
导体表面镀层	Plating of conductor surface	Sn plated

一般参数 Other Data		
间距/极数	Pitch/Poles [mm]/[P]	7.5,7.62/2~24
剥线长度	Stripping Length [mm]	8~9
螺丝/扭矩	Screw/Torque(Max)[N.m]	/
工作温度	Operating temperature[℃]	-40~+105
焊锡温度	Soldering temperature	/
引针尺寸	Pin dimensions [mm]	/
PCB板孔径	PCB Hole Diameter [mm]	/

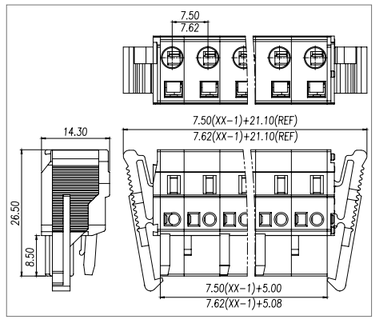



Pitch:7.5/7.62mm

WJ0601/0701-06XX

UL/CUL 技术参数 UL/CUL Technical Data				
等级	Use Group	B	C	D
额定电压	Rated Voltage [V]	300	-	300
额定电流	Rated Current [A]	15	-	10
接线范围 Wire Range	单芯线 Solid [AWG]	28~12		
	多芯线 Stranded [AWG]	28~12		
耐电压	Dielectric Voltage-Withstand	1.6KV		

IEC 技术参数 IEC Technical Data				
过电压类别	Overvoltage Category	Ⅲ	Ⅲ	Ⅱ
污染等级	Contamination Class	3	2	2
额定电压	Rated Voltage [V]	320	320	630
额定电流	Rated Current [A]	16	16	16
额定冲击电压	Impulse withstand voltage [KV]	6	6	6
导线截面积 Conductor cross section	硬质导线 Solid[mm²]	0.25~2.5		
	柔性导线 Flexible[mm²]	0.25~2.5		

材料 Material		
绝缘材料	Insulation Material	PA66
阻燃等级	Flame retardant rating	UL94V-0
导体材料	Conductor Material	Copper alloy
导体表面镀层	Plating of conductor surface	Sn plated

一般参数 Other Data		
间距/极数	Pitch/Poles [mm]/[P]	7.5,7.62/2~24
剥线长度	Stripping Length [mm]	8~9
螺丝/扭矩	Screw/Torque(Max)[N.m]	/
工作温度	Operating temperature[℃]	-40~+105
焊锡温度	Soldering temperature	/
引针尺寸	Pin dimensions [mm]	/
PCB板孔径	PCB Hole Diameter [mm]	/

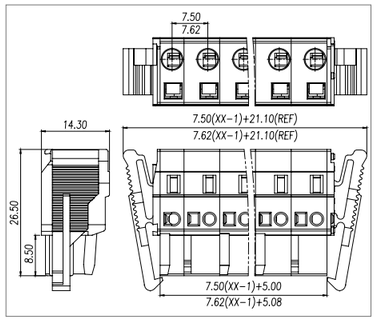



Pitch:7.5/7.62mm

WJ0601/0701-07XX

UL/CUL 技术参数 UL/CUL Technical Data				
等级	Use Group	B	C	D
额定电压	Rated Voltage [V]	300	-	300
额定电流	Rated Current [A]	15	-	10
接线范围 Wire Range	单芯线 Solid [AWG]	28~12		
	多芯线 Stranded [AWG]	28~12		
耐电压	Dielectric Voltage-Withstand	1.6KV		

IEC 技术参数 IEC Technical Data				
过电压类别	Overvoltage Category	Ⅲ	Ⅲ	Ⅱ
污染等级	Contamination Class	3	2	2
额定电压	Rated Voltage [V]	320	320	630
额定电流	Rated Current [A]	16	16	16
额定冲击电压	Impulse withstand voltage [KV]	6	6	6
导线截面积 Conductor cross section	硬质导线 Solid[mm²]	0.25~2.5		
	柔性导线 Flexible[mm²]	0.25~2.5		

材料 Material		
绝缘材料	Insulation Material	PA66
阻燃等级	Flame retardant rating	UL94V-0
导体材料	Conductor Material	Copper alloy
导体表面镀层	Plating of conductor surface	Sn plated

一般参数 Other Data		
间距/极数	Pitch/Poles [mm]/[P]	7.5,7.62/2~24
剥线长度	Stripping Length [mm]	8~9
螺丝/扭矩	Screw/Torque(Max)[N.m]	/
工作温度	Operating temperature[℃]	-40~+105
焊锡温度	Soldering temperature	/
引针尺寸	Pin dimensions [mm]	/
PCB板孔径	PCB Hole Diameter [mm]	/

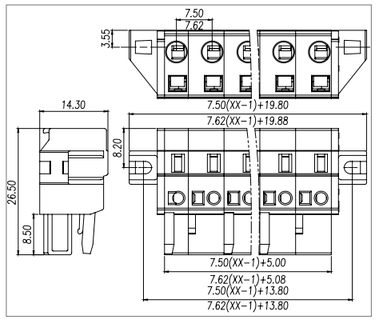

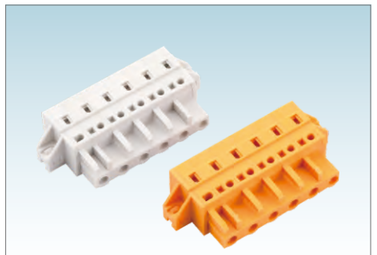

Pitch:7.5/7.62mm

WJ0601/0701-08XX

UL/CUL 技术参数 UL/CUL Technical Data				
等级	Use Group	B	C	D
额定电压	Rated Voltage [V]	300	-	300
额定电流	Rated Current [A]	15	-	10
接线范围 Wire Range	单芯线 Solid [AWG]	28~12		
	多芯线 Stranded [AWG]	28~12		
耐电压	Dielectric Voltage-Withstand	1.6KV		
IEC 技术参数 IEC Technical Data				
过电压类别	Overvoltage Category	Ⅲ	Ⅲ	Ⅱ
污染等级	Contamination Class	3	2	2
额定电压	Rated Voltage [V]	320	320	630
额定电流	Rated Current [A]	16	16	16
额定冲击电压	Impulse withstand voltage [KV]	6	6	6
导线截面积 Conductor cross section	硬质导线 Solid[mm²]	0.25~2.5		
	柔性导线 Flexible[mm²]	0.25~2.5		
材料 Material				
绝缘材料	Insulation Material	PA66		
阻燃等级	Flame retardant rating	UL94V-0		
导体材料	Conductor Material	Copper alloy		
导体表面镀层	Plating of conductor surface	Sn plated		
一般参数 Other Data				
间距/极数	Pitch/Poles [mm]/[P]	7.5,7.62/2~24		
剥线长度	Stripping Length [mm]	8~9		
螺丝/扭矩	Screw/Torque(Max)[N.m]	/		
工作温度	Operating temperature[℃]	-40~+105		
焊锡温度	Soldering temperature	/		
引针尺寸	Pin dimensions [mm]	/		
PCB板孔径	PCB Hole Diameter [mm]	/		

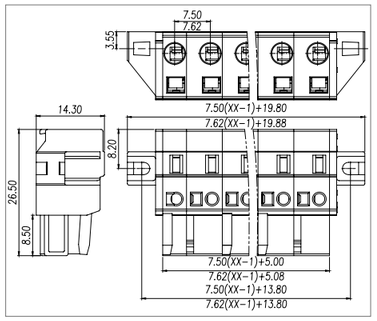

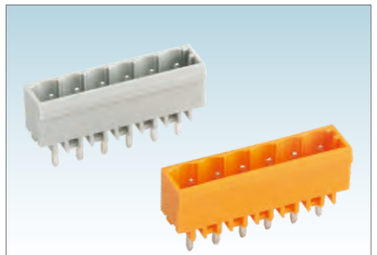

Pitch:5.0/5.08mm

WJ0402/0502-01XX

UL/CUL 技术参数 UL/CUL Technical Data				
等级	Use Group	B	C	D
额定电压	Rated Voltage [V]	300	-	300
额定电流	Rated Current [A]	15	-	10
接线范围 Wire Range	单芯线 Solid [AWG]	/		
	多芯线 Stranded [AWG]	/		
耐电压	Dielectric Voltage-Withstand	1.6KV		
IEC 技术参数 IEC Technical Data				
过电压类别	Overvoltage Category	Ⅲ	Ⅲ	Ⅱ
污染等级	Contamination Class	3	2	2
额定电压	Rated Voltage [V]	320	320	630
额定电流	Rated Current [A]	12	12	12
额定冲击电压	Impulse withstand voltage [KV]	4	4	4
导线截面积 Conductor cross section	硬质导线 Solid[mm²]	/		
	柔性导线 Flexible[mm²]	/		
材料 Material				
绝缘材料	Insulation Material	PA66		
阻燃等级	Flame retardant rating	UL94V-0		
导体材料	Conductor Material	Copper alloy		
导体表面镀层	Plating of conductor surface	Sn plated		
一般参数 Other Data				
间距/极数	Pitch/Poles [mm]/[P]	5.0,5.08/2~24		
剥线长度	Stripping Length [mm]	/		
螺丝/扭矩	Screw/Torque(Max)[N.m]	/		
工作温度	Operating temperature[℃]	-40~+105		
焊锡温度	Soldering temperature	260℃/5S		
引针尺寸	Pin dimensions [mm]	1.0*1.0		
PCB板孔径	PCB Hole Diameter [mm]	∅1.5		

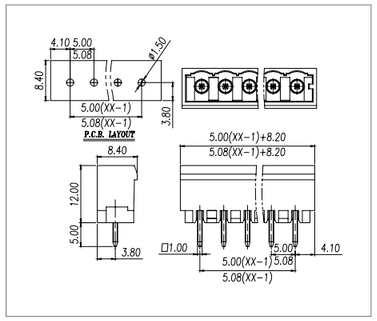

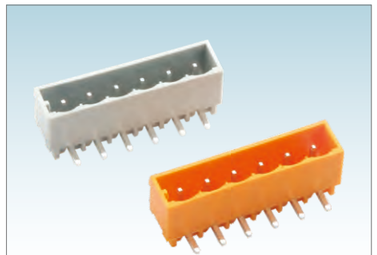

Pitch:5.0/5.08mm

WJ0402/0502-02XX

UL/CUL 技术参数 UL/CUL Technical Data				
等级	Use Group	B	C	D
额定电压	Rated Voltage [V]	300	-	300
额定电流	Rated Current [A]	15	-	10
接线范围 Wire Range	单芯线 Solid [AWG]	/		
	多芯线 Stranded [AWG]	/		
耐电压	Dielectric Voltage-Withstand	1.6KV		
IEC 技术参数 IEC Technical Data				
过电压类别	Overvoltage Category	Ⅲ	Ⅲ	Ⅱ
污染等级	Contamination Class	3	2	2
额定电压	Rated Voltage [V]	320	320	630
额定电流	Rated Current [A]	12	12	12
额定冲击电压	Impulse withstand voltage [KV]	4	4	4
导线截面积 Conductor cross section	硬质导线 Solid[mm²]	/		
	柔性导线 Flexible[mm²]	/		
材料 Material				
绝缘材料	Insulation Material	PA66		
阻燃等级	Flame retardant rating	UL94V-0		
导体材料	Conductor Material	Copper alloy		
导体表面镀层	Plating of conductor surface	Sn plated		
一般参数 Other Data				
间距/极数	Pitch/Poles [mm]/[P]	5.0,5.08/2~24		
剥线长度	Stripping Length [mm]	/		
螺丝/扭矩	Screw/Torque(Max)[N.m]	/		
工作温度	Operating temperature[℃]	-40~+105		
焊锡温度	Soldering temperature	260℃/5S		
引针尺寸	Pin dimensions [mm]	1.0*1.0		
PCB板孔径	PCB Hole Diameter [mm]	∅1.5		

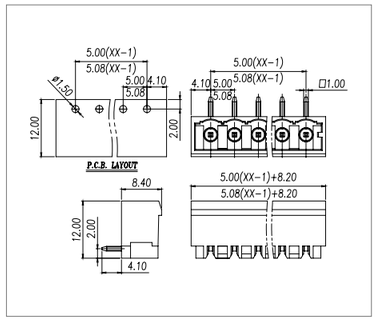

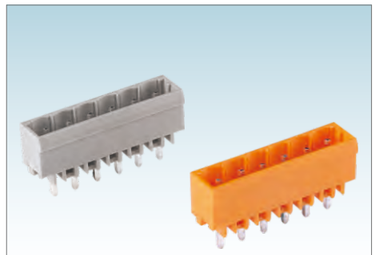

Pitch:5.0/5.08mm

WJ0402/0502-03XX

UL/CUL 技术参数 UL/CUL Technical Data				
等级	Use Group	B	C	D
额定电压	Rated Voltage [V]	300	-	300
额定电流	Rated Current [A]	15	-	10
接线范围 Wire Range	单芯线 Solid [AWG]	/		
	多芯线 Stranded [AWG]	/		
耐电压	Dielectric Voltage-Withstand	1.6KV		
IEC 技术参数 IEC Technical Data				
过电压类别	Overvoltage Category	Ⅲ	Ⅲ	Ⅱ
污染等级	Contamination Class	3	2	2
额定电压	Rated Voltage [V]	250	320	630
额定电流	Rated Current [A]	16	16	16
额定冲击电压	Impulse withstand voltage [KV]	4	4	4
导线截面积 Conductor cross section	硬质导线 Solid[mm²]	/		
	柔性导线 Flexible[mm²]	/		
材料 Material				
绝缘材料	Insulation Material	PA66		
阻燃等级	Flame retardant rating	UL94V-0		
导体材料	Conductor Material	Copper alloy		
导体表面镀层	Plating of conductor surface	Sn plated		
一般参数 Other Data				
间距/极数	Pitch/Poles [mm]/[P]	5.0,5.08/2~24		
剥线长度	Stripping Length [mm]	/		
螺丝/扭矩	Screw/Torque(Max)[N.m]	/		
工作温度	Operating temperature[℃]	-40~+105		
焊锡温度	Soldering temperature	260℃/5S		
引针尺寸	Pin dimensions [mm]	1.2*1.2		
PCB板孔径	PCB Hole Diameter [mm]	∅2.0		

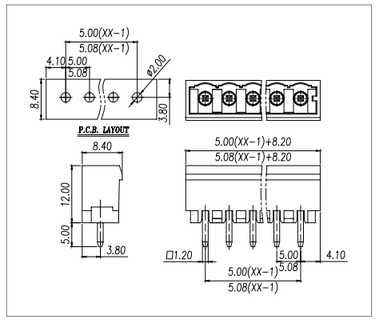

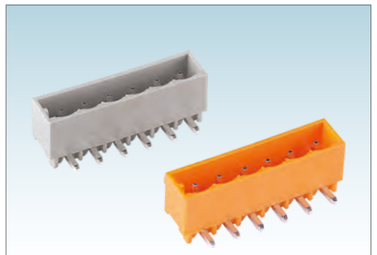

Pitch:5.0/5.08mm

WJ0402/0502-04XX

UL/CUL 技术参数 UL/CUL Technical Data				
等级	Use Group	B	C	D
额定电压	Rated Voltage [V]	300	-	300
额定电流	Rated Current [A]	15	-	10
接线范围 Wire Range	单芯线 Solid [AWG]	/		
	多芯线 Stranded [AWG]	/		
耐电压	Dielectric Voltage-Withstand	1.6KV		
IEC 技术参数 IEC Technical Data				
过电压类别	Overvoltage Category	Ⅲ	Ⅲ	Ⅱ
污染等级	Contamination Class	3	2	2
额定电压	Rated Voltage [V]	250	320	630
额定电流	Rated Current [A]	16	16	16
额定冲击电压	Impulse withstand voltage [KV]	4	4	4
导线截面积 Conductor cross section	硬质导线 Solid[mm²]	/		
	柔性导线 Flexible[mm²]	/		
材料 Material				
绝缘材料	Insulation Material	PA66		
阻燃等级	Flame retardant rating	UL94V-0		
导体材料	Conductor Material	Copper alloy		
导体表面镀层	Plating of conductor surface	Sn plated		
一般参数 Other Data				
间距/极数	Pitch/Poles [mm]/[P]	5.0,5.08/2~24		
剥线长度	Stripping Length [mm]	/		
螺丝/扭矩	Screw/Torque(Max)[N.m]	/		
工作温度	Operating temperature[℃]	-40~+105		
焊锡温度	Soldering temperature	260℃/5S		
引针尺寸	Pin dimensions [mm]	1.2*1.2		
PCB板孔径	PCB Hole Diameter [mm]	∅2.0		

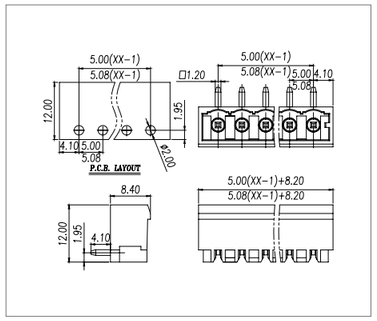

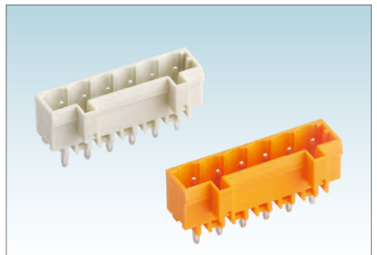

Pitch:5.0/5.08mm

WJ0402/0502-05XX

UL/CUL 技术参数 UL/CUL Technical Data				
等级	Use Group	B	C	D
额定电压	Rated Voltage [V]	300	-	300
额定电流	Rated Current [A]	15	-	10
接线范围 Wire Range	单芯线 Solid [AWG]	/		
	多芯线 Stranded [AWG]	/		
耐电压	Dielectric Voltage-Withstand	1.6KV		
IEC 技术参数 IEC Technical Data				
过电压类别	Overvoltage Category	Ⅲ	Ⅲ	Ⅱ
污染等级	Contamination Class	3	2	2
额定电压	Rated Voltage [V]	320	320	630
额定电流	Rated Current [A]	12	12	12
额定冲击电压	Impulse withstand voltage [KV]	4	4	4
导线截面积 Conductor cross section	硬质导线 Solid[mm²]	/		
	柔性导线 Flexible[mm²]	/		
材料 Material				
绝缘材料	Insulation Material	PA66		
阻燃等级	Flame retardant rating	UL94V-0		
导体材料	Conductor Material	Copper alloy		
导体表面镀层	Plating of conductor surface	Sn plated		
一般参数 Other Data				
间距/极数	Pitch/Poles [mm]/[P]	5.0,5.08/2~24		
剥线长度	Stripping Length [mm]	/		
螺丝/扭矩	Screw/Torque(Max)[N.m]	/		
工作温度	Operating temperature[℃]	-40~+105		
焊锡温度	Soldering temperature	260℃/5S		
引针尺寸	Pin dimensions [mm]	1.0*1.0		
PCB板孔径	PCB Hole Diameter [mm]	∅1.5		

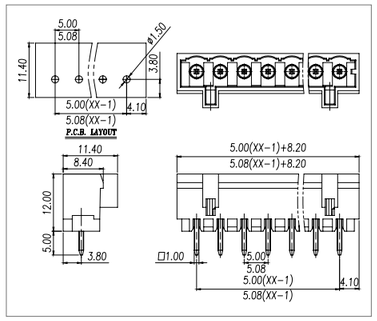

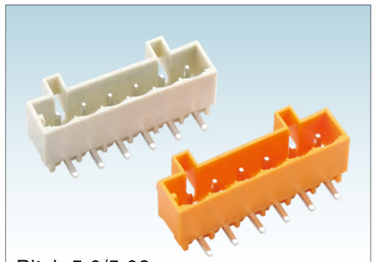

Pitch:5.0/5.08mm

WJ0402/0502-06XX

UL/CUL 技术参数 UL/CUL Technical Data				
等级	Use Group	B	C	D
额定电压	Rated Voltage [V]	300	-	300
额定电流	Rated Current [A]	15	-	10
接线范围 Wire Range	单芯线 Solid [AWG]	/		
	多芯线 Stranded [AWG]	/		
耐电压	Dielectric Voltage-Withstand	1.6KV		
IEC 技术参数 IEC Technical Data				
过电压类别	Overvoltage Category	Ⅲ	Ⅲ	Ⅱ
污染等级	Contamination Class	3	2	2
额定电压	Rated Voltage [V]	300	320	630
额定电流	Rated Current [A]	12	12	12
额定冲击电压	Impulse withstand voltage [KV]	4	4	4
导线截面积 Conductor cross section	硬质导线 Solid[mm²]	/		
	柔性导线 Flexible[mm²]	/		
材料 Material				
绝缘材料	Insulation Material	PA66		
阻燃等级	Flame retardant rating	UL94V-0		
导体材料	Conductor Material	Copper alloy		
导体表面镀层	Plating of conductor surface	Sn plated		
一般参数 Other Data				
间距/极数	Pitch/Poles [mm]/[P]	5.0,5.08/2~24		
剥线长度	Stripping Length [mm]	/		
螺丝/扭矩	Screw/Torque(Max)[N.m]	/		
工作温度	Operating temperature[℃]	-40~+105		
焊锡温度	Soldering temperature	260℃/5S		
引针尺寸	Pin dimensions [mm]	1.0*1.0		
PCB板孔径	PCB Hole Diameter [mm]	∅1.5		

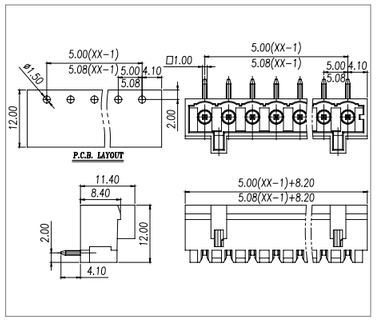

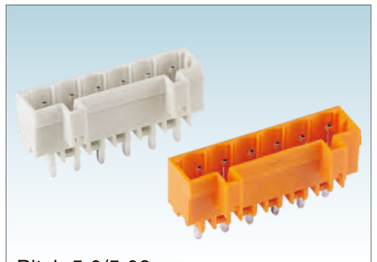

Pitch:5.0/5.08mm

WJ0402/0502-07XX

UL/CUL 技术参数 UL/CUL Technical Data				
等级	Use Group	B	C	D
额定电压	Rated Voltage [V]	300	-	300
额定电流	Rated Current [A]	15	-	10
接线范围 Wire Range	单芯线 Solid [AWG]	/		
	多芯线 Stranded [AWG]	/		
耐电压	Dielectric Voltage-Withstand	1.6KV		
IEC 技术参数 IEC Technical Data				
过电压类别	Overvoltage Category	Ⅲ	Ⅲ	Ⅱ
污染等级	Contamination Class	3	2	2
额定电压	Rated Voltage [V]	250	320	630
额定电流	Rated Current [A]	16	16	16
额定冲击电压	Impulse withstand voltage [KV]	4	4	4
导线截面积 Conductor cross section	硬质导线 Solid[mm²]	/		
	柔性导线 Flexible[mm²]	/		
材料 Material				
绝缘材料	Insulation Material	PA66		
阻燃等级	Flame retardant rating	UL94V-0		
导体材料	Conductor Material	Copper alloy		
导体表面镀层	Plating of conductor surface	Sn plated		
一般参数 Other Data				
间距/极数	Pitch/Poles [mm]/[P]	5.0,5.08/2~24		
剥线长度	Stripping Length [mm]	/		
螺丝/扭矩	Screw/Torque(Max)[N.m]	/		
工作温度	Operating temperature[℃]	-40~+105		
焊锡温度	Soldering temperature	260℃/5S		
引针尺寸	Pin dimensions [mm]	1.2*1.2		
PCB板孔径	PCB Hole Diameter [mm]	∅2.0		

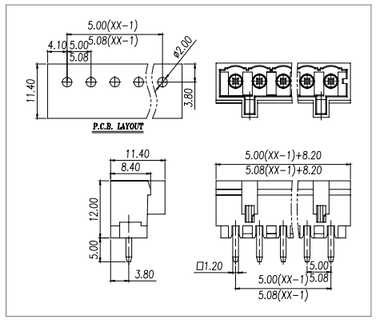



Pitch:5.0/5.08mm

WJ0402/0502-08XX

UL/CUL 技术参数 UL/CUL Technical Data				
等级	Use Group	B	C	D
额定电压	Rated Voltage [V]	300	-	300
额定电流	Rated Current [A]	15	-	10
接线范围 Wire Range	单芯线 Solid [AWG]	/		
	多芯线 Stranded [AWG]	/		
耐电压	Dielectric Voltage-Withstand	1.6KV		
IEC 技术参数 IEC Technical Data				
过电压类别	Overvoltage Category	Ⅲ	Ⅲ	Ⅱ
污染等级	Contamination Class	3	2	2
额定电压	Rated Voltage [V]	250	320	630
额定电流	Rated Current [A]	16	16	16
额定冲击电压	Impulse withstand voltage [KV]	4	4	4
导线截面积 Conductor cross section	硬质导线 Solid[mm²]	/		
	柔性导线 Flexible[mm²]	/		
材料 Material				
绝缘材料	Insulation Material	PA66		
阻燃等级	Flame retardant rating	UL94V-0		
导体材料	Conductor Material	Copper alloy		
导体表面镀层	Plating of conductor surface	Sn plated		
一般参数 Other Data				
间距/极数	Pitch/Poles [mm]/[P]	5.0,5.08/2~24		
剥线长度	Stripping Length [mm]	/		
螺丝/扭矩	Screw/Torque(Max)[N.m]	/		
工作温度	Operating temperature[℃]	-40~+105		
焊锡温度	Soldering temperature	260℃/5S		
引针尺寸	Pin dimensions [mm]	1.2*1.2		
PCB板孔径	PCB Hole Diameter [mm]	∅2.0		

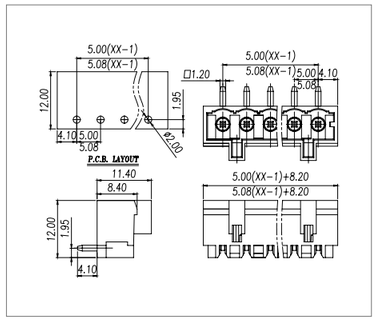



Pitch:7.5/7.62mm

WJ0602/0702-01XX

UL/CUL 技术参数 UL/CUL Technical Data				
等级	Use Group	B	C	D
额定电压	Rated Voltage [V]	300	-	300
额定电流	Rated Current [A]	15	-	10
接线范围 Wire Range	单芯线 Solid [AWG]	/		
	多芯线 Stranded [AWG]	/		
耐电压	Dielectric Voltage-Withstand	1.6KV		
IEC 技术参数 IEC Technical Data				
过电压类别	Overvoltage Category	Ⅲ	Ⅲ	Ⅱ
污染等级	Contamination Class	3	2	2
额定电压	Rated Voltage [V]	300	320	630
额定电流	Rated Current [A]	12	12	12
额定冲击电压	Impulse withstand voltage [KV]	6	6	6
导线截面积 Conductor cross section	硬质导线 Solid[mm²]	/		
	柔性导线 Flexible[mm²]	/		
材料 Material				
绝缘材料	Insulation Material	PA66		
阻燃等级	Flame retardant rating	UL94V-0		
导体材料	Conductor Material	Copper alloy		
导体表面镀层	Plating of conductor surface	Sn plated		
一般参数 Other Data				
间距/极数	Pitch/Poles [mm]/[P]	7.5,7.62/2~24		
剥线长度	Stripping Length [mm]	/		
螺丝/扭矩	Screw/Torque(Max)[N.m]	/		
工作温度	Operating temperature[℃]	-40~+105		
焊锡温度	Soldering temperature	260℃/5S		
引针尺寸	Pin dimensions [mm]	1.0*1.0		
PCB板孔径	PCB Hole Diameter [mm]	∅1.5		

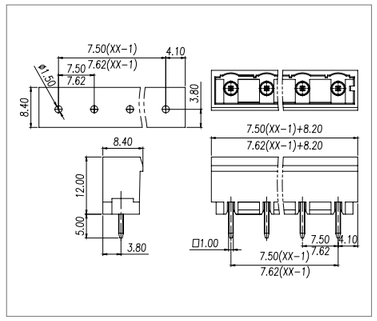



Pitch:7.5/7.62mm

WJ0602/0702-02XX

UL/CUL 技术参数 UL/CUL Technical Data				
等级	Use Group	B	C	D
额定电压	Rated Voltage [V]	300	-	300
额定电流	Rated Current [A]	15	-	10
接线范围 Wire Range	单芯线 Solid [AWG]	/		
	多芯线 Stranded [AWG]	/		
耐电压	Dielectric Voltage-Withstand	1.6KV		
IEC 技术参数 IEC Technical Data				
过电压类别	Overvoltage Category	Ⅲ	Ⅲ	Ⅱ
污染等级	Contamination Class	3	2	2
额定电压	Rated Voltage [V]	300	320	630
额定电流	Rated Current [A]	12	12	12
额定冲击电压	Impulse withstand voltage [KV]	6	6	6
导线截面积 Conductor cross section	硬质导线 Solid[mm²]	/		
	柔性导线 Flexible[mm²]	/		
材料 Material				
绝缘材料	Insulation Material	PA66		
阻燃等级	Flame retardant rating	UL94V-0		
导体材料	Conductor Material	Copper alloy		
导体表面镀层	Plating of conductor surface	Sn plated		
一般参数 Other Data				
间距/极数	Pitch/Poles [mm]/[P]	7.5,7.62/2~24		
剥线长度	Stripping Length [mm]	/		
螺丝/扭矩	Screw/Torque(Max)[N.m]	/		
工作温度	Operating temperature[℃]	-40~+105		
焊锡温度	Soldering temperature	260℃/5S		
引针尺寸	Pin dimensions [mm]	1.0*1.0		
PCB板孔径	PCB Hole Diameter [mm]	∅1.5		

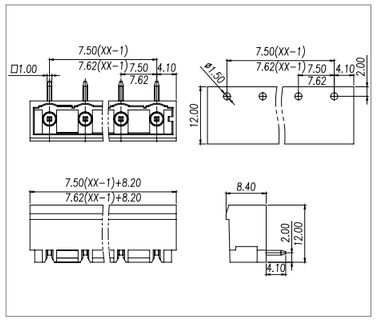

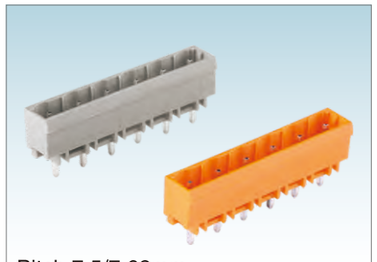

Pitch:7.5/7.62mm

WJ0602/0702-03XX

UL/CUL 技术参数 UL/CUL Technical Data				
等级	Use Group	B	C	D
额定电压	Rated Voltage [V]	300	-	300
额定电流	Rated Current [A]	15	-	10
接线范围 Wire Range	单芯线 Solid [AWG]	/		
	多芯线 Stranded [AWG]	/		
耐电压	Dielectric Voltage-Withstand	1.6KV		
IEC 技术参数 IEC Technical Data				
过电压类别	Overvoltage Category	Ⅲ	Ⅲ	Ⅱ
污染等级	Contamination Class	3	2	2
额定电压	Rated Voltage [V]	250	320	630
额定电流	Rated Current [A]	16	16	16
额定冲击电压	Impulse withstand voltage [KV]	6	6	6
导线截面积 Conductor cross section	硬质导线 Solid[mm²]	/		
	柔性导线 Flexible[mm²]	/		
材料 Material				
绝缘材料	Insulation Material	PA66		
阻燃等级	Flame retardant rating	UL94V-0		
导体材料	Conductor Material	Copper alloy		
导体表面镀层	Plating of conductor surface	Sn plated		
一般参数 Other Data				
间距/极数	Pitch/Poles [mm]/[P]	7.5,7.62/2~24		
剥线长度	Stripping Length [mm]	/		
螺丝/扭矩	Screw/Torque(Max)[N.m]	/		
工作温度	Operating temperature[℃]	-40~+105		
焊锡温度	Soldering temperature	260℃/5S		
引针尺寸	Pin dimensions [mm]	1.2*1.2		
PCB板孔径	PCB Hole Diameter [mm]	∅2.0		

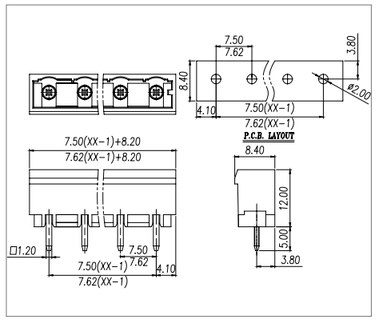

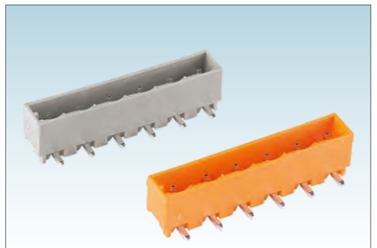

Pitch:7.5/7.62mm

WJ0602/0702-04XX

UL/CUL 技术参数 UL/CUL Technical Data				
等级	Use Group	B	C	D
额定电压	Rated Voltage [V]	300	-	300
额定电流	Rated Current [A]	15	-	10
接线范围 Wire Range	单芯线 Solid [AWG]	/		
	多芯线 Stranded [AWG]	/		
耐电压	Dielectric Voltage-Withstand	1.6KV		

IEC 技术参数 IEC Technical Data				
过电压类别	Overvoltage Category	Ⅲ	Ⅲ	Ⅱ
污染等级	Contamination Class	3	2	2
额定电压	Rated Voltage [V]	250	320	630
额定电流	Rated Current [A]	16	16	16
额定冲击电压	Impulse withstand voltage [KV]	6	6	6
导线截面积 Conductor cross section	硬质导线 Solid[mm²]	/		
	柔性导线 Flexible[mm²]	/		

材料 Material		
绝缘材料	Insulation Material	PA66
阻燃等级	Flame retardant rating	UL94V-0
导体材料	Conductor Material	Copper alloy
导体表面镀层	Plating of conductor surface	Sn plated

一般参数 Other Data		
间距/极数	Pitch/Poles [mm]/[P]	7.5,7.62/2~24
剥线长度	Stripping Length [mm]	/
螺丝/扭矩	Screw/Torque(Max)[N.m]	/
工作温度	Operating temperature[℃]	-40~+105
焊锡温度	Soldering temperature	260℃/5S
引针尺寸	Pin dimensions [mm]	1.2*1.2
PCB板孔径	PCB Hole Diameter [mm]	∅2.0

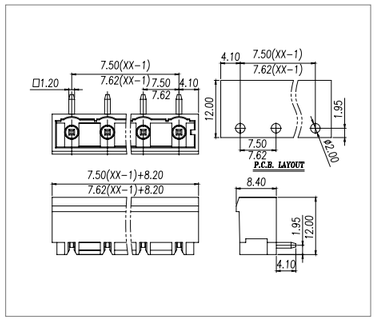

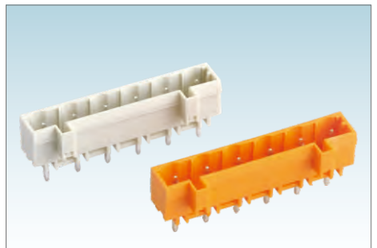

Pitch:7.5/7.62mm

WJ0602/0702-05XX

UL/CUL 技术参数 UL/CUL Technical Data				
等级	Use Group	B	C	D
额定电压	Rated Voltage [V]	300	-	300
额定电流	Rated Current [A]	15	-	10
接线范围 Wire Range	单芯线 Solid [AWG]	/		
	多芯线 Stranded [AWG]	/		
耐电压	Dielectric Voltage-Withstand	1.6KV		

IEC 技术参数 IEC Technical Data				
过电压类别	Overvoltage Category	Ⅲ	Ⅲ	Ⅱ
污染等级	Contamination Class	3	2	2
额定电压	Rated Voltage [V]	300	320	630
额定电流	Rated Current [A]	12	12	12
额定冲击电压	Impulse withstand voltage [KV]	6	6	6
导线截面积 Conductor cross section	硬质导线 Solid[mm²]	/		
	柔性导线 Flexible[mm²]	/		

材料 Material		
绝缘材料	Insulation Material	PA66
阻燃等级	Flame retardant rating	UL94V-0
导体材料	Conductor Material	Copper alloy
导体表面镀层	Plating of conductor surface	Sn plated

一般参数 Other Data		
间距/极数	Pitch/Poles [mm]/[P]	7.5,7.62/2~24
剥线长度	Stripping Length [mm]	/
螺丝/扭矩	Screw/Torque(Max)[N.m]	/
工作温度	Operating temperature[℃]	-40~+105
焊锡温度	Soldering temperature	260℃/5S
引针尺寸	Pin dimensions [mm]	1.0*1.0
PCB板孔径	PCB Hole Diameter [mm]	∅1.5

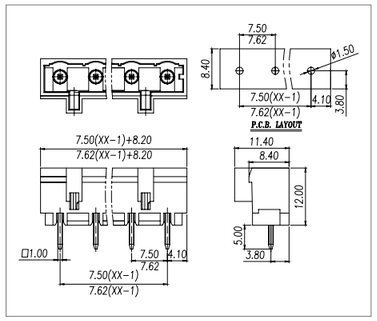

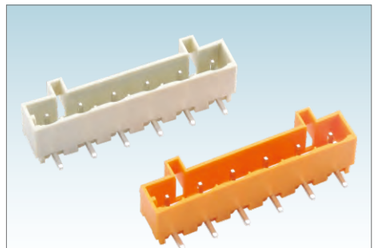

Pitch:7.5/7.62mm

WJ0602/0702-06XX

UL/CUL 技术参数 UL/CUL Technical Data				
等级	Use Group	B	C	D
额定电压	Rated Voltage [V]	300	-	300
额定电流	Rated Current [A]	15	-	10
接线范围 Wire Range	单芯线 Solid [AWG]	/		
	多芯线 Stranded [AWG]	/		
耐电压	Dielectric Voltage-Withstand	1.6KV		

IEC 技术参数 IEC Technical Data				
过电压类别	Overvoltage Category	Ⅲ	Ⅲ	Ⅱ
污染等级	Contamination Class	3	2	2
额定电压	Rated Voltage [V]	300	320	630
额定电流	Rated Current [A]	12	12	12
额定冲击电压	Impulse withstand voltage [KV]	6	6	6
导线截面积 Conductor cross section	硬质导线 Solid[mm²]	/		
	柔性导线 Flexible[mm²]	/		

材料 Material		
绝缘材料	Insulation Material	PA66
阻燃等级	Flame retardant rating	UL94V-0
导体材料	Conductor Material	Copper alloy
导体表面镀层	Plating of conductor surface	Sn plated

一般参数 Other Data		
间距/极数	Pitch/Poles [mm]/[P]	7.5,7.62/2~24
剥线长度	Stripping Length [mm]	/
螺丝/扭矩	Screw/Torque(Max)[N.m]	/
工作温度	Operating temperature[℃]	-40~+105
焊锡温度	Soldering temperature	260℃/5S
引针尺寸	Pin dimensions [mm]	1.0*1.0
PCB板孔径	PCB Hole Diameter [mm]	∅1.5

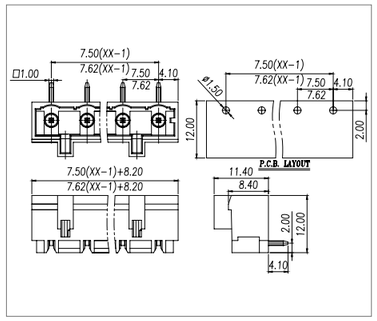

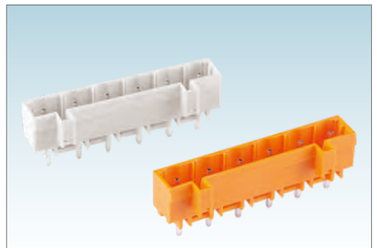

Pitch:7.5/7.62mm

WJ0602/0702-07XX

UL/CUL 技术参数 UL/CUL Technical Data				
等级	Use Group	B	C	D
额定电压	Rated Voltage [V]	300	-	300
额定电流	Rated Current [A]	15	-	10
接线范围 Wire Range	单芯线 Solid [AWG]	/		
	多芯线 Stranded [AWG]	/		
耐电压	Dielectric Voltage-Withstand	1.6KV		

IEC 技术参数 IEC Technical Data				
过电压类别	Overvoltage Category	Ⅲ	Ⅲ	Ⅱ
污染等级	Contamination Class	3	2	2
额定电压	Rated Voltage [V]	250	320	630
额定电流	Rated Current [A]	16	16	16
额定冲击电压	Impulse withstand voltage [KV]	6	6	6
导线截面积 Conductor cross section	硬质导线 Solid[mm²]	/		
	柔性导线 Flexible[mm²]	/		

材料 Material		
绝缘材料	Insulation Material	PA66
阻燃等级	Flame retardant rating	UL94V-0
导体材料	Conductor Material	Copper alloy
导体表面镀层	Plating of conductor surface	Sn plated

一般参数 Other Data		
间距/极数	Pitch/Poles [mm]/[P]	7.5,7.62/2~24
剥线长度	Stripping Length [mm]	/
螺丝/扭矩	Screw/Torque(Max)[N.m]	/
工作温度	Operating temperature[℃]	-40~+105
焊锡温度	Soldering temperature	260℃/5S
引针尺寸	Pin dimensions [mm]	1.2*1.2
PCB板孔径	PCB Hole Diameter [mm]	∅2.0

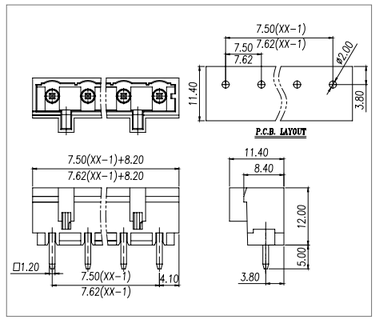

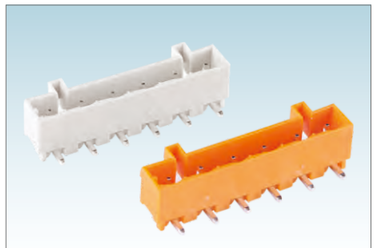

Pitch:7.5/7.62mm

WJ0602/0702-08XX

UL/CUL 技术参数 UL/CUL Technical Data				
等级	Use Group	B	C	D
额定电压	Rated Voltage [V]	300	-	300
额定电流	Rated Current [A]	15	-	10
接线范围 Wire Range	单芯线 Solid [AWG]	/		
	多芯线 Stranded [AWG]	/		
耐电压	Dielectric Voltage-Withstand	1.6KV		

IEC 技术参数 IEC Technical Data				
过电压类别	Overvoltage Category	Ⅲ	Ⅲ	Ⅱ
污染等级	Contamination Class	3	2	2
额定电压	Rated Voltage [V]	250	320	630
额定电流	Rated Current [A]	16	16	16
额定冲击电压	Impulse withstand voltage [KV]	6	6	6
导线截面积 Conductor cross section	硬质导线 Solid[mm²]	/		
	柔性导线 Flexible[mm²]	/		

材料 Material		
绝缘材料	Insulation Material	PA66
阻燃等级	Flame retardant rating	UL94V-0
导体材料	Conductor Material	Copper alloy
导体表面镀层	Plating of conductor surface	Sn plated

一般参数 Other Data		
间距/极数	Pitch/Poles [mm]/[P]	7.5,7.62/2~24
剥线长度	Stripping Length [mm]	/
螺丝/扭矩	Screw/Torque(Max)[N.m]	/
工作温度	Operating temperature[℃]	-40~+105
焊锡温度	Soldering temperature	260℃/5S
引针尺寸	Pin dimensions [mm]	1.2*1.2
PCB板孔径	PCB Hole Diameter [mm]	∅2.0

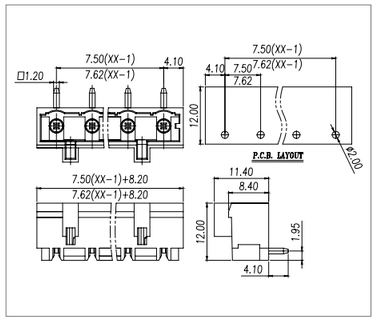

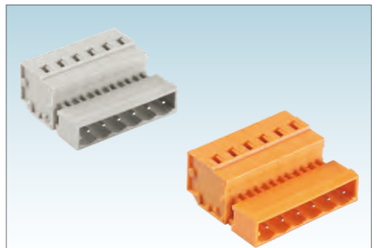

Pitch:5.0/5.08mm

WJ0403/0503-01XX

UL/CUL 技术参数 UL/CUL Technical Data				
等级	Use Group	B	C	D
额定电压	Rated Voltage [V]	300	-	300
额定电流	Rated Current [A]	15	-	10
接线范围 Wire Range	单芯线 Solid [AWG]	28~12		
	多芯线 Stranded [AWG]	28~12		
耐电压	Dielectric Voltage-Withstand	1.6KV		

IEC 技术参数 IEC Technical Data				
过电压类别	Overvoltage Category	Ⅲ	Ⅲ	Ⅱ
污染等级	Contamination Class	3	2	2
额定电压	Rated Voltage [V]	320	320	630
额定电流	Rated Current [A]	12	12	12
额定冲击电压	Impulse withstand voltage [KV]	4	4	4
导线截面积 Conductor cross section	硬质导线 Solid[mm²]	0.25~2.5		
	柔性导线 Flexible[mm²]	0.25~2.5		

材料 Material		
绝缘材料	Insulation Material	PA66
阻燃等级	Flame retardant rating	UL94V-0
导体材料	Conductor Material	Copper alloy
导体表面镀层	Plating of conductor surface	Sn plated

一般参数 Other Data		
间距/极数	Pitch/Poles [mm]/[P]	5.0,5.08/2~24
剥线长度	Stripping Length [mm]	8~9
螺丝/扭矩	Screw/Torque(Max)[N.m]	/
工作温度	Operating temperature[℃]	-40~+105
焊锡温度	Soldering temperature	/
引针尺寸	Pin dimensions [mm]	/
PCB板孔径	PCB Hole Diameter [mm]	/

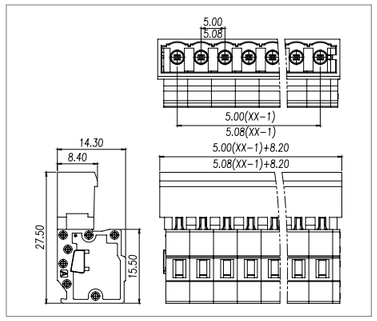

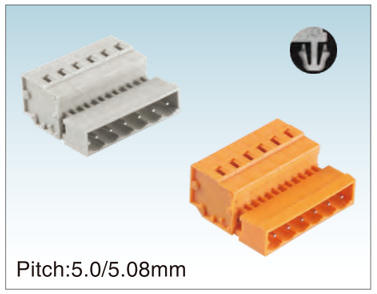

Pitch:5.0/5.08mm

WJ0403/0503-02XX

UL/CUL 技术参数 UL/CUL Technical Data				
等级	Use Group	B	C	D
额定电压	Rated Voltage [V]	300	-	300
额定电流	Rated Current [A]	15	-	10
接线范围 Wire Range	单芯线 Solid [AWG]	28~12		
	多芯线 Stranded [AWG]	28~12		
耐电压	Dielectric Voltage-Withstand	1.6KV		

IEC 技术参数 IEC Technical Data				
过电压类别	Overvoltage Category	Ⅲ	Ⅲ	Ⅱ
污染等级	Contamination Class	3	2	2
额定电压	Rated Voltage [V]	320	320	630
额定电流	Rated Current [A]	12	12	12
额定冲击电压	Impulse withstand voltage [KV]	4	4	4
导线截面积 Conductor cross section	硬质导线 Solid[mm²]	0.25~2.5		
	柔性导线 Flexible[mm²]	0.25~2.5		

材料 Material		
绝缘材料	Insulation Material	PA66
阻燃等级	Flame retardant rating	UL94V-0
导体材料	Conductor Material	Copper alloy
导体表面镀层	Plating of conductor surface	Sn plated

一般参数 Other Data		
间距/极数	Pitch/Poles [mm]/[P]	5.0,5.08/2~24
剥线长度	Stripping Length [mm]	8~9
螺丝/扭矩	Screw/Torque(Max)[N.m]	/
工作温度	Operating temperature[℃]	-40~+105
焊锡温度	Soldering temperature	/
引针尺寸	Pin dimensions [mm]	/
PCB板孔径	PCB Hole Diameter [mm]	/

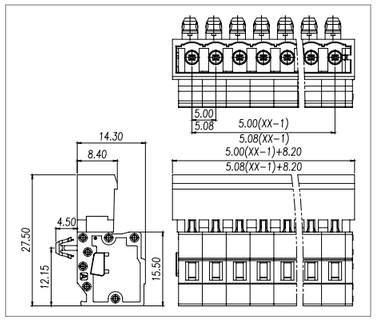

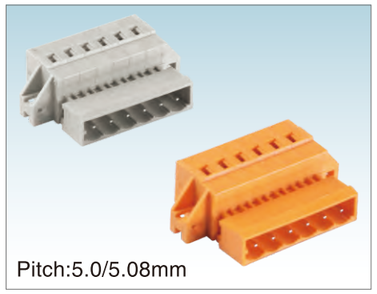

Pitch:5.0/5.08mm

WJ0403/0503-03XX

UL/CUL 技术参数 UL/CUL Technical Data				
等级	Use Group	B	C	D
额定电压	Rated Voltage [V]	300	-	300
额定电流	Rated Current [A]	15	-	10
接线范围 Wire Range	单芯线 Solid [AWG]	28~12		
	多芯线 Stranded [AWG]	28~12		
耐电压	Dielectric Voltage-Withstand	1.6KV		

IEC 技术参数 IEC Technical Data				
过电压类别	Overvoltage Category	Ⅲ	Ⅲ	Ⅱ
污染等级	Contamination Class	3	2	2
额定电压	Rated Voltage [V]	320	320	630
额定电流	Rated Current [A]	12	12	12
额定冲击电压	Impulse withstand voltage [KV]	4	4	4
导线截面积 Conductor cross section	硬质导线 Solid[mm²]	0.25~2.5		
	柔性导线 Flexible[mm²]	0.25~2.5		

材料 Material		
绝缘材料	Insulation Material	PA66
阻燃等级	Flame retardant rating	UL94V-0
导体材料	Conductor Material	Copper alloy
导体表面镀层	Plating of conductor surface	Sn plated

一般参数 Other Data		
间距/极数	Pitch/Poles [mm]/[P]	5.0,5.08/2~24
剥线长度	Stripping Length [mm]	8~9
螺丝/扭矩	Screw/Torque(Max)[N.m]	/
工作温度	Operating temperature[℃]	-40~+105
焊锡温度	Soldering temperature	/
引针尺寸	Pin dimensions [mm]	/
PCB板孔径	PCB Hole Diameter [mm]	/

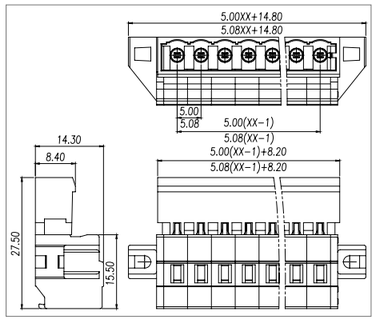

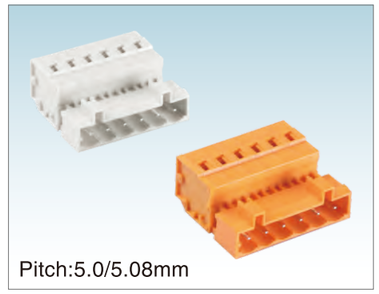

Pitch:5.0/5.08mm

WJ0403/0503-04XX

UL/CUL 技术参数 UL/CUL Technical Data				
等级	Use Group	B	C	D
额定电压	Rated Voltage [V]	300	-	300
额定电流	Rated Current [A]	15	-	10
接线范围 Wire Range	单芯线 Solid [AWG]	28~12		
	多芯线 Stranded [AWG]	28~12		
耐电压	Dielectric Voltage-Withstand	1.6KV		

IEC 技术参数 IEC Technical Data				
过电压类别	Overvoltage Category	Ⅲ	Ⅲ	Ⅱ
污染等级	Contamination Class	3	2	2
额定电压	Rated Voltage [V]	320	320	630
额定电流	Rated Current [A]	12	12	12
额定冲击电压	Impulse withstand voltage [KV]	4	4	4
导线截面积 Conductor cross section	硬质导线 Solid[mm²]	0.25~2.5		
	柔性导线 Flexible[mm²]	0.25~2.5		

材料 Material		
绝缘材料	Insulation Material	PA66
阻燃等级	Flame retardant rating	UL94V-0
导体材料	Conductor Material	Copper alloy
导体表面镀层	Plating of conductor surface	Sn plated

一般参数 Other Data		
间距/极数	Pitch/Poles [mm]/[P]	5.0,5.08/2~24
剥线长度	Stripping Length [mm]	8~9
螺丝/扭矩	Screw/Torque(Max)[N.m]	/
工作温度	Operating temperature[℃]	-40~+105
焊锡温度	Soldering temperature	/
引针尺寸	Pin dimensions [mm]	/
PCB板孔径	PCB Hole Diameter [mm]	/

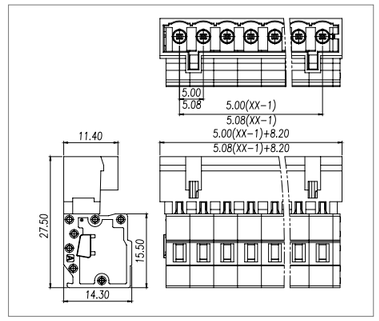

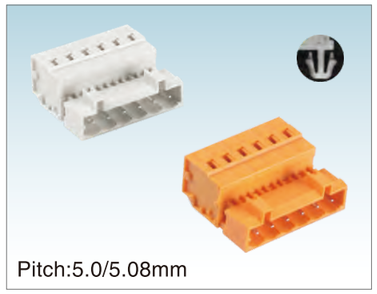

Pitch:5.0/5.08mm

WJ0403/0503-05XX

UL/CUL 技术参数 UL/CUL Technical Data				
等级	Use Group	B	C	D
额定电压	Rated Voltage [V]	300	-	300
额定电流	Rated Current [A]	15	-	10
接线范围 Wire Range	单芯线 Solid [AWG]	28~12		
	多芯线 Stranded [AWG]	28~12		
耐电压	Dielectric Voltage-Withstand	1.6KV		

IEC 技术参数 IEC Technical Data				
过电压类别	Overvoltage Category	Ⅲ	Ⅲ	Ⅱ
污染等级	Contamination Class	3	2	2
额定电压	Rated Voltage [V]	320	320	630
额定电流	Rated Current [A]	12	12	12
额定冲击电压	Impulse withstand voltage [KV]	4	4	4
导线截面积 Conductor cross section	硬质导线 Solid[mm²]	0.25~2.5		
	柔性导线 Flexible[mm²]	0.25~2.5		

材料 Material		
绝缘材料	Insulation Material	PA66
阻燃等级	Flame retardant rating	UL94V-0
导体材料	Conductor Material	Copper alloy
导体表面镀层	Plating of conductor surface	Sn plated

一般参数 Other Data		
间距/极数	Pitch/Poles [mm]/[P]	5.0,5.08/2~24
剥线长度	Stripping Length [mm]	8~9
螺丝/扭矩	Screw/Torque(Max)[N.m]	/
工作温度	Operating temperature[℃]	-40~+105
焊锡温度	Soldering temperature	/
引针尺寸	Pin dimensions [mm]	/
PCB板孔径	PCB Hole Diameter [mm]	/

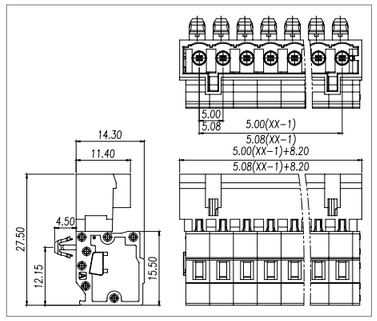

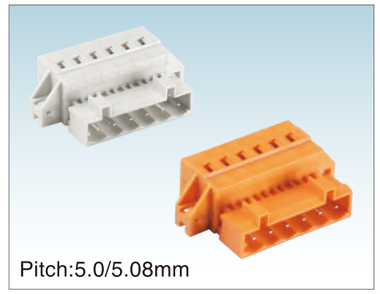

Pitch:5.0/5.08mm

WJ0403/0503-06XX

UL/CUL 技术参数 UL/CUL Technical Data				
等级	Use Group	B	C	D
额定电压	Rated Voltage [V]	300	-	300
额定电流	Rated Current [A]	15	-	10
接线范围 Wire Range	单芯线 Solid [AWG]	28~12		
	多芯线 Stranded [AWG]	28~12		
耐电压	Dielectric Voltage-Withstand	1.6KV		

IEC 技术参数 IEC Technical Data				
过电压类别	Overvoltage Category	Ⅲ	Ⅲ	Ⅱ
污染等级	Contamination Class	3	2	2
额定电压	Rated Voltage [V]	320	320	630
额定电流	Rated Current [A]	12	12	12
额定冲击电压	Impulse withstand voltage [KV]	4	4	4
导线截面积 Conductor cross section	硬质导线 Solid[mm²]	0.25~2.5		
	柔性导线 Flexible[mm²]	0.25~2.5		

材料 Material		
绝缘材料	Insulation Material	PA66
阻燃等级	Flame retardant rating	UL94V-0
导体材料	Conductor Material	Copper alloy
导体表面镀层	Plating of conductor surface	Sn plated

一般参数 Other Data		
间距/极数	Pitch/Poles [mm]/[P]	5.0,5.08/2~24
剥线长度	Stripping Length [mm]	8~9
螺丝/扭矩	Screw/Torque(Max)[N.m]	/
工作温度	Operating temperature[℃]	-40~+105
焊锡温度	Soldering temperature	/
引针尺寸	Pin dimensions [mm]	/
PCB板孔径	PCB Hole Diameter [mm]	/

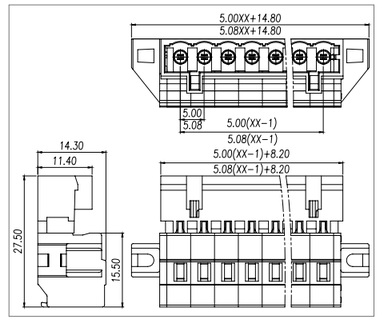

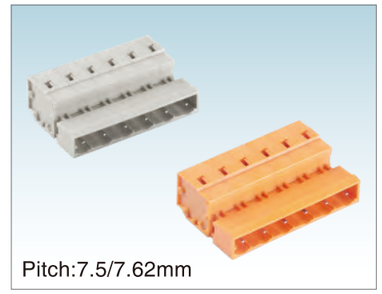

Pitch:7.5/7.62mm

WJ0603/0703-01XX

UL/CUL 技术参数 UL/CUL Technical Data				
等级	Use Group	B	C	D
额定电压	Rated Voltage [V]	300	-	300
额定电流	Rated Current [A]	15	-	10
接线范围 Wire Range	单芯线 Solid [AWG]	28~12		
	多芯线 Stranded [AWG]	28~12		
耐电压	Dielectric Voltage-Withstand	1.6KV		

IEC 技术参数 IEC Technical Data				
过电压类别	Overvoltage Category	Ⅲ	Ⅲ	Ⅱ
污染等级	Contamination Class	3	2	2
额定电压	Rated Voltage [V]	320	320	630
额定电流	Rated Current [A]	12	12	12
额定冲击电压	Impulse withstand voltage [KV]	6	6	6
导线截面积 Conductor cross section	硬质导线 Solid[mm²]	0.25~2.5		
	柔性导线 Flexible[mm²]	0.25~2.5		

材料 Material		
绝缘材料	Insulation Material	PA66
阻燃等级	Flame retardant rating	UL94V-0
导体材料	Conductor Material	Copper alloy
导体表面镀层	Plating of conductor surface	Sn plated

一般参数 Other Data		
间距/极数	Pitch/Poles [mm]/[P]	7.5,7.62/2~24
剥线长度	Stripping Length [mm]	8~9
螺丝/扭矩	Screw/Torque(Max)[N.m]	/
工作温度	Operating temperature[℃]	-40~+105
焊锡温度	Soldering temperature	/
引针尺寸	Pin dimensions [mm]	/
PCB板孔径	PCB Hole Diameter [mm]	/

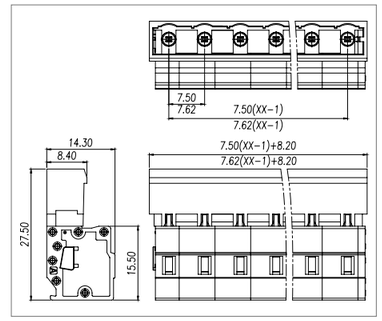

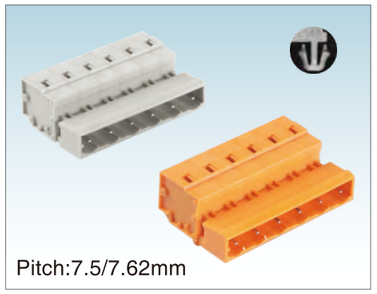

WJ0603/0703-02XX

UL/CUL 技术参数 UL/CUL Technical Data				
等级	Use Group	B	C	D
额定电压	Rated Voltage [V]	300	-	300
额定电流	Rated Current [A]	15	-	10
接线范围 Wire Range	单芯线 Solid [AWG]	28~12		
	多芯线 Stranded [AWG]	28~12		
耐电压	Dielectric Voltage-Withstand	1.6KV		

IEC 技术参数 IEC Technical Data				
过电压类别	Overvoltage Category	Ⅲ	Ⅲ	Ⅱ
污染等级	Contamination Class	3	2	2
额定电压	Rated Voltage [V]	320	320	630
额定电流	Rated Current [A]	12	12	12
额定冲击电压	Impulse withstand voltage [KV]	6	6	6
导线截面积 Conductor cross section	硬质导线 Solid[mm²]	0.25~2.5		
	柔性导线 Flexible[mm²]	0.25~2.5		

材料 Material		
绝缘材料	Insulation Material	PA66
阻燃等级	Flame retardant rating	UL94V-0
导体材料	Conductor Material	Copper alloy
导体表面镀层	Plating of conductor surface	Sn plated

一般参数 Other Data		
间距/极数	Pitch/Poles [mm]/[P]	7.5,7.62/2~24
剥线长度	Stripping Length [mm]	8~9
螺丝/扭矩	Screw/Torque(Max)[N.m]	/
工作温度	Operating temperature[℃]	-40~+105
焊锡温度	Soldering temperature	/
引针尺寸	Pin dimensions [mm]	/
PCB板孔径	PCB Hole Diameter [mm]	/

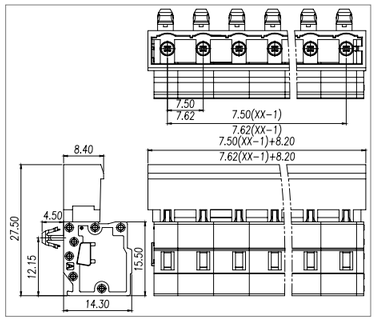

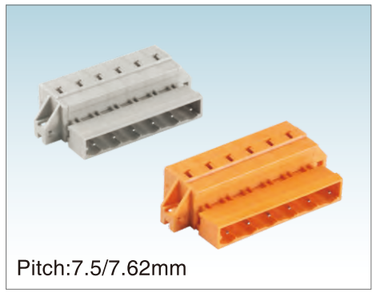

WJ0603/0703-03XX

UL/CUL 技术参数 UL/CUL Technical Data				
等级	Use Group	B	C	D
额定电压	Rated Voltage [V]	300	-	300
额定电流	Rated Current [A]	15	-	10
接线范围 Wire Range	单芯线 Solid [AWG]	28~12		
	多芯线 Stranded [AWG]	28~12		
耐电压	Dielectric Voltage-Withstand	1.6KV		

IEC 技术参数 IEC Technical Data				
过电压类别	Overvoltage Category	Ⅲ	Ⅲ	Ⅱ
污染等级	Contamination Class	3	2	2
额定电压	Rated Voltage [V]	320	320	630
额定电流	Rated Current [A]	12	12	12
额定冲击电压	Impulse withstand voltage [KV]	6	6	6
导线截面积 Conductor cross section	硬质导线 Solid[mm²]	0.25~2.5		
	柔性导线 Flexible[mm²]	0.25~2.5		

材料 Material		
绝缘材料	Insulation Material	PA66
阻燃等级	Flame retardant rating	UL94V-0
导体材料	Conductor Material	Copper alloy
导体表面镀层	Plating of conductor surface	Sn plated

一般参数 Other Data		
间距/极数	Pitch/Poles [mm]/[P]	7.5,7.62/2~24
剥线长度	Stripping Length [mm]	8~9
螺丝/扭矩	Screw/Torque(Max)[N.m]	/
工作温度	Operating temperature[℃]	-40~+105
焊锡温度	Soldering temperature	/
引针尺寸	Pin dimensions [mm]	/
PCB板孔径	PCB Hole Diameter [mm]	/

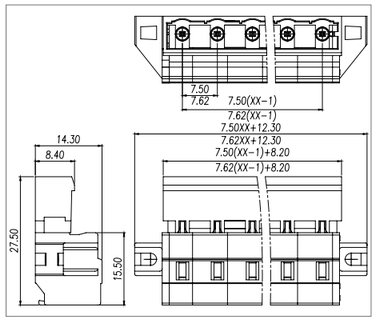

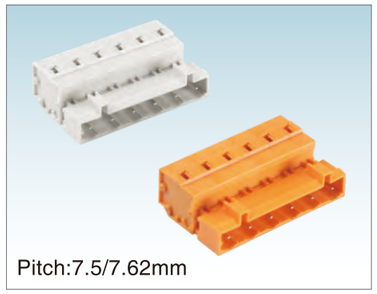

WJ0603/0703-04XX

UL/CUL 技术参数 UL/CUL Technical Data				
等级	Use Group	B	C	D
额定电压	Rated Voltage [V]	300	-	300
额定电流	Rated Current [A]	15	-	10
接线范围 Wire Range	单芯线 Solid [AWG]	28~12		
	多芯线 Stranded [AWG]	28~12		
耐电压	Dielectric Voltage-Withstand	1.6KV		

IEC 技术参数 IEC Technical Data				
过电压类别	Overvoltage Category	Ⅲ	Ⅲ	Ⅱ
污染等级	Contamination Class	3	2	2
额定电压	Rated Voltage [V]	320	320	630
额定电流	Rated Current [A]	12	12	12
额定冲击电压	Impulse withstand voltage [KV]	6	6	6
导线截面积 Conductor cross section	硬质导线 Solid[mm²]	0.25~2.5		
	柔性导线 Flexible[mm²]	0.25~2.5		

材料 Material		
绝缘材料	Insulation Material	PA66
阻燃等级	Flame retardant rating	UL94V-0
导体材料	Conductor Material	Copper alloy
导体表面镀层	Plating of conductor surface	Sn plated

一般参数 Other Data		
间距/极数	Pitch/Poles [mm]/[P]	7.5,7.62/2~24
剥线长度	Stripping Length [mm]	8~9
螺丝/扭矩	Screw/Torque(Max)[N.m]	/
工作温度	Operating temperature[℃]	-40~+105
焊锡温度	Soldering temperature	/
引针尺寸	Pin dimensions [mm]	/
PCB板孔径	PCB Hole Diameter [mm]	/

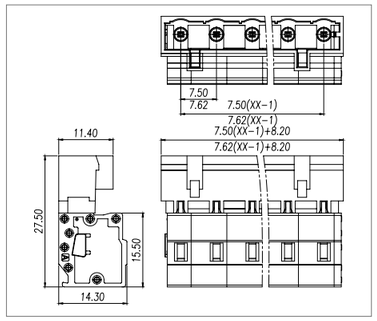

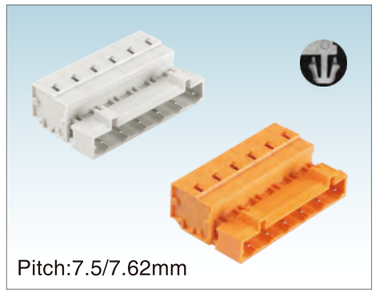

WJ0603/0703-05XX

UL/CUL 技术参数 UL/CUL Technical Data				
等级	Use Group	B	C	D
额定电压	Rated Voltage [V]	300	-	300
额定电流	Rated Current [A]	15	-	10
接线范围 Wire Range	单芯线 Solid [AWG]	28~12		
	多芯线 Stranded [AWG]	28~12		
耐电压	Dielectric Voltage-Withstand	1.6KV		

IEC 技术参数 IEC Technical Data				
过电压类别	Overvoltage Category	Ⅲ	Ⅲ	Ⅱ
污染等级	Contamination Class	3	2	2
额定电压	Rated Voltage [V]	320	320	630
额定电流	Rated Current [A]	12	12	12
额定冲击电压	Impulse withstand voltage [KV]	6	6	6
导线截面积 Conductor cross section	硬质导线 Solid[mm²]	0.25~2.5		
	柔性导线 Flexible[mm²]	0.25~2.5		

材料 Material		
绝缘材料	Insulation Material	PA66
阻燃等级	Flame retardant rating	UL94V-0
导体材料	Conductor Material	Copper alloy
导体表面镀层	Plating of conductor surface	Sn plated

一般参数 Other Data		
间距/极数	Pitch/Poles [mm]/[P]	7.5,7.62/2~24
剥线长度	Stripping Length [mm]	8~9
螺丝/扭矩	Screw/Torque(Max)[N.m]	/
工作温度	Operating temperature[℃]	-40~+105
焊锡温度	Soldering temperature	/
引针尺寸	Pin dimensions [mm]	/
PCB板孔径	PCB Hole Diameter [mm]	/

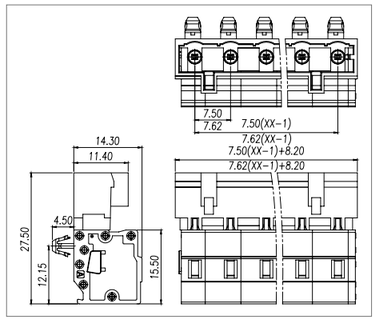

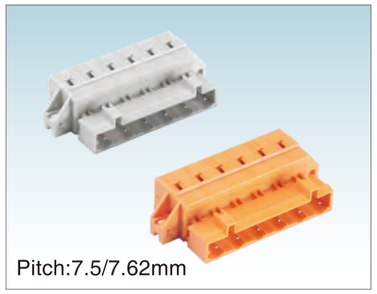

WJ0603/0703-06XX

UL/CUL 技术参数 UL/CUL Technical Data				
等级	Use Group	B	C	D
额定电压	Rated Voltage [V]	300	-	300
额定电流	Rated Current [A]	15	-	10
接线范围 Wire Range	单芯线 Solid [AWG]	28~12		
	多芯线 Stranded [AWG]	28~12		
耐电压	Dielectric Voltage-Withstand	1.6KV		

IEC 技术参数 IEC Technical Data				
过电压类别	Overvoltage Category	Ⅲ	Ⅲ	Ⅱ
污染等级	Contamination Class	3	2	2
额定电压	Rated Voltage [V]	320	320	630
额定电流	Rated Current [A]	12	12	12
额定冲击电压	Impulse withstand voltage [KV]	6	6	6
导线截面积 Conductor cross section	硬质导线 Solid[mm²]	0.25~2.5		
	柔性导线 Flexible[mm²]	0.25~2.5		

材料 Material		
绝缘材料	Insulation Material	PA66
阻燃等级	Flame retardant rating	UL94V-0
导体材料	Conductor Material	Copper alloy
导体表面镀层	Plating of conductor surface	Sn plated

一般参数 Other Data		
间距/极数	Pitch/Poles [mm]/[P]	7.5,7.62/2~24
剥线长度	Stripping Length [mm]	8~9
螺丝/扭矩	Screw/Torque(Max)[N.m]	/
工作温度	Operating temperature[℃]	-40~+105
焊锡温度	Soldering temperature	/
引针尺寸	Pin dimensions [mm]	/
PCB板孔径	PCB Hole Diameter [mm]	/

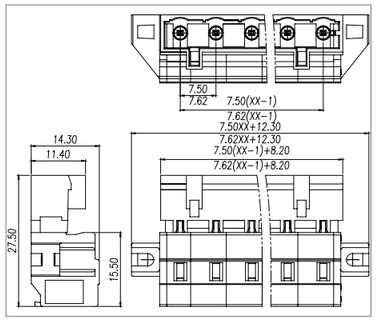

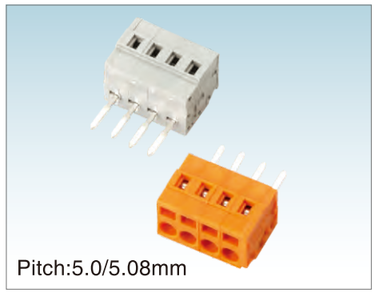

WJ0404/0504-01XX

UL/CUL 技术参数 UL/CUL Technical Data				
等级	Use Group	B	C	D
额定电压	Rated Voltage [V]	300	150	300
额定电流	Rated Current [A]	15	15	10
接线范围 Wire Range	单芯线 Solid [AWG]	28~12		
	多芯线 Stranded [AWG]	28~12		
耐电压	Dielectric Voltage-Withstand	1.6KV		

IEC 技术参数 IEC Technical Data				
过电压类别	Overvoltage Category	Ⅲ	Ⅲ	Ⅱ
污染等级	Contamination Class	3	2	2
额定电压	Rated Voltage [V]	320	320	630
额定电流	Rated Current [A]	12	12	12
额定冲击电压	Impulse withstand voltage [KV]	4	4	4
导线截面积 Conductor cross section	硬质导线 Solid[mm²]	0.25~2.5		
	柔性导线 Flexible[mm²]	0.25~2.5		

材料 Material		
绝缘材料	Insulation Material	PA66
阻燃等级	Flame retardant rating	UL94V-0
导体材料	Conductor Material	Copper alloy
导体表面镀层	Plating of conductor surface	Sn plated

一般参数 Other Data		
间距/极数	Pitch/Poles [mm]/[P]	5.0,5.08/2~24
剥线长度	Stripping Length [mm]	8~9
螺丝/扭矩	Screw/Torque(Max)[N.m]	/
工作温度	Operating temperature[℃]	-40~+105
焊锡温度	Soldering temperature	260℃/5S
引针尺寸	Pin dimensions [mm]	1.3*0.8
PCB板孔径	PCB Hole Diameter [mm]	∅1.8

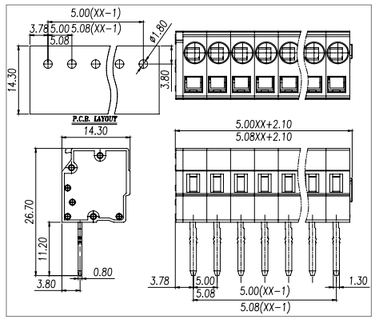



WJ0404/0504-02XX

UL/CUL 技术参数
UL/CUL Technical Data

等级	Use Group	B	C	D
额定电压	Rated Voltage [V]	300	150	300
额定电流	Rated Current [A]	15	15	10
接线范围 Wire Range	单芯线 Solid [AWG]	28~12		
	多芯线 Stranded [AWG]	28~12		
耐电压	Dielectric Voltage-Withstand	1.6KV		

IEC 技术参数
IEC Technical Data

过电压类别	Overvoltage Category	Ⅲ	Ⅲ	Ⅱ
污染等级	Contamination Class	3	2	2
额定电压	Rated Voltage [V]	320	320	630
额定电流	Rated Current [A]	12	12	12
额定冲击电压	Impulse withstand voltage [KV]	4	4	4
导线截面积 Conductor cross section	硬质导线 Solid[mm²]	0.25~2.5		
	柔性导线 Flexible[mm²]	0.25~2.5		

材料 Material

绝缘材料	Insulation Material	PA66
阻燃等级	Flame retardant rating	UL94V-0
导体材料	Conductor Material	Copper alloy
导体表面镀层	Plating of conductor surface	Sn plated

一般参数 Other Data

间距/极数	Pitch/Poles [mm]/[P]	5.0,5.08/2~24
剥线长度	Stripping Length [mm]	8~9
螺丝/扭矩	Screw/Torque(Max)[N.m]	/
工作温度	Operating temperature[℃]	-40~+105
焊锡温度	Soldering temperature	260℃/5S
引针尺寸	Pin dimensions [mm]	1.3*0.8
PCB板孔径	PCB Hole Diameter [mm]	∅1.8

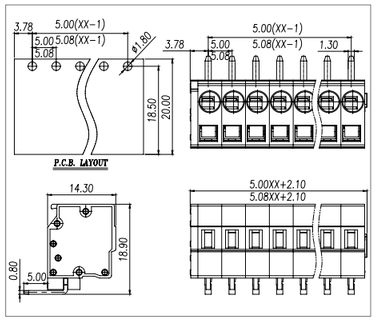

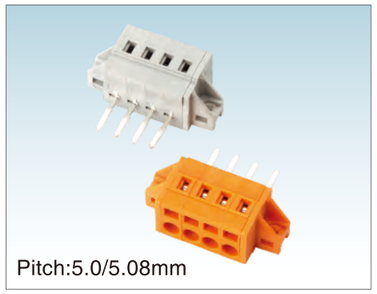

WJ0404/0504-03XX

UL/CUL 技术参数
UL/CUL Technical Data

等级	Use Group	B	C	D
额定电压	Rated Voltage [V]	300	150	300
额定电流	Rated Current [A]	15	15	10
接线范围 Wire Range	单芯线 Solid [AWG]	28~12		
	多芯线 Stranded [AWG]	28~12		
耐电压	Dielectric Voltage-Withstand	1.6KV		

IEC 技术参数
IEC Technical Data

过电压类别	Overvoltage Category	Ⅲ	Ⅲ	Ⅱ
污染等级	Contamination Class	3	2	2
额定电压	Rated Voltage [V]	320	320	630
额定电流	Rated Current [A]	12	12	12
额定冲击电压	Impulse withstand voltage [KV]	4	4	4
导线截面积 Conductor cross section	硬质导线 Solid[mm²]	0.25~2.5		
	柔性导线 Flexible[mm²]	0.25~2.5		

材料 Material

绝缘材料	Insulation Material	PA66
阻燃等级	Flame retardant rating	UL94V-0
导体材料	Conductor Material	Copper alloy
导体表面镀层	Plating of conductor surface	Sn plated

一般参数 Other Data

间距/极数	Pitch/Poles [mm]/[P]	5.0,5.08/2~24
剥线长度	Stripping Length [mm]	8~9
螺丝/扭矩	Screw/Torque(Max)[N.m]	/
工作温度	Operating temperature[℃]	-40~+105
焊锡温度	Soldering temperature	260℃/5S
引针尺寸	Pin dimensions [mm]	1.3*0.8
PCB板孔径	PCB Hole Diameter [mm]	∅1.8

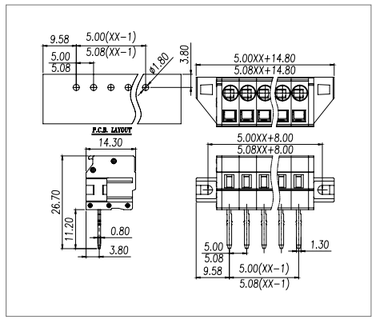

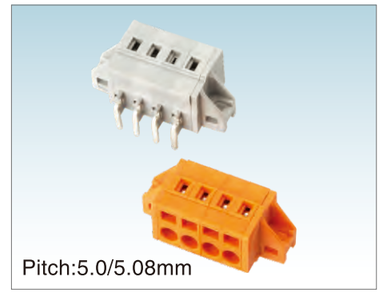

WJ0404/0504-04XX

UL/CUL 技术参数
UL/CUL Technical Data

等级	Use Group	B	C	D
额定电压	Rated Voltage [V]	300	150	300
额定电流	Rated Current [A]	15	15	10
接线范围 Wire Range	单芯线 Solid [AWG]	28~12		
	多芯线 Stranded [AWG]	28~12		
耐电压	Dielectric Voltage-Withstand	1.6KV		

IEC 技术参数
IEC Technical Data

过电压类别	Overvoltage Category	Ⅲ	Ⅲ	Ⅱ
污染等级	Contamination Class	3	2	2
额定电压	Rated Voltage [V]	320	320	630
额定电流	Rated Current [A]	12	12	12
额定冲击电压	Impulse withstand voltage [KV]	4	4	4
导线截面积 Conductor cross section	硬质导线 Solid[mm²]	0.25~2.5		
	柔性导线 Flexible[mm²]	0.25~2.5		

材料 Material

绝缘材料	Insulation Material	PA66
阻燃等级	Flame retardant rating	UL94V-0
导体材料	Conductor Material	Copper alloy
导体表面镀层	Plating of conductor surface	Sn plated

一般参数 Other Data

间距/极数	Pitch/Poles [mm]/[P]	5.0,5.08/2~24
剥线长度	Stripping Length [mm]	8~9
螺丝/扭矩	Screw/Torque(Max)[N.m]	/
工作温度	Operating temperature[℃]	-40~+105
焊锡温度	Soldering temperature	260℃/5S
引针尺寸	Pin dimensions [mm]	1.3*0.8
PCB板孔径	PCB Hole Diameter [mm]	∅1.8

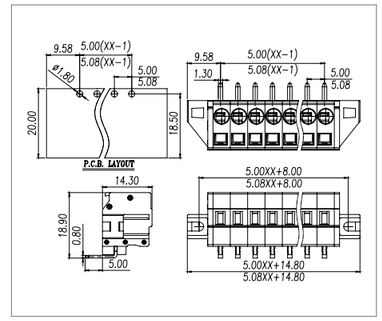

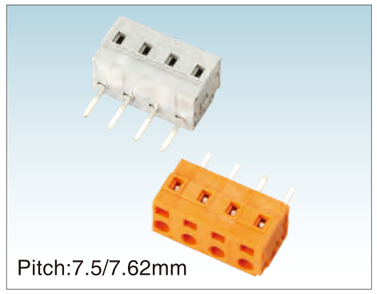

WJ0604/0704-01XX

UL/CUL 技术参数
UL/CUL Technical Data

等级	Use Group	B	C	D
额定电压	Rated Voltage [V]	300	150	300
额定电流	Rated Current [A]	15	15	10
接线范围 Wire Range	单芯线 Solid [AWG]	28~12		
	多芯线 Stranded [AWG]	28~12		
耐电压	Dielectric Voltage-Withstand	1.6KV		

IEC 技术参数
IEC Technical Data

过电压类别	Overvoltage Category	Ⅲ	Ⅲ	Ⅱ
污染等级	Contamination Class	3	2	2
额定电压	Rated Voltage [V]	320	320	630
额定电流	Rated Current [A]	12	12	12
额定冲击电压	Impulse withstand voltage [KV]	6	6	6
导线截面积 Conductor cross section	硬质导线 Solid[mm²]	0.25~2.5		
	柔性导线 Flexible[mm²]	0.25~2.5		

材料 Material

绝缘材料	Insulation Material	PA66
阻燃等级	Flame retardant rating	UL94V-0
导体材料	Conductor Material	Copper alloy
导体表面镀层	Plating of conductor surface	Sn plated

一般参数 Other Data

间距/极数	Pitch/Poles [mm]/[P]	7.5,7.62/2~24
剥线长度	Stripping Length [mm]	8~9
螺丝/扭矩	Screw/Torque(Max)[N.m]	/
工作温度	Operating temperature[℃]	-40~+105
焊锡温度	Soldering temperature	260℃/5S
引针尺寸	Pin dimensions [mm]	1.3*0.8
PCB板孔径	PCB Hole Diameter [mm]	∅1.8

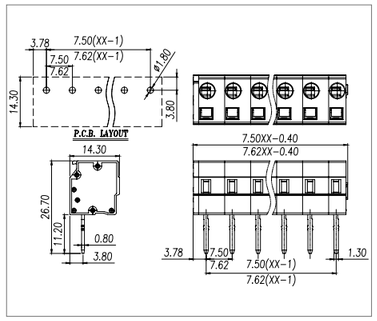

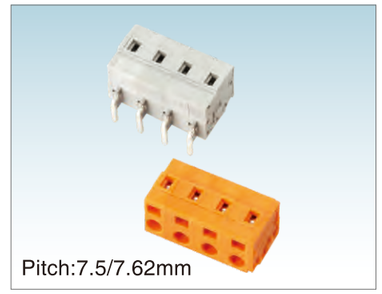

WJ0604/0704-02XX

UL/CUL 技术参数
UL/CUL Technical Data

等级	Use Group	B	C	D
额定电压	Rated Voltage [V]	300	150	300
额定电流	Rated Current [A]	15	15	10
接线范围 Wire Range	单芯线 Solid [AWG]	28~12		
	多芯线 Stranded [AWG]	28~12		
耐电压	Dielectric Voltage-Withstand	1.6KV		

IEC 技术参数
IEC Technical Data

过电压类别	Overvoltage Category	Ⅲ	Ⅲ	Ⅱ
污染等级	Contamination Class	3	2	2
额定电压	Rated Voltage [V]	320	320	630
额定电流	Rated Current [A]	12	12	12
额定冲击电压	Impulse withstand voltage [KV]	6	6	6
导线截面积 Conductor cross section	硬质导线 Solid[mm²]	0.25~2.5		
	柔性导线 Flexible[mm²]	0.25~2.5		

材料 Material

绝缘材料	Insulation Material	PA66
阻燃等级	Flame retardant rating	UL94V-0
导体材料	Conductor Material	Copper alloy
导体表面镀层	Plating of conductor surface	Sn plated

一般参数 Other Data

间距/极数	Pitch/Poles [mm]/[P]	7.5,7.62/2~24
剥线长度	Stripping Length [mm]	8~9
螺丝/扭矩	Screw/Torque(Max)[N.m]	/
工作温度	Operating temperature[℃]	-40~+105
焊锡温度	Soldering temperature	260℃/5S
引针尺寸	Pin dimensions [mm]	1.3*0.8
PCB板孔径	PCB Hole Diameter [mm]	∅1.8

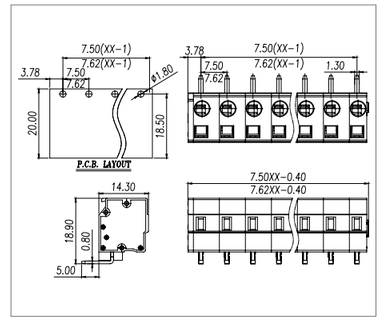

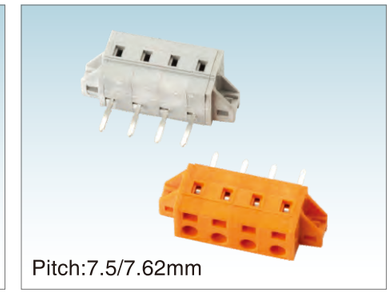

WJ0604/0704-03XX

UL/CUL 技术参数
UL/CUL Technical Data

等级	Use Group	B	C	D
额定电压	Rated Voltage [V]	300	150	300
额定电流	Rated Current [A]	15	15	10
接线范围 Wire Range	单芯线 Solid [AWG]	28~12		
	多芯线 Stranded [AWG]	28~12		
耐电压	Dielectric Voltage-Withstand	1.6KV		

IEC 技术参数
IEC Technical Data

过电压类别	Overvoltage Category	Ⅲ	Ⅲ	Ⅱ
污染等级	Contamination Class	3	2	2
额定电压	Rated Voltage [V]	320	320	630
额定电流	Rated Current [A]	12	12	12
额定冲击电压	Impulse withstand voltage [KV]	6	6	6
导线截面积 Conductor cross section	硬质导线 Solid[mm²]	0.25~2.5		
	柔性导线 Flexible[mm²]	0.25~2.5		

材料 Material

绝缘材料	Insulation Material	PA66
阻燃等级	Flame retardant rating	UL94V-0
导体材料	Conductor Material	Copper alloy
导体表面镀层	Plating of conductor surface	Sn plated

一般参数 Other Data

间距/极数	Pitch/Poles [mm]/[P]	7.5,7.62/2~24
剥线长度	Stripping Length [mm]	8~9
螺丝/扭矩	Screw/Torque(Max)[N.m]	/
工作温度	Operating temperature[℃]	-40~+105
焊锡温度	Soldering temperature	260℃/5S
引针尺寸	Pin dimensions [mm]	1.3*0.8
PCB板孔径	PCB Hole Diameter [mm]	∅1.8

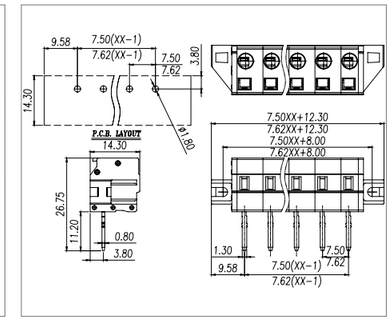

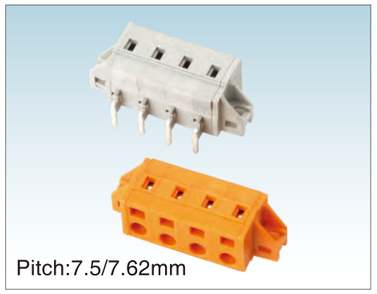

WJ0604/0704-04XX

UL/CUL 技术参数 UL/CUL Technical Data				
等级	Use Group	B	C	D
额定电压	Rated Voltage [V]	300	150	300
额定电流	Rated Current [A]	15	15	10
接线范围 Wire Range	单芯线 Solid [AWG]	28~12		
	多芯线 Stranded [AWG]	28~12		
耐电压	Dielectric Voltage-Withstand	1.6KV		
IEC 技术参数 IEC Technical Data				
过电压类别	Overvoltage Category	Ⅲ	Ⅲ	Ⅱ
污染等级	Contamination Class	3	2	2
额定电压	Rated Voltage [V]	320	320	630
额定电流	Rated Current [A]	12	12	12
额定冲击电压	Impulse withstand voltage [KV]	6	6	6
导线截面积 Conductor cross section	硬质导线 Solid[mm²]	0.25~2.5		
	柔性导线 Flexible[mm²]	0.25~2.5		
材料 Material				
绝缘材料	Insulation Material	PA66		
阻燃等级	Flame retardant rating	UL94V-0		
导体材料	Conductor Material	Copper alloy		
导体表面镀层	Plating of conductor surface	Sn plated		
一般参数 Other Data				
间距/极数	Pitch/Poles [mm]/[P]	7.5,7.62/2~24		
剥线长度	Stripping Length [mm]	8~9		
螺丝/扭矩	Screw/Torque(Max)[N.m]	/		
工作温度	Operating temperature[℃]	-40~+105		
焊锡温度	Soldering temperature	260℃/5S		
引针尺寸	Pin dimensions [mm]	1.3*0.8		
PCB板孔径	PCB Hole Diameter [mm]	∅1.8		

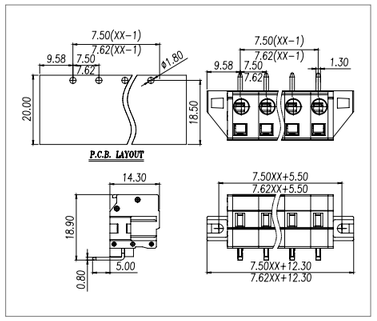



WJ0405/0505-01XX

UL/CUL 技术参数 UL/CUL Technical Data				
等级	Use Group	B	C	D
额定电压	Rated Voltage [V]	300	-	300
额定电流	Rated Current [A]	15	-	10
接线范围 Wire Range	单芯线 Solid [AWG]	/		
	多芯线 Stranded [AWG]	/		
耐电压	Dielectric Voltage-Withstand	1.6KV		
IEC 技术参数 IEC Technical Data				
过电压类别	Overvoltage Category	Ⅲ	Ⅲ	Ⅱ
污染等级	Contamination Class	3	2	2
额定电压	Rated Voltage [V]	320	320	630
额定电流	Rated Current [A]	12	12	10
额定冲击电压	Impulse withstand voltage [KV]	4	4	4
导线截面积 Conductor cross section	硬质导线 Solid[mm²]	/		
	柔性导线 Flexible[mm²]	/		
材料 Material				
绝缘材料	Insulation Material	PA66		
阻燃等级	Flame retardant rating	UL94V-0		
导体材料	Conductor Material	Copper alloy		
导体表面镀层	Plating of conductor surface	Sn plated		
一般参数 Other Data				
间距/极数	Pitch/Poles [mm]/[P]	5.0,5.08/2~24		
剥线长度	Stripping Length [mm]	/		
螺丝/扭矩	Screw/Torque(Max)[N.m]	/		
工作温度	Operating temperature[℃]	-40~+105		
焊锡温度	Soldering temperature	260℃/5S		
引针尺寸	Pin dimensions [mm]	0.6*1.0		
PCB板孔径	PCB Hole Diameter [mm]	∅1.4		

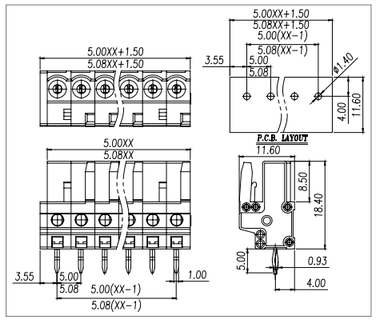



WJ0405/0505-02XX

UL/CUL 技术参数 UL/CUL Technical Data				
等级	Use Group	B	C	D
额定电压	Rated Voltage [V]	300	-	300
额定电流	Rated Current [A]	15	-	10
接线范围 Wire Range	单芯线 Solid [AWG]	/		
	多芯线 Stranded [AWG]	/		
耐电压	Dielectric Voltage-Withstand	1.6KV		
IEC 技术参数 IEC Technical Data				
过电压类别	Overvoltage Category	Ⅲ	Ⅲ	Ⅱ
污染等级	Contamination Class	3	2	2
额定电压	Rated Voltage [V]	320	320	630
额定电流	Rated Current [A]	12	12	10
额定冲击电压	Impulse withstand voltage [KV]	4	4	4
导线截面积 Conductor cross section	硬质导线 Solid[mm²]	/		
	柔性导线 Flexible[mm²]	/		
材料 Material				
绝缘材料	Insulation Material	PA66		
阻燃等级	Flame retardant rating	UL94V-0		
导体材料	Conductor Material	Copper alloy		
导体表面镀层	Plating of conductor surface	Sn plated		
一般参数 Other Data				
间距/极数	Pitch/Poles [mm]/[P]	5.0,5.08/2~24		
剥线长度	Stripping Length [mm]	/		
螺丝/扭矩	Screw/Torque(Max)[N.m]	/		
工作温度	Operating temperature[℃]	-40~+105		
焊锡温度	Soldering temperature	260℃/5S		
引针尺寸	Pin dimensions [mm]	0.6*1.0		
PCB板孔径	PCB Hole Diameter [mm]	∅1.4		

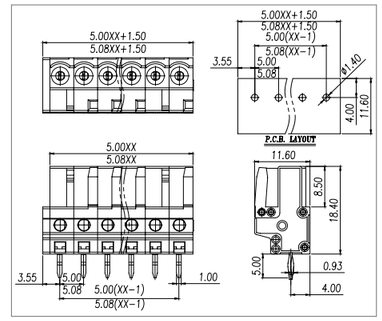

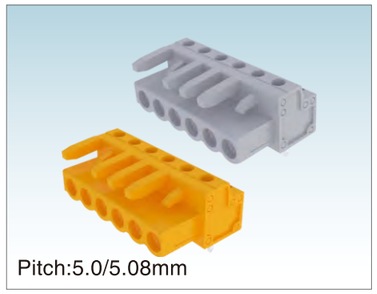

WJ0405/0505-03XX

UL/CUL 技术参数 UL/CUL Technical Data				
等级	Use Group	B	C	D
额定电压	Rated Voltage [V]	300	-	300
额定电流	Rated Current [A]	15	-	10
接线范围 Wire Range	单芯线 Solid [AWG]	/		
	多芯线 Stranded [AWG]	/		
耐电压	Dielectric Voltage-Withstand	1.6KV		
IEC 技术参数 IEC Technical Data				
过电压类别	Overvoltage Category	Ⅲ	Ⅲ	Ⅱ
污染等级	Contamination Class	3	2	2
额定电压	Rated Voltage [V]	320	320	630
额定电流	Rated Current [A]	12	12	10
额定冲击电压	Impulse withstand voltage [KV]	4	4	4
导线截面积 Conductor cross section	硬质导线 Solid[mm²]	/		
	柔性导线 Flexible[mm²]	/		
材料 Material				
绝缘材料	Insulation Material	PA66		
阻燃等级	Flame retardant rating	UL94V-0		
导体材料	Conductor Material	Copper alloy		
导体表面镀层	Plating of conductor surface	Sn plated		
一般参数 Other Data				
间距/极数	Pitch/Poles [mm]/[P]	5.0,5.08/2~24		
剥线长度	Stripping Length [mm]	/		
螺丝/扭矩	Screw/Torque(Max)[N.m]	/		
工作温度	Operating temperature[℃]	-40~+105		
焊锡温度	Soldering temperature	260℃/5S		
引针尺寸	Pin dimensions [mm]	0.6*1.0		
PCB板孔径	PCB Hole Diameter [mm]	∅1.4		

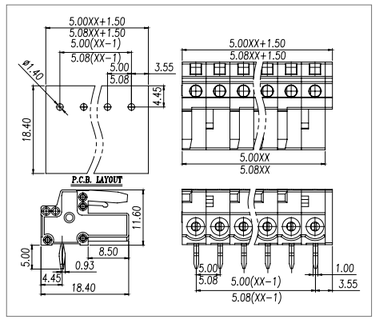

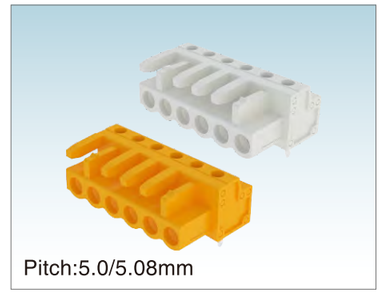

WJ0405/0505-04XX

UL/CUL 技术参数 UL/CUL Technical Data				
等级	Use Group	B	C	D
额定电压	Rated Voltage [V]	300	-	300
额定电流	Rated Current [A]	15	-	10
接线范围 Wire Range	单芯线 Solid [AWG]	/		
	多芯线 Stranded [AWG]	/		
耐电压	Dielectric Voltage-Withstand	1.6KV		
IEC 技术参数 IEC Technical Data				
过电压类别	Overvoltage Category	Ⅲ	Ⅲ	Ⅱ
污染等级	Contamination Class	3	2	2
额定电压	Rated Voltage [V]	320	320	630
额定电流	Rated Current [A]	12	12	10
额定冲击电压	Impulse withstand voltage [KV]	4	4	4
导线截面积 Conductor cross section	硬质导线 Solid[mm²]	/		
	柔性导线 Flexible[mm²]	/		
材料 Material				
绝缘材料	Insulation Material	PA66		
阻燃等级	Flame retardant rating	UL94V-0		
导体材料	Conductor Material	Copper alloy		
导体表面镀层	Plating of conductor surface	Sn plated		
一般参数 Other Data				
间距/极数	Pitch/Poles [mm]/[P]	5.0,5.08/2~24		
剥线长度	Stripping Length [mm]	/		
螺丝/扭矩	Screw/Torque(Max)[N.m]	/		
工作温度	Operating temperature[℃]	-40~+105		
焊锡温度	Soldering temperature	260℃/5S		
引针尺寸	Pin dimensions [mm]	0.6*1.0		
PCB板孔径	PCB Hole Diameter [mm]	∅1.4		

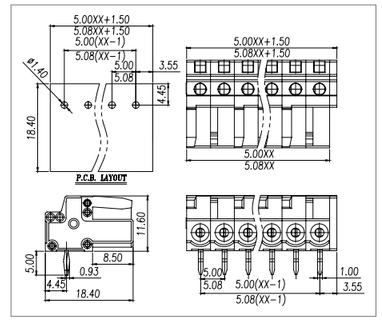

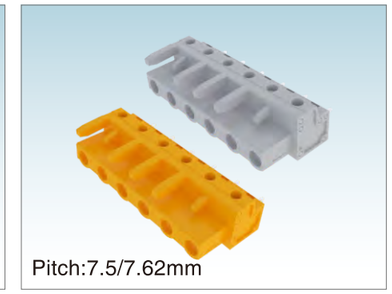

WJ0605/0705-01XX

UL/CUL 技术参数 UL/CUL Technical Data				
等级	Use Group	B	C	D
额定电压	Rated Voltage [V]	300	-	300
额定电流	Rated Current [A]	15	-	10
接线范围 Wire Range	单芯线 Solid [AWG]	/		
	多芯线 Stranded [AWG]	/		
耐电压	Dielectric Voltage-Withstand	1.6KV		
IEC 技术参数 IEC Technical Data				
过电压类别	Overvoltage Category	Ⅲ	Ⅲ	Ⅱ
污染等级	Contamination Class	3	2	2
额定电压	Rated Voltage [V]	320	320	630
额定电流	Rated Current [A]	12	12	10
额定冲击电压	Impulse withstand voltage [KV]	4	4	4
导线截面积 Conductor cross section	硬质导线 Solid[mm²]	/		
	柔性导线 Flexible[mm²]	/		
材料 Material				
绝缘材料	Insulation Material	PA66		
阻燃等级	Flame retardant rating	UL94V-0		
导体材料	Conductor Material	Copper alloy		
导体表面镀层	Plating of conductor surface	Sn plated		
一般参数 Other Data				
间距/极数	Pitch/Poles [mm]/[P]	7.5,7.62/2~24		
剥线长度	Stripping Length [mm]	/		
螺丝/扭矩	Screw/Torque(Max)[N.m]	/		
工作温度	Operating temperature[℃]	-40~+105		
焊锡温度	Soldering temperature	260℃/5S		
引针尺寸	Pin dimensions [mm]	0.6*1.0		
PCB板孔径	PCB Hole Diameter [mm]	∅1.4		

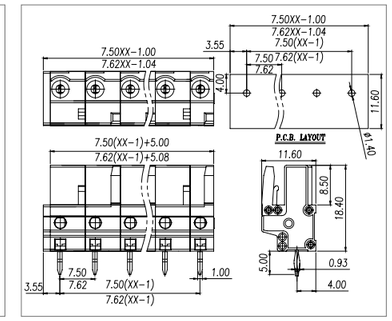



Pitch:7.5/7.62mm

WJ0605/0705-02XX

UL/CUL 技术参数 UL/CUL Technical Data				
等级	Use Group	B	C	D
额定电压	Rated Voltage [V]	300	-	300
额定电流	Rated Current [A]	15	-	10
接线范围 Wire Range	单芯线 Solid [AWG]	/		
	多芯线 Stranded [AWG]	/		
耐电压	Dielectric Voltage-Withstand	1.6KV		

IEC 技术参数 IEC Technical Data				
过电压类别	Overvoltage Category	Ⅲ	Ⅲ	Ⅱ
污染等级	Contamination Class	3	2	2
额定电压	Rated Voltage [V]	320	320	630
额定电流	Rated Current [A]	12	12	10
额定冲击电压	Impulse withstand voltage [KV]	4	4	4
导线截面积 Conductor cross section	硬质导线 Solid[mm²]	/		
	柔性导线 Flexible[mm²]	/		

材料 Material		
绝缘材料	Insulation Material	PA66
阻燃等级	Flame retardant rating	UL94V-0
导体材料	Conductor Material	Copper alloy
导体表面镀层	Plating of conductor surface	Sn plated

一般参数 Other Data		
间距/极数	Pitch/Poles [mm]/[P]	7.5,7.62/2~24
剥线长度	Stripping Length [mm]	/
螺丝/扭矩	Screw/Torque(Max)[N.m]	/
工作温度	Operating temperature[℃]	-40~+105
焊锡温度	Soldering temperature	260℃/5S
引针尺寸	Pin dimensions [mm]	0.6*1.0
PCB板孔径	PCB Hole Diameter [mm]	∅1.4

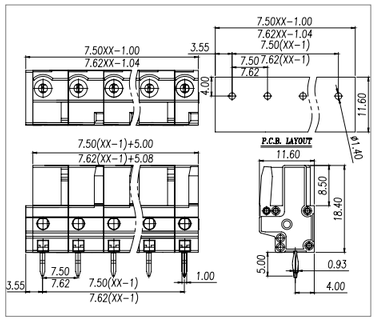

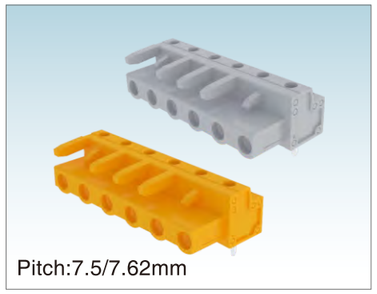

Pitch:7.5/7.62mm

WJ0605/0705-03XX

UL/CUL 技术参数 UL/CUL Technical Data				
等级	Use Group	B	C	D
额定电压	Rated Voltage [V]	300	-	300
额定电流	Rated Current [A]	15	-	10
接线范围 Wire Range	单芯线 Solid [AWG]	/		
	多芯线 Stranded [AWG]	/		
耐电压	Dielectric Voltage-Withstand	1.6KV		

IEC 技术参数 IEC Technical Data				
过电压类别	Overvoltage Category	Ⅲ	Ⅲ	Ⅱ
污染等级	Contamination Class	3	2	2
额定电压	Rated Voltage [V]	320	320	630
额定电流	Rated Current [A]	12	12	10
额定冲击电压	Impulse withstand voltage [KV]	4	4	4
导线截面积 Conductor cross section	硬质导线 Solid[mm²]	/		
	柔性导线 Flexible[mm²]	/		

材料 Material		
绝缘材料	Insulation Material	PA66
阻燃等级	Flame retardant rating	UL94V-0
导体材料	Conductor Material	Copper alloy
导体表面镀层	Plating of conductor surface	Sn plated

一般参数 Other Data		
间距/极数	Pitch/Poles [mm]/[P]	7.5,7.62/2~24
剥线长度	Stripping Length [mm]	/
螺丝/扭矩	Screw/Torque(Max)[N.m]	/
工作温度	Operating temperature[℃]	-40~+105
焊锡温度	Soldering temperature	260℃/5S
引针尺寸	Pin dimensions [mm]	0.6*1.0
PCB板孔径	PCB Hole Diameter [mm]	∅1.4

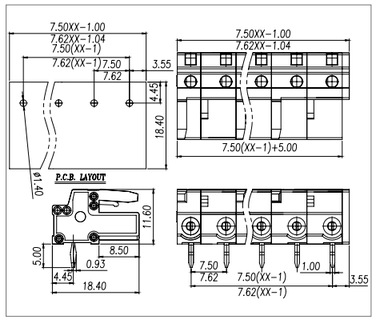

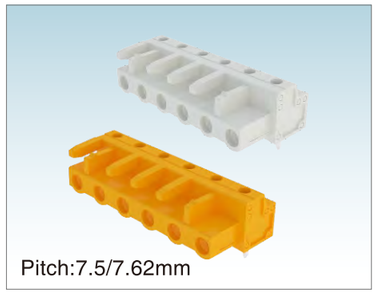

Pitch:7.5/7.62mm

WJ0605/0705-04XX

UL/CUL 技术参数 UL/CUL Technical Data				
等级	Use Group	B	C	D
额定电压	Rated Voltage [V]	300	-	300
额定电流	Rated Current [A]	15	-	10
接线范围 Wire Range	单芯线 Solid [AWG]	/		
	多芯线 Stranded [AWG]	/		
耐电压	Dielectric Voltage-Withstand	1.6KV		

IEC 技术参数 IEC Technical Data				
过电压类别	Overvoltage Category	Ⅲ	Ⅲ	Ⅱ
污染等级	Contamination Class	3	2	2
额定电压	Rated Voltage [V]	320	320	630
额定电流	Rated Current [A]	12	12	10
额定冲击电压	Impulse withstand voltage [KV]	4	4	4
导线截面积 Conductor cross section	硬质导线 Solid[mm²]	/		
	柔性导线 Flexible[mm²]	/		

材料 Material		
绝缘材料	Insulation Material	PA66
阻燃等级	Flame retardant rating	UL94V-0
导体材料	Conductor Material	Copper alloy
导体表面镀层	Plating of conductor surface	Sn plated

一般参数 Other Data		
间距/极数	Pitch/Poles [mm]/[P]	7.5,7.62/2~24
剥线长度	Stripping Length [mm]	/
螺丝/扭矩	Screw/Torque(Max)[N.m]	/
工作温度	Operating temperature[℃]	-40~+105
焊锡温度	Soldering temperature	260℃/5S
引针尺寸	Pin dimensions [mm]	0.6*1.0
PCB板孔径	PCB Hole Diameter [mm]	∅1.4

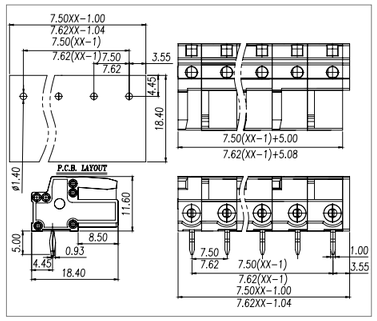

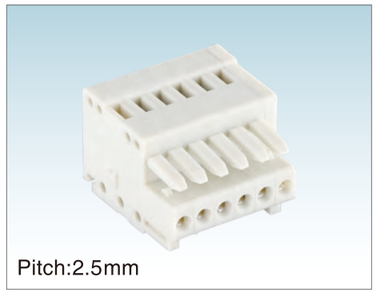

Pitch:2.5mm

WJ0101-01XX

UL/CUL 技术参数 UL/CUL Technical Data				
等级	Use Group	B	C	D
额定电压	Rated Voltage [V]	150	-	-
额定电流	Rated Current [A]	4	-	-
接线范围 Wire Range	单芯线 Solid [AWG]	28~20		
	多芯线 Stranded [AWG]	28~20		
耐电压	Dielectric Voltage-Withstand	1.3KV		

IEC 技术参数 IEC Technical Data				
过电压类别	Overvoltage Category	Ⅲ	Ⅲ	Ⅱ
污染等级	Contamination Class	3	2	2
额定电压	Rated Voltage [V]	100	160	320
额定电流	Rated Current [A]	6	6	6
额定冲击电压	Impulse withstand voltage [KV]	2.5	2.5	2.5
导线截面积 Conductor cross section	硬质导线 Solid[mm²]	0.25~0.5		
	柔性导线 Flexible[mm²]	0.25~0.5		

材料 Material		
绝缘材料	Insulation Material	PA66
阻燃等级	Flame retardant rating	UL94V-0
导体材料	Conductor Material	Copper alloy
导体表面镀层	Plating of conductor surface	Sn plated

一般参数 Other Data		
间距/极数	Pitch/Poles [mm]/[P]	2.5/2~12
剥线长度	Stripping Length [mm]	5~6
螺丝/扭矩	Screw/Torque(Max)[N.m]	/
工作温度	Operating temperature[℃]	-40~+105
焊锡温度	Soldering temperature	/
引针尺寸	Pin dimensions [mm]	/
PCB板孔径	PCB Hole Diameter [mm]	/

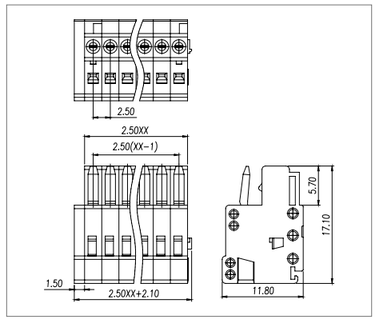



Pitch:2.5mm

WJ0101-02XX

UL/CUL 技术参数 UL/CUL Technical Data				
等级	Use Group	B	C	D
额定电压	Rated Voltage [V]	150	-	-
额定电流	Rated Current [A]	4	-	-
接线范围 Wire Range	单芯线 Solid [AWG]	28~20		
	多芯线 Stranded [AWG]	28~20		
耐电压	Dielectric Voltage-Withstand	1.3KV		

IEC 技术参数 IEC Technical Data				
过电压类别	Overvoltage Category	Ⅲ	Ⅲ	Ⅱ
污染等级	Contamination Class	3	2	2
额定电压	Rated Voltage [V]	100	160	320
额定电流	Rated Current [A]	6	6	6
额定冲击电压	Impulse withstand voltage [KV]	2.5	2.5	2.5
导线截面积 Conductor cross section	硬质导线 Solid[mm²]	0.25~0.5		
	柔性导线 Flexible[mm²]	0.25~0.5		

材料 Material		
绝缘材料	Insulation Material	PA66
阻燃等级	Flame retardant rating	UL94V-0
导体材料	Conductor Material	Copper alloy
导体表面镀层	Plating of conductor surface	Sn plated

一般参数 Other Data		
间距/极数	Pitch/Poles [mm]/[P]	2.5/2~12
剥线长度	Stripping Length [mm]	5~6
螺丝/扭矩	Screw/Torque(Max)[N.m]	/
工作温度	Operating temperature[℃]	-40~+105
焊锡温度	Soldering temperature	/
引针尺寸	Pin dimensions [mm]	/
PCB板孔径	PCB Hole Diameter [mm]	/

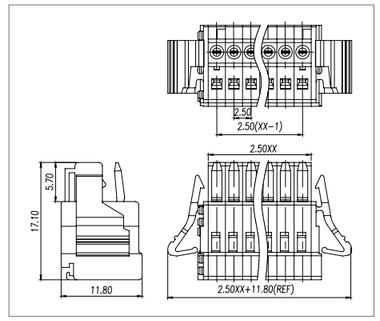

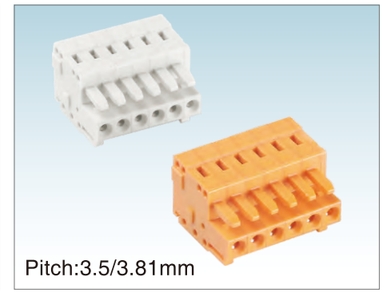

Pitch:3.5/3.81mm

WJ0201/0301-01XX

UL/CUL 技术参数 UL/CUL Technical Data				
等级	Use Group	B	C	D
额定电压	Rated Voltage [V]	300	-	300
额定电流	Rated Current [A]	10	-	10
接线范围 Wire Range	单芯线 Solid [AWG]	28~14		
	多芯线 Stranded [AWG]	28~14		
耐电压	Dielectric Voltage-Withstand	1.6KV		

IEC 技术参数 IEC Technical Data				
过电压类别	Overvoltage Category	Ⅲ	Ⅲ	Ⅱ
污染等级	Contamination Class	3	2	2
额定电压	Rated Voltage [V]	160	160	320
额定电流	Rated Current [A]	10	10	10
额定冲击电压	Impulse withstand voltage [KV]	2.5	2.5	2.5
导线截面积 Conductor cross section	硬质导线 Solid[mm²]	0.25~1.5		
	柔性导线 Flexible[mm²]	0.25~1.5		

材料 Material		
绝缘材料	Insulation Material	PA66
阻燃等级	Flame retardant rating	UL94V-0
导体材料	Conductor Material	Copper alloy
导体表面镀层	Plating of conductor surface	Sn plated

一般参数 Other Data		
间距/极数	Pitch/Poles [mm]/[P]	3.5,3.81/2~24
剥线长度	Stripping Length [mm]	6~7
螺丝/扭矩	Screw/Torque(Max)[N.m]	/
工作温度	Operating temperature[℃]	-40~+105
焊锡温度	Soldering temperature	/
引针尺寸	Pin dimensions [mm]	/
PCB板孔径	PCB Hole Diameter [mm]	/

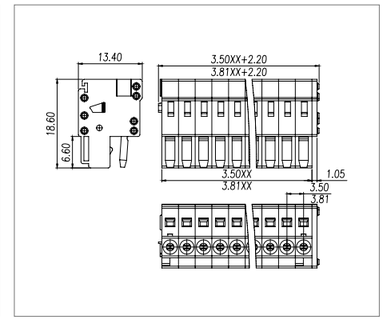



Pitch:3.5/3.81mm

WJ0201/0301-02XX

UL/CUL 技术参数 UL/CUL Technical Data				
等级	Use Group	B	C	D
额定电压	Rated Voltage [V]	300	-	300
额定电流	Rated Current [A]	10	-	10
接线范围 Wire Range	单芯线 Solid [AWG]	28~14		
	多芯线 Stranded [AWG]	28~14		
耐电压	Dielectric Voltage-Withstand	1.6KV		
IEC 技术参数 IEC Technical Data				
过电压类别	Overvoltage Category	Ⅲ	Ⅲ	Ⅱ
污染等级	Contamination Class	3	2	2
额定电压	Rated Voltage [V]	160	160	320
额定电流	Rated Current [A]	10	10	10
额定冲击电压	Impulse withstand voltage [KV]	2.5	2.5	2.5
导线截面积 Conductor cross section	硬质导线 Solid[mm²]	0.25~1.5		
	柔性导线 Flexible[mm²]	0.25~1.5		
材料 Material				
绝缘材料	Insulation Material	PA66		
阻燃等级	Flame retardant rating	UL94V-0		
导体材料	Conductor Material	Copper alloy		
导体表面镀层	Plating of conductor surface	Sn plated		
一般参数 Other Data				
间距/极数	Pitch/Poles [mm]/[P]	3.5,3.81/2~24		
剥线长度	Stripping Length [mm]	6~7		
螺丝/扭矩	Screw/Torque(Max)[N.m]	/		
工作温度	Operating temperature[℃]	-40~+105		
焊锡温度	Soldering temperature	/		
引针尺寸	Pin dimensions [mm]	/		
PCB板孔径	PCB Hole Diameter [mm]	/		

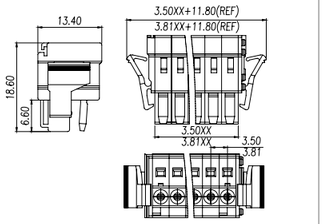



Pitch:2.5mm

WJ0102-01XX

UL/CUL 技术参数 UL/CUL Technical Data				
等级	Use Group	B	C	D
额定电压	Rated Voltage [V]	150	-	150
额定电流	Rated Current [A]	4	-	4
接线范围 Wire Range	单芯线 Solid [AWG]	/		
	多芯线 Stranded [AWG]	/		
耐电压	Dielectric Voltage-Withstand	1.6KV		
IEC 技术参数 IEC Technical Data				
过电压类别	Overvoltage Category	Ⅲ	Ⅲ	Ⅱ
污染等级	Contamination Class	3	2	2
额定电压	Rated Voltage [V]	80	160	320
额定电流	Rated Current [A]	6	6	6
额定冲击电压	Impulse withstand voltage [KV]	2.5	2.5	2.5
导线截面积 Conductor cross section	硬质导线 Solid[mm²]	/		
	柔性导线 Flexible[mm²]	/		
材料 Material				
绝缘材料	Insulation Material	PA66		
阻燃等级	Flame retardant rating	UL94V-0		
导体材料	Conductor Material	Copper alloy		
导体表面镀层	Plating of conductor surface	Sn plated		
一般参数 Other Data				
间距/极数	Pitch/Poles [mm]/[P]	2.5/2~12		
剥线长度	Stripping Length [mm]	/		
螺丝/扭矩	Screw/Torque(Max)[N.m]	/		
工作温度	Operating temperature[℃]	-40~+105		
焊锡温度	Soldering temperature	260℃/5S		
引针尺寸	Pin dimensions [mm]	0.8*0.8		
PCB板孔径	PCB Hole Diameter [mm]	∅1.4		

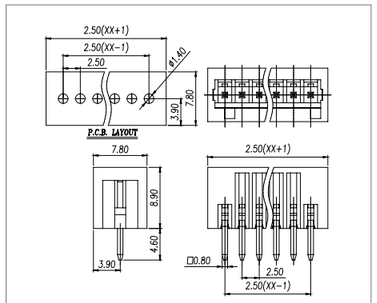

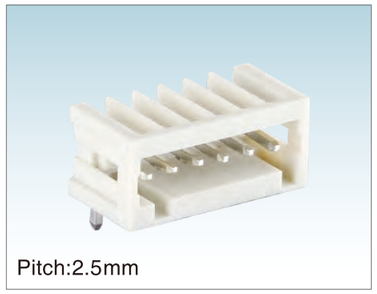

Pitch:2.5mm

WJ0102-02XX

UL/CUL 技术参数 UL/CUL Technical Data				
等级	Use Group	B	C	D
额定电压	Rated Voltage [V]	150	-	150
额定电流	Rated Current [A]	4	-	4
接线范围 Wire Range	单芯线 Solid [AWG]	/		
	多芯线 Stranded [AWG]	/		
耐电压	Dielectric Voltage-Withstand	1.3KV		
IEC 技术参数 IEC Technical Data				
过电压类别	Overvoltage Category	Ⅲ	Ⅲ	Ⅱ
污染等级	Contamination Class	3	2	2
额定电压	Rated Voltage [V]	80	160	320
额定电流	Rated Current [A]	6	6	6
额定冲击电压	Impulse withstand voltage [KV]	2.5	2.5	2.5
导线截面积 Conductor cross section	硬质导线 Solid[mm²]	/		
	柔性导线 Flexible[mm²]	/		
材料 Material				
绝缘材料	Insulation Material	PA66		
阻燃等级	Flame retardant rating	UL94V-0		
导体材料	Conductor Material	Copper alloy		
导体表面镀层	Plating of conductor surface	Sn plated		
一般参数 Other Data				
间距/极数	Pitch/Poles [mm]/[P]	2.5/2~12		
剥线长度	Stripping Length [mm]	/		
螺丝/扭矩	Screw/Torque(Max)[N.m]	/		
工作温度	Operating temperature[℃]	-40~+105		
焊锡温度	Soldering temperature	260℃/5S		
引针尺寸	Pin dimensions [mm]	0.8*0.8		
PCB板孔径	PCB Hole Diameter [mm]	∅1.4		

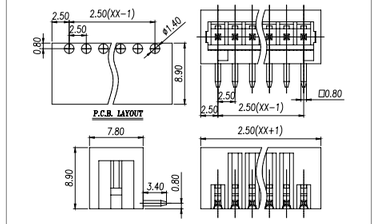

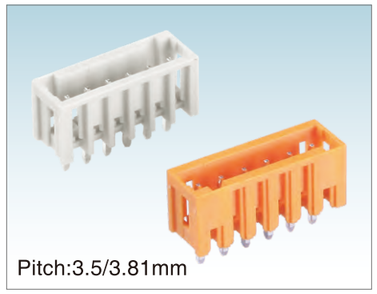

Pitch:3.5/3.81mm

WJ0202/0302-01XX

UL/CUL 技术参数 UL/CUL Technical Data				
等级	Use Group	B	C	D
额定电压	Rated Voltage [V]	300	-	300
额定电流	Rated Current [A]	10	-	10
接线范围 Wire Range	单芯线 Solid [AWG]	/		
	多芯线 Stranded [AWG]	/		
耐电压	Dielectric Voltage-Withstand	1.6KV		
IEC 技术参数 IEC Technical Data				
过电压类别	Overvoltage Category	Ⅲ	Ⅲ	Ⅱ
污染等级	Contamination Class	3	2	2
额定电压	Rated Voltage [V]	160	160	320
额定电流	Rated Current [A]	10	10	10
额定冲击电压	Impulse withstand voltage [KV]	2.5	2.5	2.5
导线截面积 Conductor cross section	硬质导线 Solid[mm²]	/		
	柔性导线 Flexible[mm²]	/		
材料 Material				
绝缘材料	Insulation Material	PA66		
阻燃等级	Flame retardant rating	UL94V-0		
导体材料	Conductor Material	Copper alloy		
导体表面镀层	Plating of conductor surface	Sn plated		
一般参数 Other Data				
间距/极数	Pitch/Poles [mm]/[P]	3.5,3.81/2~24		
剥线长度	Stripping Length [mm]	/		
螺丝/扭矩	Screw/Torque(Max)[N.m]	/		
工作温度	Operating temperature[℃]	-40~+105		
焊锡温度	Soldering temperature	260℃/5S		
引针尺寸	Pin dimensions [mm]	1.0*1.0		
PCB板孔径	PCB Hole Diameter [mm]	∅1.6		

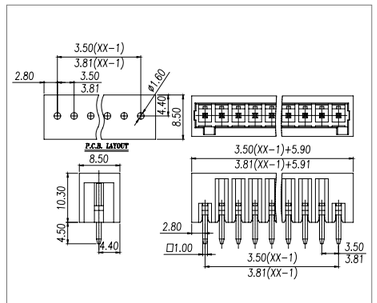

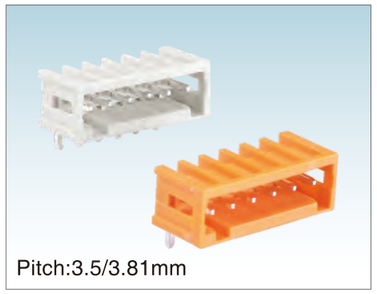

Pitch:3.5/3.81mm

WJ0202/0302-02XX

UL/CUL 技术参数 UL/CUL Technical Data				
等级	Use Group	B	C	D
额定电压	Rated Voltage [V]	300	-	300
额定电流	Rated Current [A]	10	-	10
接线范围 Wire Range	单芯线 Solid [AWG]	/		
	多芯线 Stranded [AWG]	/		
耐电压	Dielectric Voltage-Withstand	1.6KV		
IEC 技术参数 IEC Technical Data				
过电压类别	Overvoltage Category	Ⅲ	Ⅲ	Ⅱ
污染等级	Contamination Class	3	2	2
额定电压	Rated Voltage [V]	160	160	320
额定电流	Rated Current [A]	10	10	10
额定冲击电压	Impulse withstand voltage [KV]	2.5	2.5	2.5
导线截面积 Conductor cross section	硬质导线 Solid[mm²]	/		
	柔性导线 Flexible[mm²]	/		
材料 Material				
绝缘材料	Insulation Material	PA66		
阻燃等级	Flame retardant rating	UL94V-0		
导体材料	Conductor Material	Copper alloy		
导体表面镀层	Plating of conductor surface	Sn plated		
一般参数 Other Data				
间距/极数	Pitch/Poles [mm]/[P]	3.5,3.81/2~24		
剥线长度	Stripping Length [mm]	/		
螺丝/扭矩	Screw/Torque(Max)[N.m]	/		
工作温度	Operating temperature[℃]	-40~+105		
焊锡温度	Soldering temperature	260℃/5S		
引针尺寸	Pin dimensions [mm]	1.0*1.0		
PCB板孔径	PCB Hole Diameter [mm]	∅1.6		

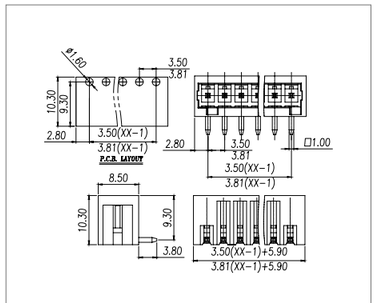

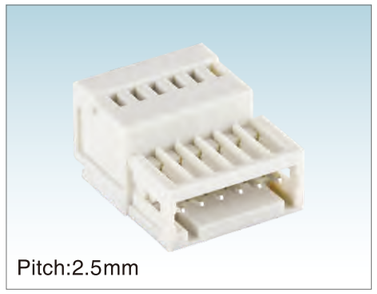

Pitch:2.5mm

WJ0103-01XX

UL/CUL 技术参数 UL/CUL Technical Data				
等级	Use Group	B	C	D
额定电压	Rated Voltage [V]	150	-	150
额定电流	Rated Current [A]	4	-	4
接线范围 Wire Range	单芯线 Solid [AWG]	28~20		
	多芯线 Stranded [AWG]	28~20		
耐电压	Dielectric Voltage-Withstand	1.3KV		
IEC 技术参数 IEC Technical Data				
过电压类别	Overvoltage Category	Ⅲ	Ⅲ	Ⅱ
污染等级	Contamination Class	3	2	2
额定电压	Rated Voltage [V]	100	160	320
额定电流	Rated Current [A]	6	6	6
额定冲击电压	Impulse withstand voltage [KV]	2.5	2.5	2.5
导线截面积 Conductor cross section	硬质导线 Solid[mm²]	0.25~0.5		
	柔性导线 Flexible[mm²]	0.25~0.5		
材料 Material				
绝缘材料	Insulation Material	PA66		
阻燃等级	Flame retardant rating	UL94V-0		
导体材料	Conductor Material	Copper alloy		
导体表面镀层	Plating of conductor surface	Sn plated		
一般参数 Other Data				
间距/极数	Pitch/Poles [mm]/[P]	2.5/2~12		
剥线长度	Stripping Length [mm]	5~6		
螺丝/扭矩	Screw/Torque(Max)[N.m]	/		
工作温度	Operating temperature[℃]	-40~+105		
焊锡温度	Soldering temperature	/		
引针尺寸	Pin dimensions [mm]	/		
PCB板孔径	PCB Hole Diameter [mm]	/		

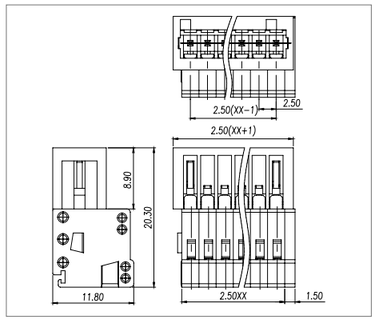

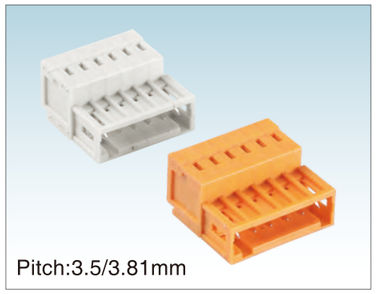

WJ0203/0303-01XX

UL/CUL 技术参数 UL/CUL Technical Data				
等级	Use Group	B	C	D
额定电压	Rated Voltage [V]	300	-	300
额定电流	Rated Current [A]	10	-	10
接线范围 Wire Range	单芯线 Solid [AWG]	28~14		
	多芯线 Stranded [AWG]	28~14		
耐电压	Dielectric Voltage-Withstand	1.6KV		
IEC 技术参数 IEC Technical Data				
过电压类别	Overvoltage Category	Ⅲ	Ⅲ	Ⅱ
污染等级	Contamination Class	3	2	2
额定电压	Rated Voltage [V]	160	160	320
额定电流	Rated Current [A]	10	10	10
额定冲击电压	Impulse withstand voltage [KV]	2.5	2.5	2.5
导线截面积 Conductor cross section	硬质导线 Solid[mm²]	0.25~1.5		
	柔性导线 Flexible[mm²]	0.25~1.5		
材料 Material				
绝缘材料	Insulation Material	PA66		
阻燃等级	Flame retardant rating	UL94V-0		
导体材料	Conductor Material	Copper alloy		
导体表面镀层	Plating of conductor surface	Sn plated		
一般参数 Other Data				
间距/极数	Pitch/Poles [mm]/[P]	3.5,3.81/2~24		
剥线长度	Stripping Length [mm]	6~7		
螺丝/扭矩	Screw/Torque(Max)[N.m]	/		
工作温度	Operating temperature[℃]	-40~+105		
焊锡温度	Soldering temperature	/		
引针尺寸	Pin dimensions [mm]	/		
PCB板孔径	PCB Hole Diameter [mm]	/		

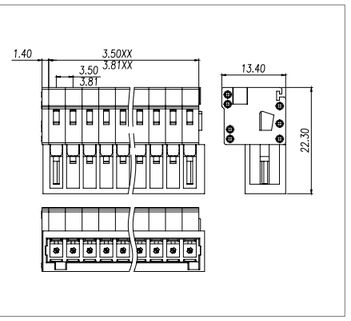

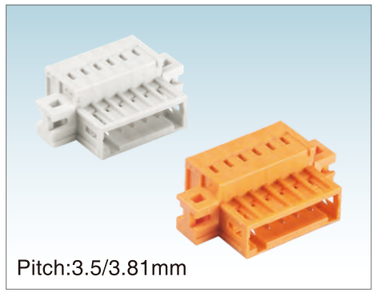

WJ0203/0303-02XX

UL/CUL 技术参数 UL/CUL Technical Data				
等级	Use Group	B	C	D
额定电压	Rated Voltage [V]	300	-	300
额定电流	Rated Current [A]	10	-	10
接线范围 Wire Range	单芯线 Solid [AWG]	28~14		
	多芯线 Stranded [AWG]	28~14		
耐电压	Dielectric Voltage-Withstand	1.6KV		
IEC 技术参数 IEC Technical Data				
过电压类别	Overvoltage Category	Ⅲ	Ⅲ	Ⅱ
污染等级	Contamination Class	3	2	2
额定电压	Rated Voltage [V]	160	160	320
额定电流	Rated Current [A]	10	10	10
额定冲击电压	Impulse withstand voltage [KV]	2.5	2.5	2.5
导线截面积 Conductor cross section	硬质导线 Solid[mm²]	0.25~1.5		
	柔性导线 Flexible[mm²]	0.25~1.5		
材料 Material				
绝缘材料	Insulation Material	PA66		
阻燃等级	Flame retardant rating	UL94V-0		
导体材料	Conductor Material	Copper alloy		
导体表面镀层	Plating of conductor surface	Sn plated		
一般参数 Other Data				
间距/极数	Pitch/Poles [mm]/[P]	3.5,3.81/2~24		
剥线长度	Stripping Length [mm]	6~7		
螺丝/扭矩	Screw/Torque(Max)[N.m]	/		
工作温度	Operating temperature[℃]	-40~+105		
焊锡温度	Soldering temperature	/		
引针尺寸	Pin dimensions [mm]	/		
PCB板孔径	PCB Hole Diameter [mm]	/		

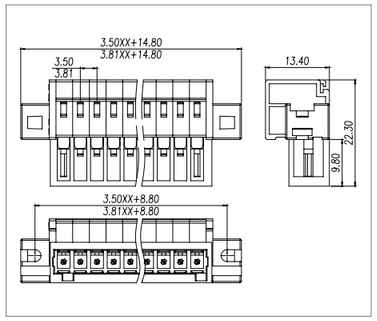

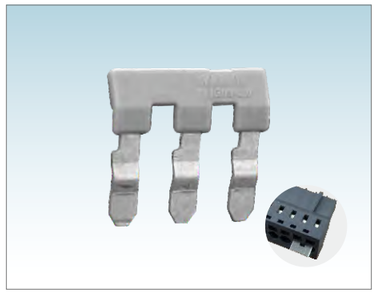

WJG03-5.0

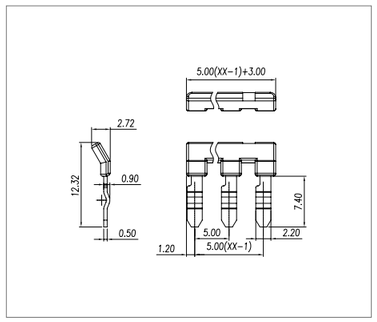



WJG03-7.5

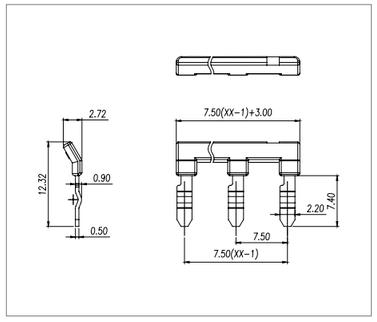



WJT01

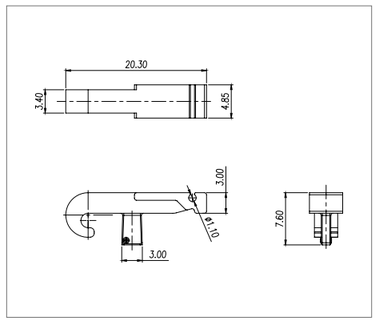



WJT02

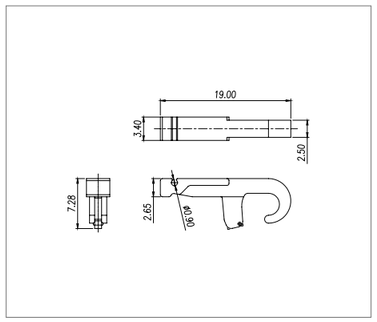

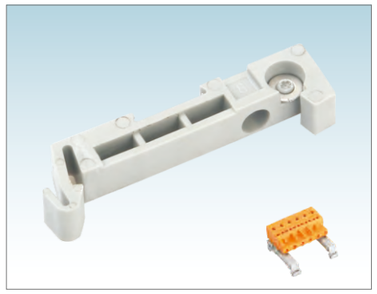

WJG01

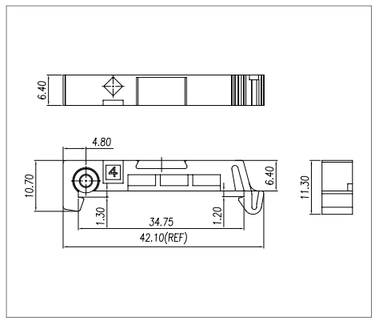



WJT04

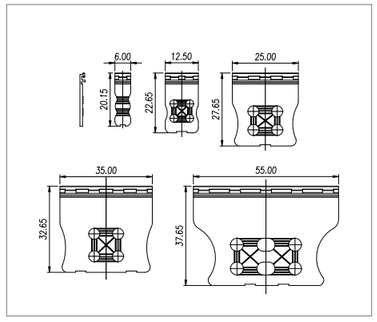



WJT05

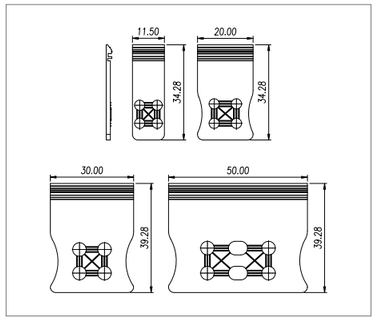

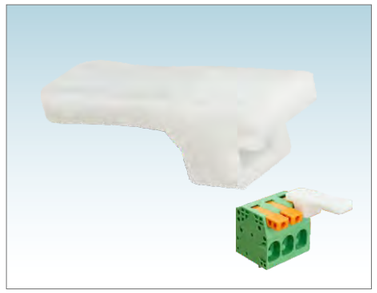

WJT06

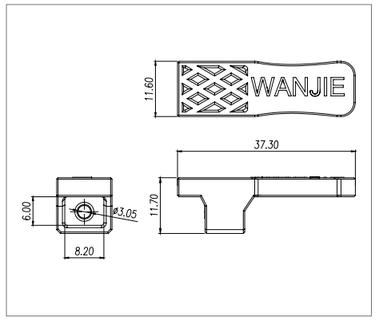

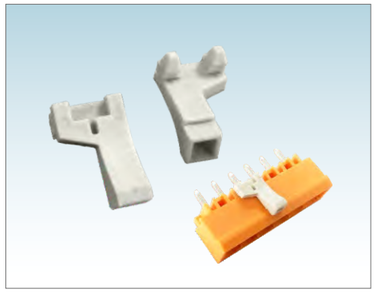

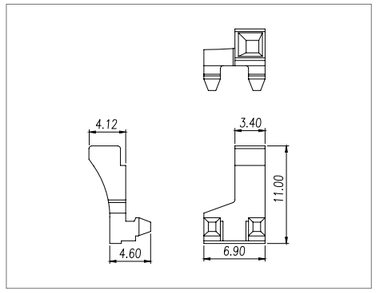

WJT07

MCS多用途连接器互配选型参考表 MCS Terminal Block Matched Reference Table

Plugs \ MCS Headers	WJ0102-01XX	WJ0103-01XX	WJ0202-01XX	WJ0203-01XX	WJ0302-01XX	WJ0303-01XX	WJ0402-01XX	WJ0402-03XX	WJ0402-05XX	WJ0402-07XX	WJ0502-01XX	WJ0502-03XX	WJ0502-05XX	WJ0502-07XX	WJ0602-01XX	WJ0602-03XX	WJ0602-05XX	WJ0602-07XX
	WJ0102-02XX		WJ0202-02XX	WJ0203-02XX	WJ0302-02XX	WJ0303-02XX	WJ0402-02XX	WJ0402-04XX	WJ0402-06XX	WJ0402-08XX	WJ0502-02XX	WJ0502-04XX	WJ0502-06XX	WJ0502-08XX	WJ0602-02XX	WJ0602-04XX	WJ0602-06XX	WJ0602-08XX
WJ0101-01XX	●	●																
WJ0101-02XX	●	●																
WJ0201-01XX			●	●														
WJ0201-02XX			●	●														
WJ0301-01XX					●	●												
WJ0301-02XX					●	●												
WJ0401-01XX							●	●										
WJ0401-02XX									●	●								
WJ0401-03XX							●	●										
WJ0401-04XX									●	●								
WJ0401-05XX							●	●										
WJ0401-06XX									●	●								
WJ0401-07XX							●	●										
WJ0401-08XX									●	●								
WJ0501-01XX											●	●						
WJ0501-02XX													●	●				
WJ0501-03XX											●	●						
WJ0501-04XX													●	●				
WJ0501-05XX											●	●						
WJ0501-06XX													●	●				
WJ0501-07XX											●	●						
WJ0501-08XX													●	●				
WJ0601-01XX															●	●		
WJ0601-02XX																	●	●
WJ0601-03XX															●	●		
WJ0601-04XX																	●	●
WJ0601-05XX															●	●		
WJ0601-06XX																	●	●
WJ0601-07XX															●	●		
WJ0601-08XX																	●	●
WJ0701-01XX																		
WJ0701-02XX																		
WJ0701-03XX																		
WJ0701-04XX																		
WJ0701-05XX																		
WJ0701-06XX																		
WJ0701-07XX																		
WJ0701-08XX																		

MCS多用途连接器互配选型参考表 MCS Terminal Block Matched Reference Table

Plugs \ MCS Headers	WJ0702-01XX	WJ0702-03XX	WJ0702-05XX	WJ0702-07XX	WJ0403-01XX	WJ0403-04XX	WJ0503-01XX	WJ0503-04XX	WJ0603-01XX	WJ0603-04XX	WJ0703-01XX	WJ0703-04XX						
	WJ0702-02XX	WJ0702-04XX	WJ0702-06XX	WJ0702-08XX	WJ0403-02XX	WJ0403-05XX	WJ0503-02XX	WJ0503-05XX	WJ0603-02XX	WJ0603-05XX	WJ0703-02XX	WJ0703-05XX						
					WJ0403-03XX	WJ0403-06XX	WJ0503-03XX	WJ0503-06XX	WJ0603-03XX	WJ0603-06XX	WJ0703-03XX	WJ0703-06XX						
WJ0101-01XX																		
WJ0101-02XX																		
WJ0201-01XX																		
WJ0201-02XX																		
WJ0301-01XX																		
WJ0301-02XX																		
WJ0401-01XX					●													
WJ0401-02XX						●												
WJ0401-03XX					●													
WJ0401-04XX						●												
WJ0401-05XX					●													
WJ0401-06XX						●												
WJ0401-07XX					●													
WJ0401-08XX						●												
WJ0501-01XX							●											
WJ0501-02XX								●										
WJ0501-03XX							●											
WJ0501-04XX								●										
WJ0501-05XX							●											
WJ0501-06XX								●										
WJ0501-07XX							●											
WJ0501-08XX								●										
WJ0601-01XX									●									
WJ0601-02XX										●								
WJ0601-03XX									●									
WJ0601-04XX										●								
WJ0601-05XX									●									
WJ0601-06XX										●								
WJ0601-07XX									●									
WJ0601-08XX										●								
WJ0701-01XX	●	●									●							
WJ0701-02XX			●	●								●						
WJ0701-03XX	●	●									●							
WJ0701-04XX			●	●								●						
WJ0701-05XX	●	●									●							
WJ0701-06XX			●	●								●						
WJ0701-07XX	●	●									●							
WJ0701-08XX			●	●								●						

MCS多用途连接器互配选型参考表 MCS Terminal Block Matched Reference Table

Plugs \ MCS Headers	WJ0403-01XX	WJ0403-04XX	WJ0503-01XX	WJ0503-04XX	WJ0603-01XX	WJ0603-04XX	WJ0703-01XX	WJ0703-04XX	WJ0402-01XX	WJ0402-05XX	WJ0502-01XX	WJ0502-05XX	WJ0602-01XX	WJ0602-05XX	WJ0702-01XX	WJ0702-05XX		
	WJ0403-02XX	WJ0403-05XX	WJ0503-02XX	WJ0503-05XX	WJ0603-02XX	WJ0603-05XX	WJ0703-02XX	WJ0703-05XX	WJ0402-02XX	WJ0402-06XX	WJ0502-02XX	WJ0502-06XX	WJ0602-02XX	WJ0602-06XX	WJ0702-02XX	WJ0702-06XX		
	WJ0403-03XX	WJ0403-06XX	WJ0503-03XX	WJ0503-06XX	WJ0603-03XX	WJ0603-06XX	WJ0703-03XX	WJ0703-06XX	WJ0402-03XX	WJ0402-07XX	WJ0502-03XX	WJ0502-07XX	WJ0602-03XX	WJ0602-07XX	WJ0702-03XX	WJ0702-07XX		
									WJ0402-04XX	WJ0402-08XX	WJ0502-04XX	WJ0502-08XX	WJ0602-04XX	WJ0602-08XX	WJ0702-04XX	WJ0702-08XX		
WJ0405-01XX	●								●									
WJ0405-02XX		●								●								
WJ0405-03XX	●								●									
WJ0405-04XX		●								●								
WJ0505-01XX			●								●							
WJ0505-02XX				●								●						
WJ0505-03XX			●								●							
WJ0505-04XX				●								●						
WJ0605-01XX					●								●					
WJ0605-02XX						●								●				
WJ0605-03XX					●								●					
WJ0605-04XX						●								●				
WJ0705-01XX							●								●			
WJ0705-02XX								●								●		
WJ0705-03XX							●								●			
WJ0705-04XX								●								●		

www.china-wj.com

Terminal Block Professional Manufacturer



贯通式接线端子
FEED THROUGH TERMINAL BLOCK

贯通式接线端子，将二导体方便、可靠连接起来，可以连接截面为0.5mm²至16mm²的所有类型的导线，间距8.2mm至14.5mm可供选择，分带弹片与不带弹片两大类型。产品设计符合IEC60998、UL1059、UL486E、CSA C22.2 No.158等国际标准。

Feed through terminal blocks, connecting with two conductors easily and credibility, Provide the wire size from 0.5mm² to 16mm², Available with different pitches from 8.2mm to 14.5mm, Available for with fuse and without fuse. The product is designed in accordance with IEC 60998, UL1059, CSA C22.2 NO.158 standards.

ISO14001 ISO45001 ISO9001 ISO80079-34 ISO/TS 22163

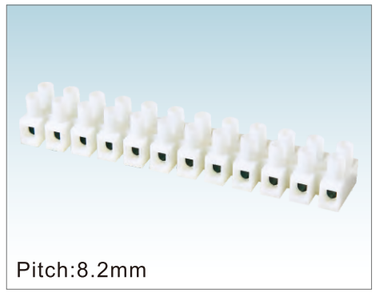

MODEL:MY8HS-1.2

认证/CERTIFICATION	
材质及电镀	
塑件	PA66,UL94V-2
螺丝	M2.5,钢，镀锌
压线柱	SPCC,镀锌
电气性能	
参考标准	UL IEC
额定电压	600V 450V
额定电流	20A 32A
使用线径	20~12AWG 4mm²
接触电阻	20mΩ
绝缘电阻	500MΩ/DC500V
耐电压	AC2200V/1Min
机械性能	
温度范围	-40℃~+105℃
扭矩	0.4Nm(3.6Lb.in)

MATERIAL	
Housing	PA66,UL94V-2
Screw	M2.5,Steel, Zn plated
Pressure line column	SPCC,Zn plated
ELECTRICAL	
Standard	UL IEC
Rated voltage	600V 450V
Rared current	20A 32A
Wire range	20~12AWG 4mm²
Contact resistance	20mΩ
Insulation resistance	500MΩ/DC500V
Withstanding voltage	AC2200V/1Min
MECHANICAL	
Temp. range	-40℃~+105℃
Torque	0.4Nm(3.6Lb.in)

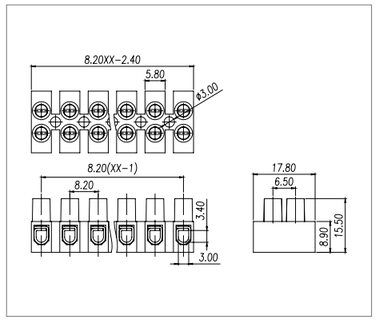

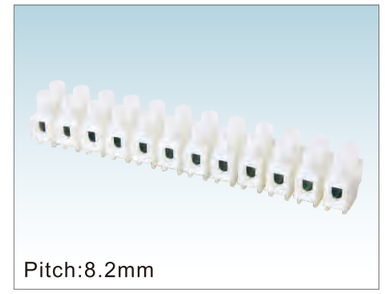

MODEL:MY8HS-4.3

认证/CERTIFICATION	
材质及电镀	
塑件	PA66,UL94V-2
螺丝	M2.5,钢，镀锌
压线柱	SPCC,镀锌
电气性能	
参考标准	UL IEC
额定电压	600V 450V
额定电流	20A 32A
使用线径	20~12AWG 4mm²
接触电阻	20mΩ
绝缘电阻	500MΩ/DC500V
耐电压	AC2200V/1Min
机械性能	
温度范围	-40℃~+105℃
扭矩	0.4Nm(3.6Lb.in)

MATERIAL	
Housing	PA66,UL94V-2
Screw	M2.5,Steel, Zn plated
Pressure line column	SPCC,Zn plated
ELECTRICAL	
Standard	UL IEC
Rated voltage	600V 450V
Rared current	20A 32A
Wire range	20~12AWG 4mm²
Contact resistance	20mΩ
Insulation resistance	500MΩ/DC500V
Withstanding voltage	AC2200V/1Min
MECHANICAL	
Temp. range	-40℃~+105℃
Torque	0.4Nm(3.6Lb.in)

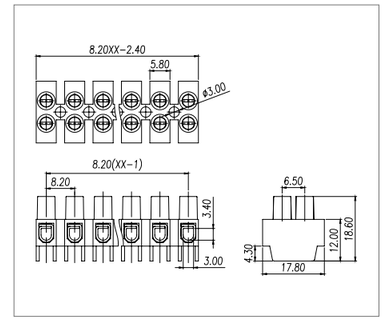

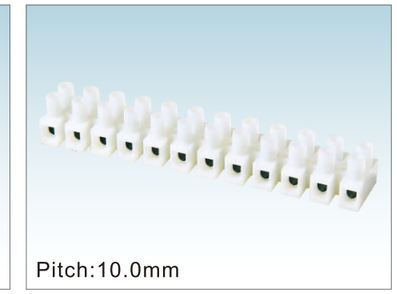

MODEL:MY10HS-1.2

认证/CERTIFICATION	
材质及电镀	
塑件	PA66,UL94V-2
螺丝	M3,钢，镀锌
铜柱	SPCC,镀锌
电气性能	
参考标准	UL IEC
额定电压	300V 450V
额定电流	30A 24A
使用线径	20~10AWG 2.5mm²
接触电阻	20mΩ
绝缘电阻	500MΩ/DC500V
耐电压	AC1600V/1Min
机械性能	
温度范围	-40℃~+105℃
扭矩	0.5Nm(4.4Lb.in)

MATERIAL	
Housing	PA66,UL94V-2
Screw	M3,Steel, Zn plated
Pressure line column	SPCC,Zn plated
ELECTRICAL	
Standard	UL IEC
Rated voltage	300V 450V
Rared current	30A 24A
Wire range	20~10AWG 2.5mm²
Contact resistance	20mΩ
Insulation resistance	500MΩ/DC500V
Withstanding voltage	AC1600V/1Min
MECHANICAL	
Temp. range	-40℃~+105℃
Torque	0.5Nm(4.4Lb.in)

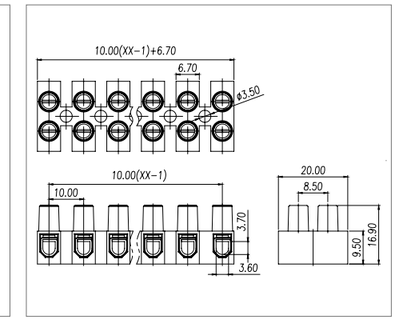

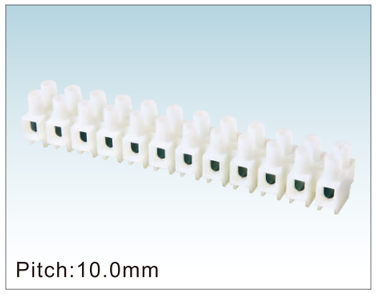

Pitch:10.0mm

MODEL:MY10HS-4.3

认证/CERTIFICATION	
材质及电镀	
塑件	PA66,UL94V-2
螺丝	M3,钢，镀锌
铜柱	SPCC,镀锌
电气性能	
参考标准	UL IEC
额定电压	600V 450V
额定电流	30A 24A
使用线径	20~10AWG 2.5mm²
接触电阻	20mΩ
绝缘电阻	500MΩ/DC500V
耐电压	AC1600V/1Min
机械性能	
温度范围	-40℃~+105℃
扭矩	0.5Nm(4.4Lb.in)

MATERIAL	
Housing	PA66,UL94V-2
Screw	M3,Steel, Zn plated
Pressure line column	SPCC,Zn plated
ELECTRICAL	
Standard	UL IEC
Rated voltage	600V 450V
Rared current	30A 24A
Wire range	20~10AWG 2.5mm²
Contact resistance	20mΩ
Insulation resistance	500MΩ/DC500V
Withstanding voltage	AC1600V/1Min
MECHANICAL	
Temp. range	-40℃~+105℃
Torque	0.5Nm(4.4Lb.in)

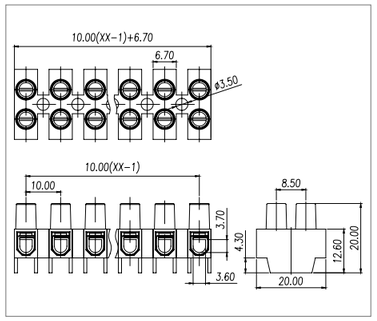

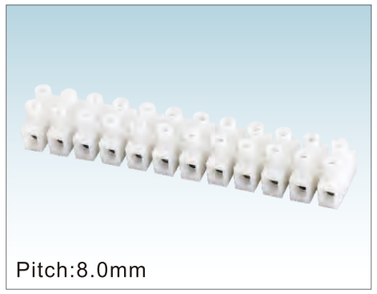

Pitch:8.0mm

MODEL:MY8H-1.2

认证/CERTIFICATION	
材质及电镀	
塑件	PA66,UL94V-2
螺丝	M2.5,钢，镀锌
铜柱	铜合金,镀镍
电气性能	
参考标准	UL IEC
额定电压	600V 450V
额定电流	20A 32A
使用线径	20~12AWG 4.0mm²
接触电阻	20mΩ
绝缘电阻	500MΩ/DC500V
耐电压	AC2200V/1Min
机械性能	
温度范围	-40℃~+105℃
扭矩	0.4Nm/3.6Lb.in/4.08Kgf.cm

MATERIAL	
Housing	PA66,UL94V-2
Screw	M2.5,Steel, Zn plated
Pressure line column	Copper alloy,Ni plated
ELECTRICAL	
Standard	UL IEC
Rated voltage	600V 450V
Rared current	20A 32A
Wire range	20~12AWG 4.0mm²
Contact resistance	20mΩ
Insulation resistance	500MΩ/DC500V
Withstanding voltage	AC2200V/1Min
MECHANICAL	
Temp. range	-40℃~+105℃
Torque	0.4Nm/3.6Lb.in/4.08Kgf.cm

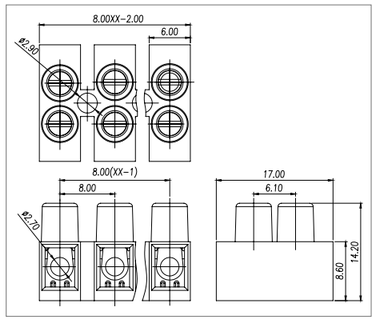

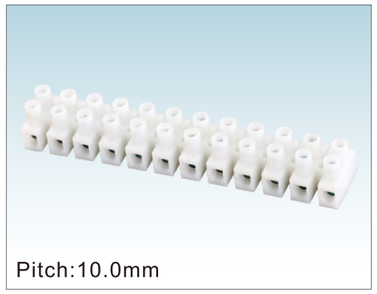

Pitch:10.0mm

MODEL:MY10H-1.2

认证/CERTIFICATION	
材质及电镀	
塑件	PA66,UL94V-2
螺丝	M3,钢，镀锌
铜柱	铜合金,镀锌
电气性能	
参考标准	UL IEC
额定电压	300V 450V
额定电流	30A 24A
使用线径	20~10AWG 2.5mm²
接触电阻	20mΩ
绝缘电阻	500MΩ/DC500V
耐电压	AC1600V/1Min
机械性能	
温度范围	-40℃~+105℃
扭矩	0.5Nm(4.4Lb.in)

MATERIAL	
Housing	PA66,UL94V-2
Screw	M3,Steel, Zn plated
Pressure line column	Copper alloy,Zn plated
ELECTRICAL	
Standard	UL IEC
Rated voltage	300V 450V
Rared current	30A 24A
Wire range	20~10AWG 2.5mm²
Contact resistance	20mΩ
Insulation resistance	500MΩ/DC500V
Withstanding voltage	AC1600V/1Min
MECHANICAL	
Temp. range	-40℃~+105℃
Torque	0.5Nm(4.4Lb.in)

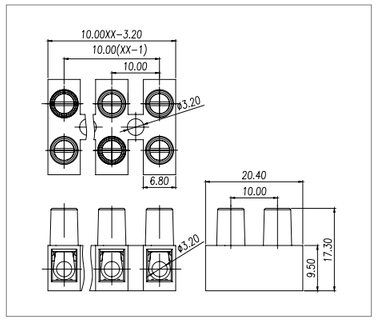

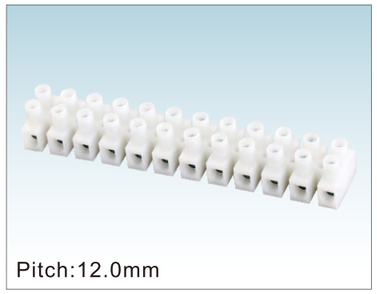

Pitch:12.0mm

MODEL:MY12H-1.2

认证/CERTIFICATION	
材质及电镀	
塑件	PA66,UL94V-2
螺丝	M3.5,钢，镀锌
铜柱	铜合金,镀镍
电气性能	
参考标准	UL IEC
额定电压	600V 750V
额定电流	50A 41A
使用线径	20~8AWG 6.0mm²
接触电阻	20mΩ
绝缘电阻	500MΩ/DC500V
耐电压	AC2200V/1Min
机械性能	
温度范围	-40℃~+105℃
扭矩	0.8Nm(7.2Lb.in)

MATERIAL	
Housing	PA66,UL94V-2
Screw	M3.5,Steel, Zn plated
Pressure line column	Copper alloy,Ni plated
ELECTRICAL	
Standard	UL IEC
Rated voltage	600V 750V
Rared current	50A 57A
Wire range	20~8AWG 6.0mm²
Contact resistance	20mΩ
Insulation resistance	500MΩ/DC500V
Withstanding voltage	AC2200V/1Min
MECHANICAL	
Temp. range	-40℃~+105℃
Torque	0.8Nm(7.2Lb.in)

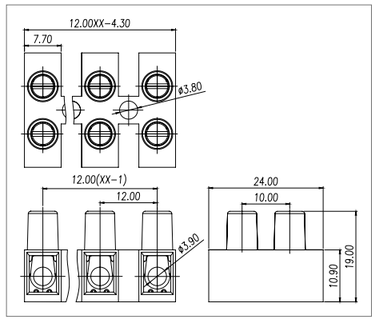

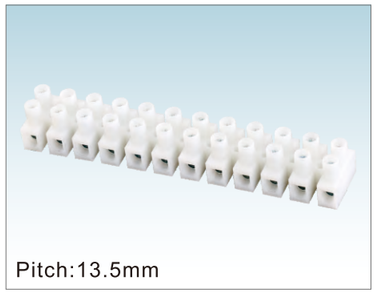

Pitch:13.5mm

MODEL:MY14H-1.2

认证/CERTIFICATION	
材质及电镀	
塑件	PA66,UL94V-2
螺丝	M4,钢，镀锌
铜柱	铜合金,镀镍
电气性能	
参考标准	UL IEC
额定电压	600V 750V
额定电流	50A 57A
使用线径	20~8AWG 10mm²
接触电阻	20mΩ
绝缘电阻	500MΩ/DC500V
耐电压	AC2500V/1Min
机械性能	
温度范围	-40℃~+105℃
扭矩	1.2Nm(10.8Lb.in)

MATERIAL	
Housing	PA66,UL94V-2
Screw	M4,Steel, Zn plated
Pressure line column	Copper alloy,Ni plated
ELECTRICAL	
Standard	UL IEC
Rated voltage	600V 750V
Rared current	50A 57A
Wire range	20~8AWG 10mm²
Contact resistance	20mΩ
Insulation resistance	500MΩ/DC500V
Withstanding voltage	AC2500V/1Min
MECHANICAL	
Temp. range	-40℃~+105℃
Torque	1.2Nm(10.8Lb.in)

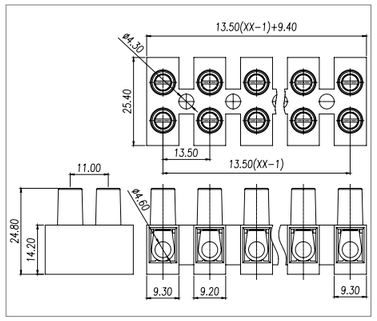

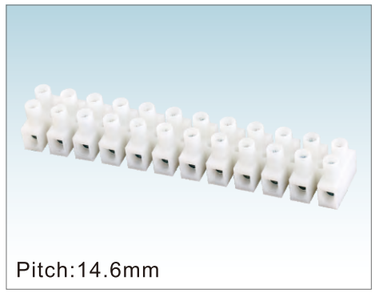

Pitch:14.6mm

MODEL:MY16H-1.2

认证/CERTIFICATION	
材质及电镀	
塑件	PA66,UL94V-2
螺丝	M4,钢，镀锌
铜柱	铜合金,镀镍
电气性能	
参考标准	UL IEC
额定电压	600V 750V
额定电流	65A 76A
使用线径	20~6AWG 16.0mm²
接触电阻	20mΩ
绝缘电阻	500MΩ/DC500V
耐电压	AC2200V/1Min
机械性能	
温度范围	-40℃~+105℃
扭矩	1.2Nm(10.8Lb.in)

MATERIAL	
Housing	PA66,UL94V-2
Screw	M4,Steel, Zn plated
Pressure line column	Copper alloy,Ni plated
ELECTRICAL	
Standard	UL IEC
Rated voltage	600V 750V
Rared current	65A 76A
Wire range	20~6AWG 16.0mm²
Contact resistance	20mΩ
Insulation resistance	500MΩ/DC500V
Withstanding voltage	AC2200V/1Min
MECHANICAL	
Temp. range	-40℃~+105℃
Torque	1.2Nm10.8Lb.in)

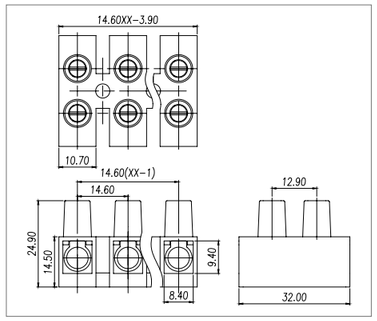

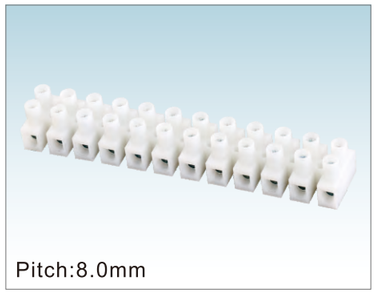

MODEL:MY8HW-1.2

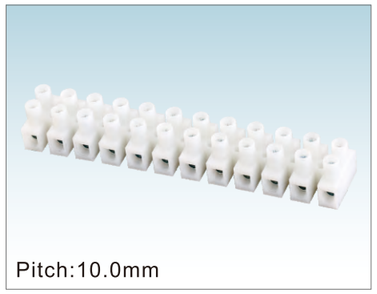

MODEL:MY10HW-1.2

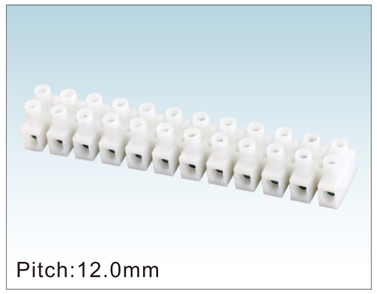

MODEL:MY12HW-1.2

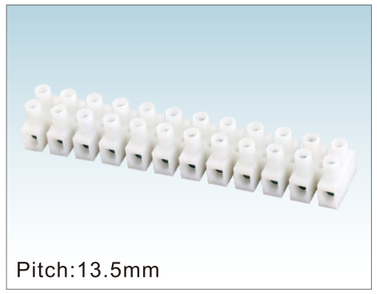

MODEL:MY14HW-1.2

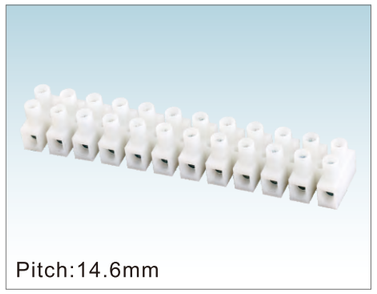

MODEL:MY16HW-1.2

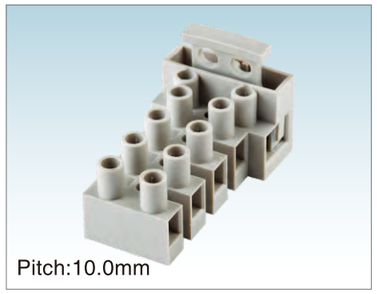

MY510

认证/CERTIFICATION	
材质及电镀	
塑件	PA66,UL94V-2
螺丝	M2.5,钢，镀锌
铜柱	铜合金,镀镍
电气性能	
参考标准	UL IEC
额定电压	600V 450V
额定电流	20A 32A
使用线径	20~12AWG 2.5mm²
接触电阻	20mΩ
绝缘电阻	500MΩ/DC500V
耐电压	AC2200V/1Min
机械性能	
温度范围	-40℃~+105℃
扭矩	0.4Nm(3.6Lb.in)

MATERIAL	
Housing	PA66,UL94V-2
Screw	M2.5,Steel, Zn plated
Pressure line column	Copper alloy,Ni plated
ELECTRICAL	
Standard	UL IEC
Rated voltage	600V 450V
Rared current	20A 32A
Wire range	20~12AWG 2.5mm²
Contact resistance	20mΩ
Insulation resistance	500MΩ/DC500V
Withstanding voltage	AC2200V/1Min
MECHANICAL	
Temp. range	-40℃~+105℃
Torque	0.4Nm(3.6Lb.in)

认证/CERTIFICATION	
材质及电镀	
塑件	PA66,UL94V-2
螺丝	M3,钢，镀锌
铜柱	铜合金,镀镍
电气性能	
参考标准	UL IEC
额定电压	300V 450V
额定电流	30A 24A
使用线径	20~10AWG 4.0mm²
接触电阻	20mΩ
绝缘电阻	500MΩ/DC500V
耐电压	AC1600V/1Min
机械性能	
温度范围	-40℃~+105℃
扭矩	0.5Nm/4.5Lb.in/5.1Kgf.cm

MATERIAL	
Housing	PA66,UL94V-2
Screw	M3,Steel, Zn plated
Pressure line column	Copper alloy,Ni plated
ELECTRICAL	
Standard	UL IEC
Rated voltage	300V 450V
Rared current	30A 24A
Wire range	20~10AWG 2.5mm²
Contact resistance	20mΩ
Insulation resistance	500MΩ/DC500V
Withstanding voltage	AC1600V/1Min
MECHANICAL	
Temp. range	-40℃~+105℃
Torque	0.5Nm/4.5Lb.in/5.1Kgf.cm

认证/CERTIFICATION	
材质及电镀	
塑件	PA66,UL94V-2
螺丝	M3.5,钢，镀锌
铜柱	铜合金,镀镍
电气性能	
参考标准	UL IEC
额定电压	600V 750V
额定电流	50A 41A
使用线径	20~8AWG 6.0mm²
接触电阻	20mΩ
绝缘电阻	500MΩ/DC500V
耐电压	AC2200V/1Min
机械性能	
温度范围	-40℃~+105℃
扭矩	0.8Nm(7.2Lb.in)

MATERIAL	
Housing	PA66,UL94V-2
Screw	M3.5,Steel, Zn plated
Pressure line column	Copper alloy,Ni plated
ELECTRICAL	
Standard	UL IEC
Rated voltage	600V 750V
Rared current	50A 41A
Wire range	20~8AWG 6.0mm²
Contact resistance	20mΩ
Insulation resistance	500MΩ/DC500V
Withstanding voltage	AC2200V/1Min
MECHANICAL	
Temp. range	-40℃~+105℃
Torque	0.8Nm(7.2Lb.in)

认证/CERTIFICATION	
材质及电镀	
塑件	PA66,UL94V-2
螺丝	M4,钢，镀锌
铜柱	铜合金,镀镍
电气性能	
参考标准	UL IEC
额定电压	600V 750V
额定电流	50A 57A
使用线径	20~8AWG 10mm²
接触电阻	20mΩ
绝缘电阻	500MΩ/DC500V
耐电压	AC2500V/1Min
机械性能	
温度范围	-40℃~+105℃
扭矩	1.2Nm(10.8Lb.in)

MATERIAL	
Housing	PA66,UL94V-2
Screw	M4,Steel, Zn plated
Pressure line column	Copper alloy,Ni plated
ELECTRICAL	
Standard	UL IEC
Rated voltage	600V 750V
Rared current	50A 57A
Wire range	20~8AWG 10mm²
Contact resistance	20mΩ
Insulation resistance	500MΩ/DC500V
Withstanding voltage	AC2500V/1Min
MECHANICAL	
Temp. range	-40℃~+105℃
Torque	1.2Nm(10.8Lb.in)

认证/CERTIFICATION	
材质及电镀	
塑件	PA66,UL94V-2
螺丝	M5,钢，镀锌
铜柱	铜合金,镀镍
电气性能	
参考标准	UL IEC
额定电压	600V 750V
额定电流	65A 76A
使用线径	20~6AWG 16.0mm²
接触电阻	20mΩ
绝缘电阻	500MΩ/DC500V
耐电压	AC2500V/1Min
机械性能	
温度范围	-40℃~+105℃
扭矩	1.5Nm/13Lb.in/15.3Kgf.cm

MATERIAL	
Housing	PA66,UL94V-2
Screw	M5,Steel, Zn plated
Pressure line column	Copper alloy,Ni plated
ELECTRICAL	
Standard	UL IEC
Rated voltage	600V 750V
Rared current	65A 76A
Wire range	20~6AWG 16.0mm²
Contact resistance	20mΩ
Insulation resistance	500MΩ/DC500V
Withstanding voltage	AC2500V/1Min
MECHANICAL	
Temp. range	-40℃~+105℃
Torque	1.5Nm/13Lb.in/15.3Kgf.cm

认证/CERTIFICATION	
材质及电镀	
塑件	PA66,UL94V-0
螺丝	M3 ,钢，镀锌
铜柱	铜合金,镀镍
电气性能	
参考标准	UL
额定电压	300V
额定电流	15A
使用线径	22~14AWG
接触电阻	20mΩ
绝缘电阻	500MΩ/DC500V
耐电压	AC1600V/1Min
机械性能	
温度范围	-40℃~+105℃
扭矩	0.5Nm/4.4Lb.in/5.1Kgf.cm

MATERIAL	
Housing	PA66,UL94V-0
Screw	M3 ,Steel, Zn plated
Pressure line column	Copper alloy,Ni plated
ELECTRICAL	
Standard	UL
Rated voltage	300V
Rared current	15A
Wire range	22~14AWG
Contact resistance	20mΩ
Insulation resistance	500MΩ/DC500V
Withstanding voltage	AC1600V/1Min
MECHANICAL	
Temp. range	-40℃~+105℃
Torque	0.5Nm/4.4Lb.in/5.1Kgf.cm

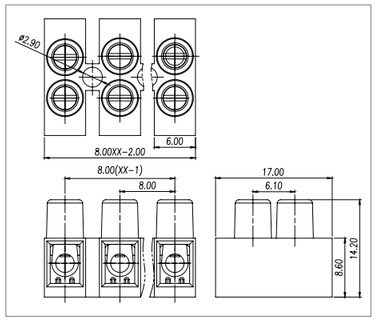

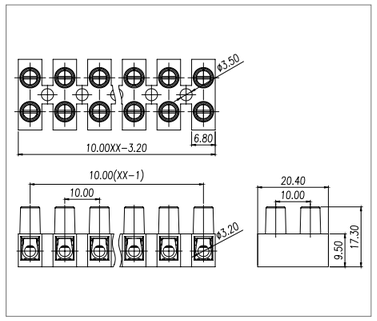

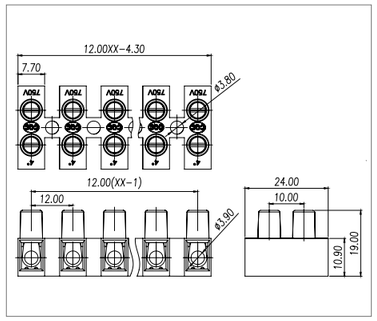

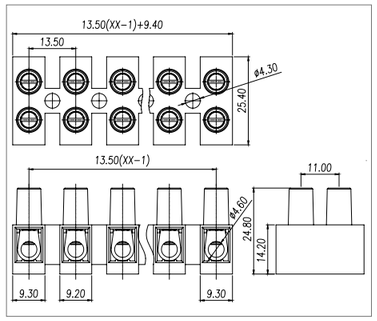

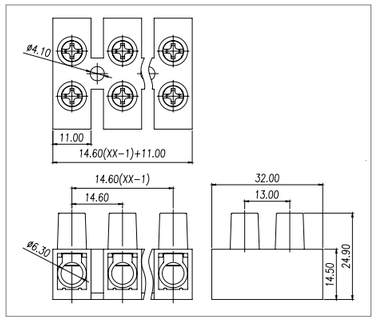

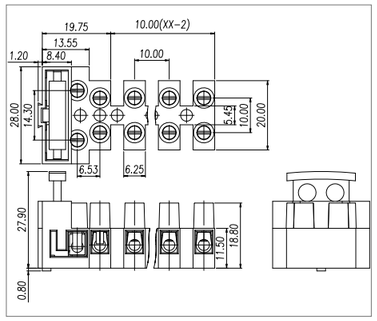

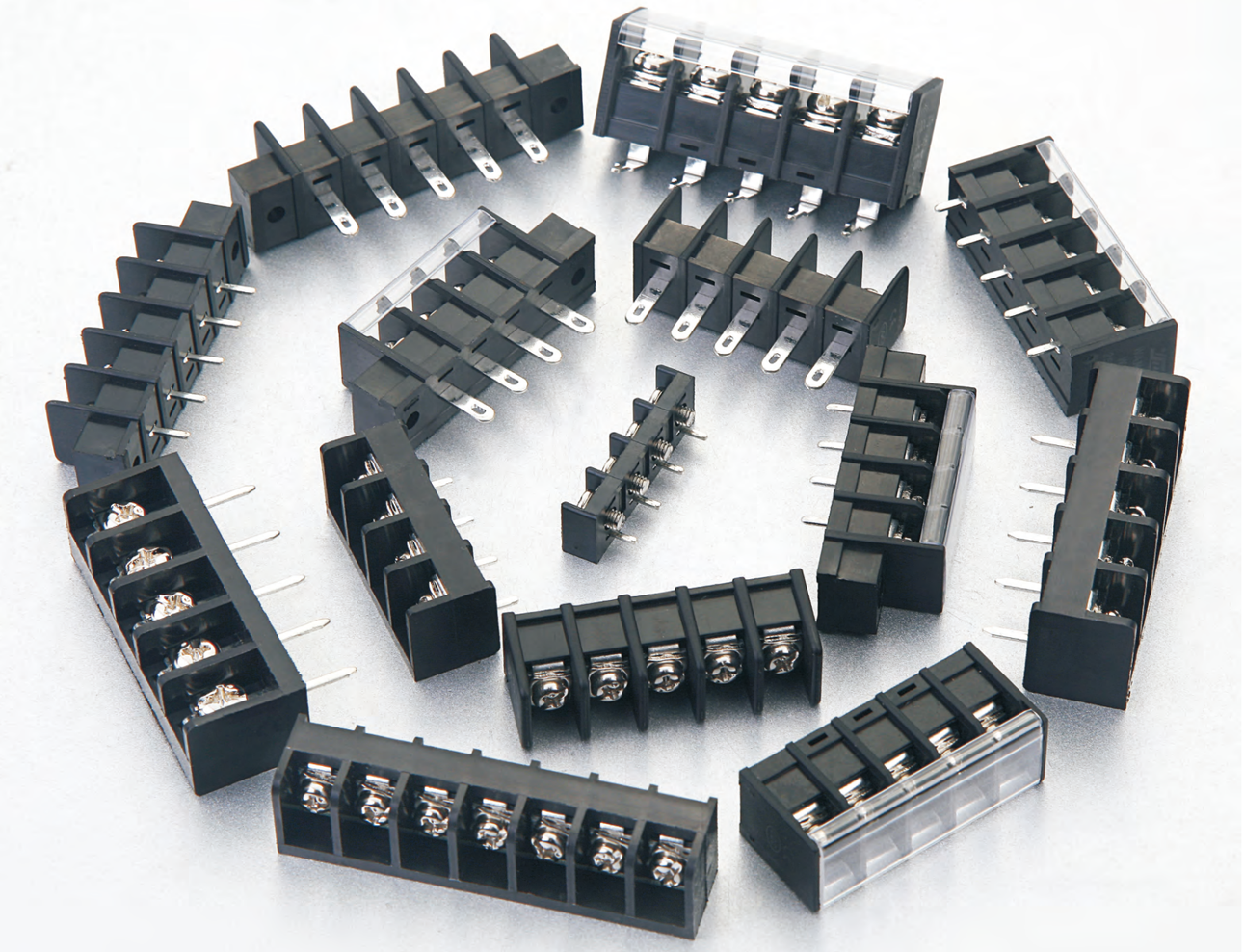

栅栏式接线端子
BARRIER TERMINAL BLOCK

栅栏式接线端子，接线直观明了，可以连接截面为0.5mm²至50mm²的所有类型的导线，间距6.35–27mm可供选择，可提供有盖、无盖，有无固定孔等款式。产品设计符合IEC60998、UL1059、UL486E、CSA C22.2 No.158等国际标准。

Barrier terminal blocks, connecting easily, provide the size from 0.5mm² to 50 mm², Available with different pitches from 6.35mm to 27.0mm. with cover and without cover. The product is designed in accordance with IEC 60998, UL1059, CSA C22.2 NO.158 standards.

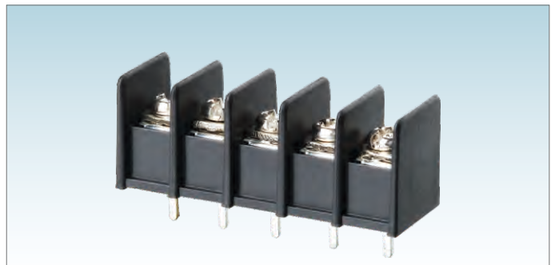

MODEL: WJ25C

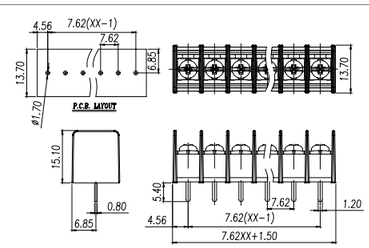

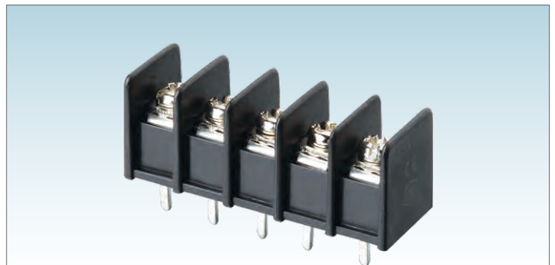

MODEL: WJ25S

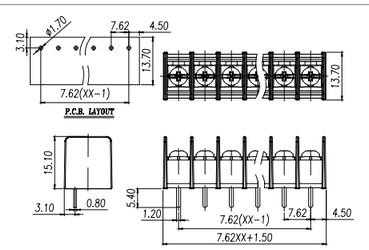



MODEL: WJ25H

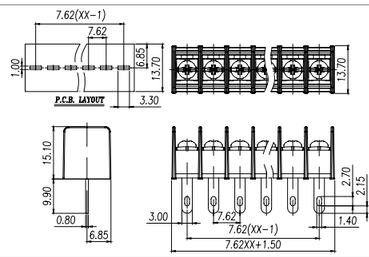



MODEL: WJ25R

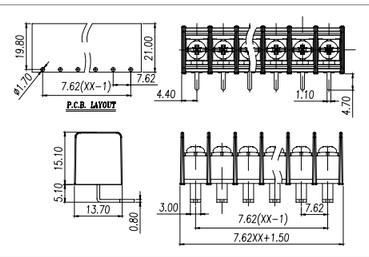

材质及电镀	
螺丝	M3.0, 钢, 镀镍
焊脚	铜合金, 镀锡
塑件	PA66, UL94V–0

电气性能		
参考标准	UL	IEC
额定电压	300V	250V
额定电流	15A	17.5A
使用线径	22–14AWG	1.5mm²
接触电阻	20mΩ	
绝缘电阻	500MΩ/DC500V	
耐电压	AC2000V/1Min	
温度范围	–40℃~+105℃	
扭矩	5.10kgf–cm/0.5Nm/4.43Lbin	

MATERIAL	
Screw	M3.0 Steel Ni plated
Pin Header	Copper alloy, Sn plated
Housing	PA66, UL94V–0

ELECTRICAL		
Standard	UL	IEC
Rated voltage	300V	250V
Rated current	15A	17.5A
Wire range	22–14AWG	1.5mm²
Contact resistance	20mΩ	
Insulation resistance	500MΩ/DC500V	
Withstanding voltage	AC2000V/1Min	
Temp. range	–40℃~+105℃	
Torque	5.10kgf–cm/0.5Nm/4.43Lbin	

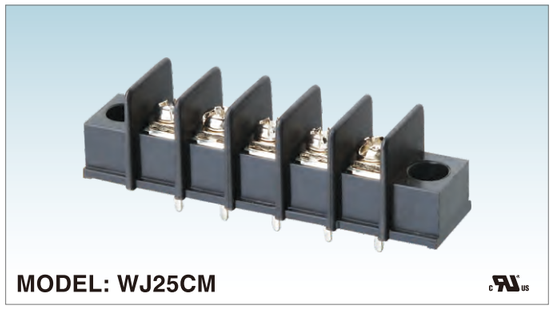

MODEL: WJ25CM

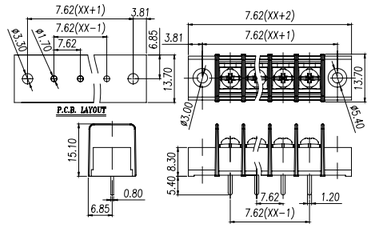

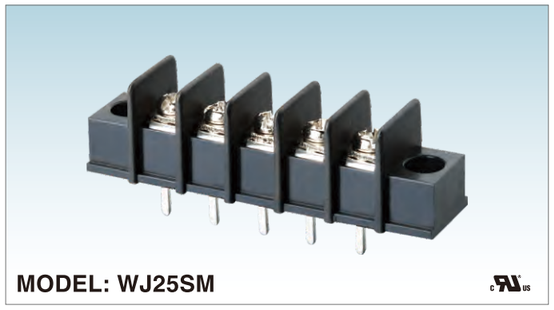

MODEL: WJ25SM

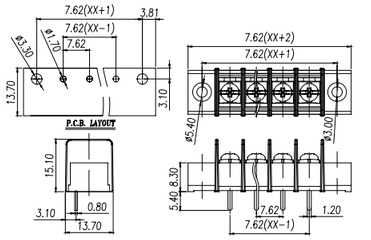



MODEL: WJ35C

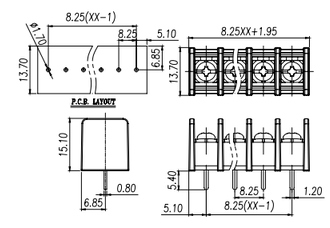

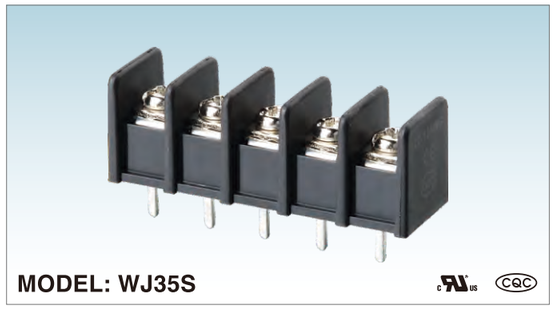

MODEL: WJ35S

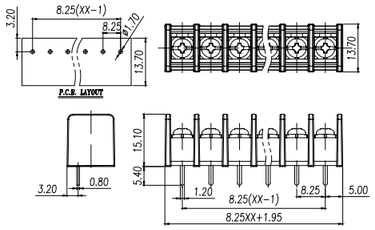

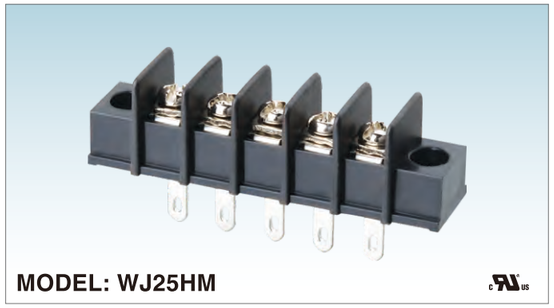

MODEL: WJ25HM

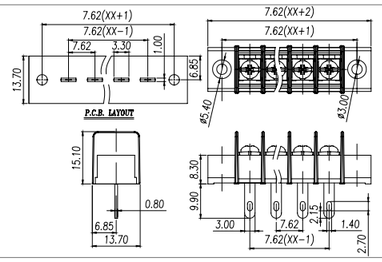

材质及电镀	
螺丝	M3.0, 钢, 镀镍
焊脚	铜合金, 镀锡
塑件	PA66, UL94V-0

电气性能		
参考标准	UL	IEC
额定电压	300V	250V
额定电流	15A	17.5A
使用线径	22-14AWG	1.5mm²
接触电阻	20mΩ	
绝缘电阻	500MΩ/DC500V	
耐电压	AC2000V/1Min	
温度范围	-40℃~+105℃	
扭矩	5.10kgf-cm/0.5Nm/4.43Lbin	

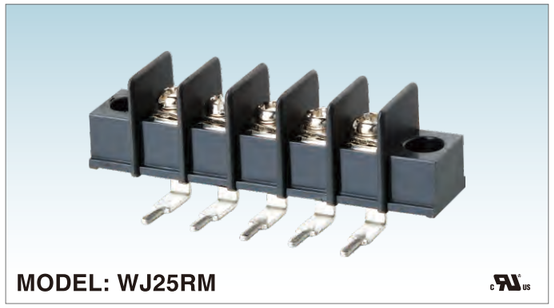

MODEL: WJ25RM

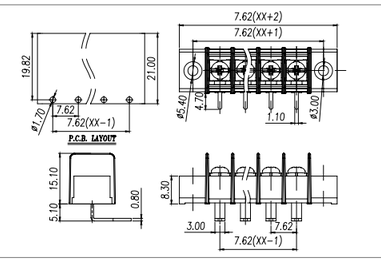

MATERIAL	
Screw	M3.0 Steel Ni plated
Pin Header	Copper alloy, Sn plated
Housing	PA66, UL94V-0

ELECTRICAL		
Standard	UL	IEC
Rated voltage	300V	250V
Rated current	15A	17.5A
Wire range	22-14AWG	1.5mm²
Contact resistance	20mΩ	
Insulation resistance	500MΩ/DC500V	
Withstanding voltage	AC2000V/1Min	
Temp. range	-40℃~+105℃	
Torque	5.10kgf-cm/0.5Nm/4.43Lbin	

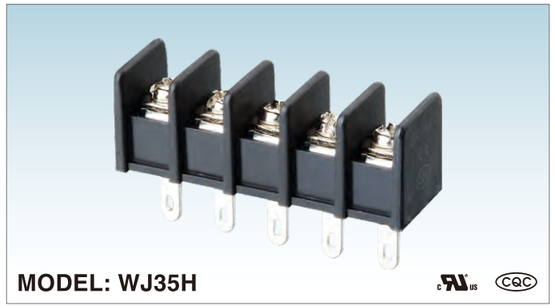

MODEL: WJ35H

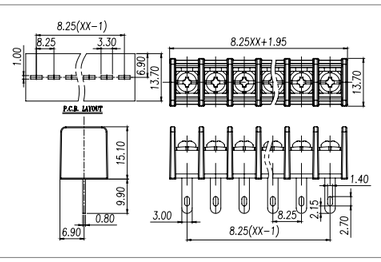

材质及电镀	
螺丝	M3.0, 钢, 镀镍
焊脚	铜合金, 镀锡
塑件	PA66, UL94V-0

电气性能		
参考标准	UL	IEC
额定电压	300V	250V
额定电流	20A	24A
使用线径	22-12AWG	2.5mm²
接触电阻	20mΩ	
绝缘电阻	500MΩ/DC500V	
耐电压	AC2000V/1Min	
温度范围	-40℃~+105℃	
扭矩	5.10kgf-cm/0.5Nm/4.43Lbin	

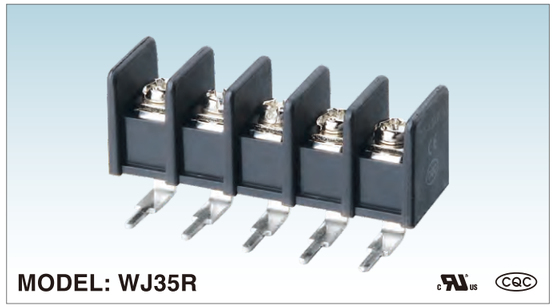

MODEL: WJ35R

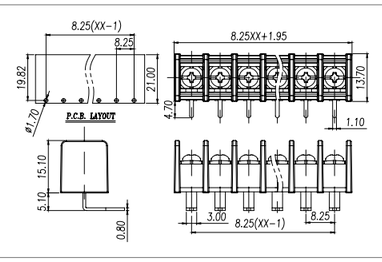

MATERIAL	
Screw	M3.0 Steel Ni plated
Pin Header	Copper alloy, Sn plated
Housing	PA66, UL94V-0

ELECTRICAL		
Standard	UL	IEC
Rated voltage	300V	250V
Rated current	20A	24A
Wire range	22-12AWG	2.5mm²
Contact resistance	20mΩ	
Insulation resistance	500MΩ/DC500V	
Withstanding voltage	AC2000V/1Min	
Temp. range	-40℃~+105℃	
Torque	5.10kgf-cm/0.5Nm/4.43Lbin	

ISO14001 ISO45001 ISO9001 ISO80079-34 ISO/TS 22163

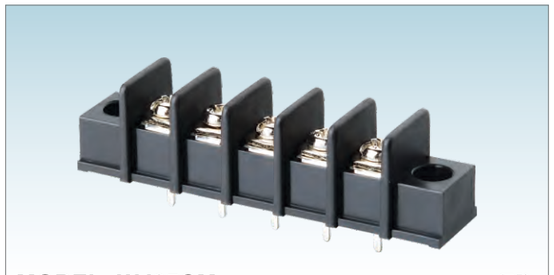

MODEL: WJ35CM

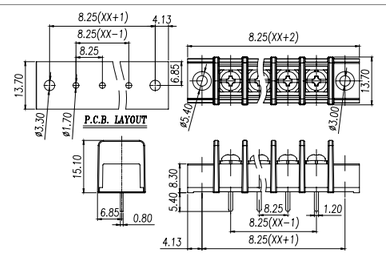

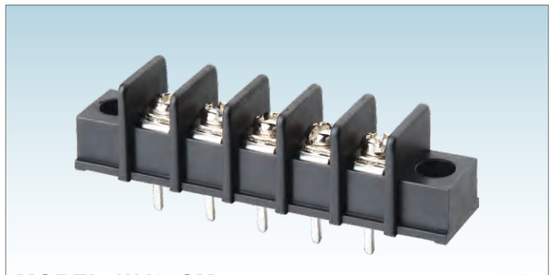

MODEL: WJ35SM

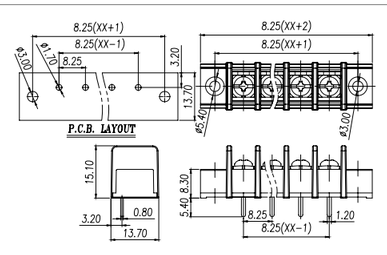

材质及电镀	
螺丝	M3.0, 钢, 镀镍
焊脚	铜合金, 镀锡
塑件	PA66, UL94V-0

电气性能		
参考标准	UL	IEC
额定电压	300V	250V
额定电流	20A	24A
使用线径	22-12AWG	2.5mm²
接触电阻	20mΩ	
绝缘电阻	500MΩ/DC500V	
耐电压	AC2000V/1Min	
温度范围	-40℃~+105℃	
扭矩	5.10kgf-cm/0.5Nm/4.43Lbin	

MATERIAL	
Screw	M3.0 Steel Ni plated
Pin Header	Copper alloy, Sn plated
Housing	PA66, UL94V-0

ELECTRICAL		
Standard	UL	IEC
Rated voltage	300V	250V
Rated current	20A	24A
Wire range	22-12AWG	2.5mm²
Contact resistance	20mΩ	
Insulation resistance	500MΩ/DC500V	
Withstanding voltage	AC2000V/1Min	
Temp. range	-40℃~+105℃	
Torque	5.10kgf-cm/0.5Nm/4.43Lbin	

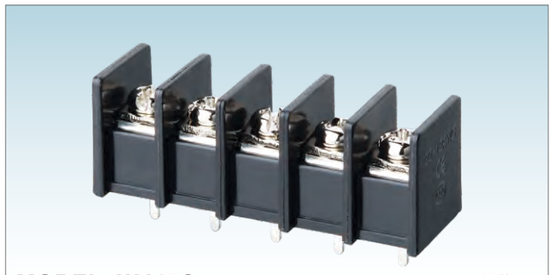

MODEL: WJ45C

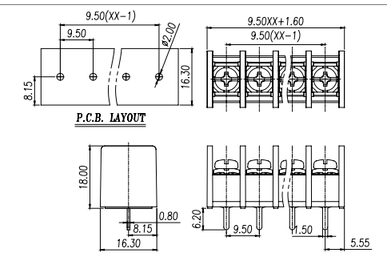

材质及电镀	
螺丝	M4.0, 钢, 镀镍
焊脚	铜合金, 镀锡
塑件	PA66, UL94V-0

电气性能		
参考标准	UL	IEC
额定电压	300V	400V
额定电流	20A	24A
使用线径	22-12AWG	2.5mm²
接触电阻	20mΩ	
绝缘电阻	500MΩ/DC500V	
耐电压	AC2000V/1Min	
温度范围	-40℃~+105℃	
扭矩	12.24kgf-cm/1.2Nm/10.6Lbin	

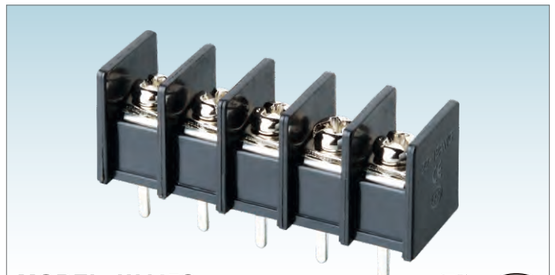

MODEL: WJ45S

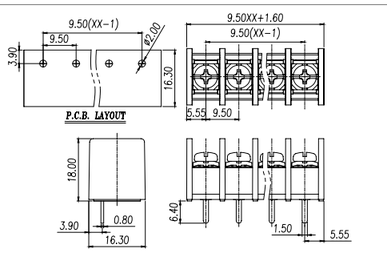

MATERIAL	
Screw	M4.0 Steel Ni plated
Pin Header	Copper alloy, Sn plated
Housing	PA66, UL94V-0

ELECTRICAL		
Standard	UL	IEC
Rated voltage	300V	400V
Rated current	20A	24A
Wire range	22-12AWG	2.5mm²
Contact resistance	20mΩ	
Insulation resistance	500MΩ/DC500V	
Withstanding voltage	AC2000V/1Min	
Temp. range	-40℃~+105℃	
Torque	12.24kgf-cm/1.2Nm/10.6Lbin	

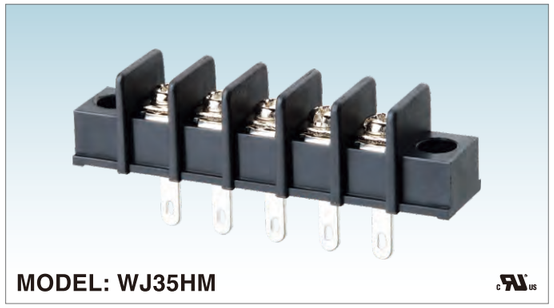

MODEL: WJ35HM

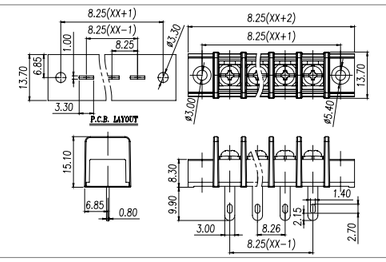

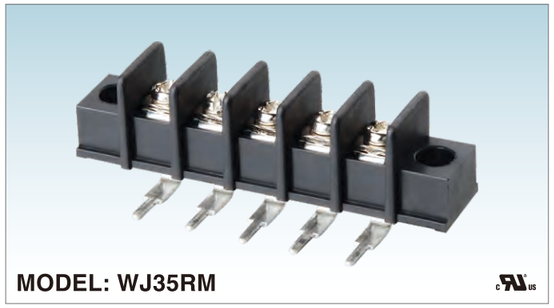

MODEL: WJ35RM

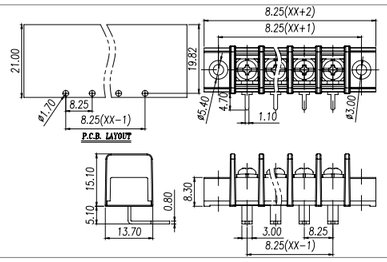

材质及电镀	
螺丝	M3.0, 钢, 镀镍
焊脚	铜合金, 镀锡
塑件	PA66, UL94V-0

电气性能		
参考标准	UL	IEC
额定电压	300V	250V
额定电流	20A	24A
使用线径	22-12AWG	2.5mm²
接触电阻	20mΩ	
绝缘电阻	500MΩ/DC500V	
耐电压	AC2000V/1Min	
温度范围	-40℃~+105℃	
扭矩	5.10kgf-cm/0.5Nm/4.43Lbin	

MATERIAL	
Screw	M3.0 Steel Ni plated
Pin Header	Copper alloy, Sn plated
Housing	PA66, UL94V-0

ELECTRICAL		
Standard	UL	IEC
Rated voltage	300V	250V
Rated current	20A	24A
Wire range	22-12AWG	2.5mm²
Contact resistance	20mΩ	
Insulation resistance	500MΩ/DC500V	
Withstanding voltage	AC2000V/1Min	
Temp. range	-40℃~+105℃	
Torque	5.10kgf-cm/0.5Nm/4.43Lbin	

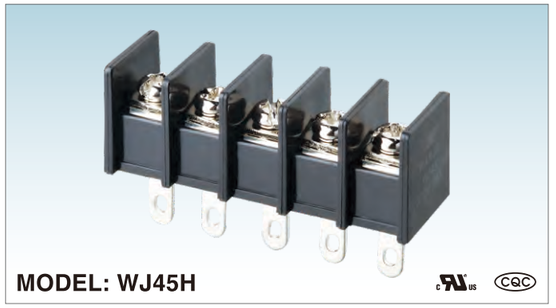

MODEL: WJ45H

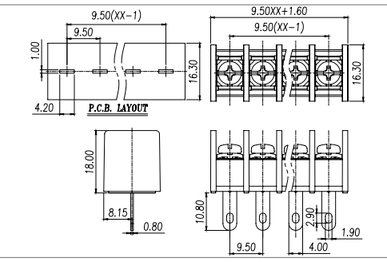

材质及电镀	
螺丝	M4.0, 钢, 镀镍
焊脚	铜合金, 镀锡
塑件	PA66, UL94V-0

电气性能		
参考标准	UL	IEC
额定电压	300V	400V
额定电流	20A	24A
使用线径	22-12AWG	2.5mm²
接触电阻	20mΩ	
绝缘电阻	500MΩ/DC500V	
耐电压	AC2000V/1Min	
温度范围	-40℃~+105℃	
扭矩	12.24kgf-cm/1.2Nm/10.6Lbin	

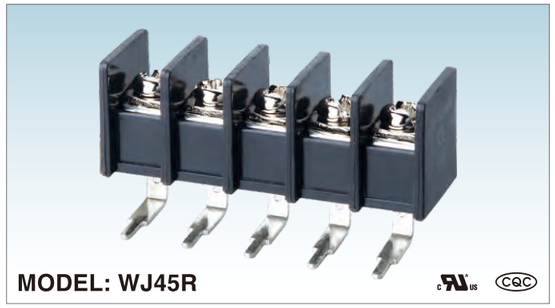

MODEL: WJ45R

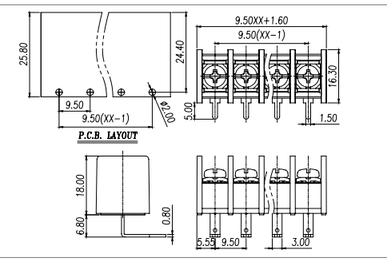

MATERIAL	
Screw	M4.0 Steel Ni plated
Pin Header	Copper alloy, Sn plated
Housing	PA66, UL94V-0

ELECTRICAL		
Standard	UL	IEC
Rated voltage	300V	400V
Rated current	20A	24A
Wire range	22-12AWG	2.5mm²
Contact resistance	20mΩ	
Insulation resistance	500MΩ/DC500V	
Withstanding voltage	AC2000V/1Min	
Temp. range	-40℃~+105℃	
Torque	12.24kgf-cm/1.2Nm/10.6Lbin	

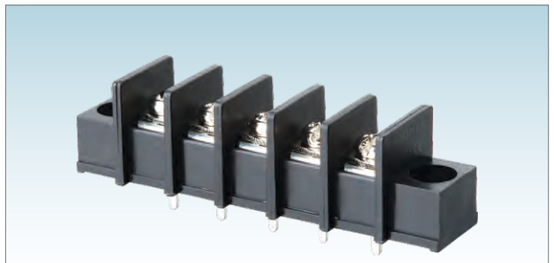

MODEL: WJ45CM

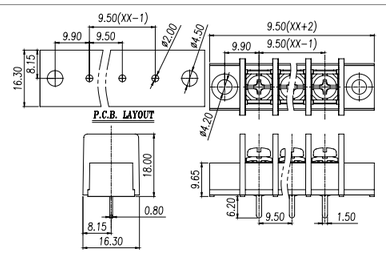

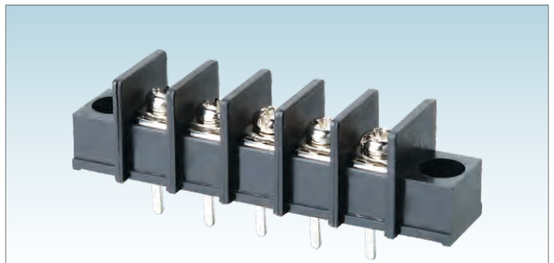

MODEL: WJ45SM

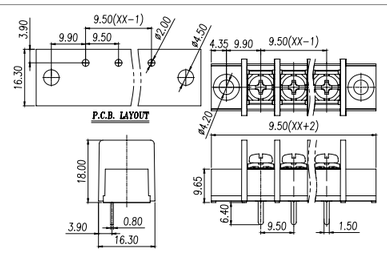



MODEL: WJ45HM

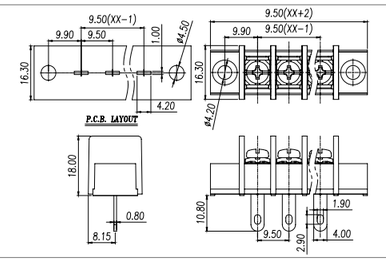

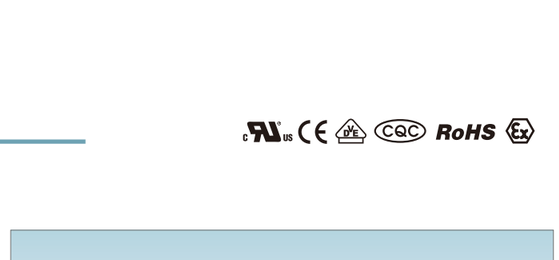

MODEL: WJ45RM

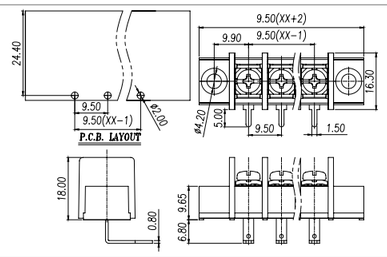

材质及电镀	
螺丝	M4.0, 钢, 镀镍
焊脚	铜合金, 镀锡
塑件	PA66, UL94V-0

电气性能		
参考标准	UL	IEC
额定电压	300V	400V
额定电流	20A	24A
使用线径	22-12AWG	2.5mm²
接触电阻	20mΩ	
绝缘电阻	500MΩ/DC500V	
耐电压	AC2000V/1Min	
温度范围	-40℃~+105℃	
扭矩	12.24kgf-cm/1.2Nm/10.6Lbin	

MATERIAL	
Screw	M4.0 Steel Ni plated
Pin Header	Copper alloy, Sn plated
Housing	PA66, UL94V-0

ELECTRICAL		
Standard	UL	IEC
Rated voltage	300V	400V
Rated current	20A	24A
Wire range	22-12AWG	2.5mm²
Contact resistance	20mΩ	
Insulation resistance	500MΩ/DC500V	
Withstanding voltage	AC2000V/1Min	
Temp. range	-40℃~+105℃	
Torque	12.24kgf-cm/1.2Nm/10.6Lbin	

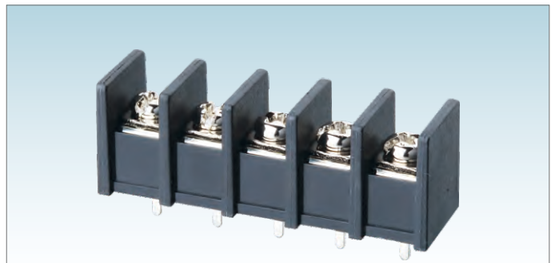

MODEL: WJ55C

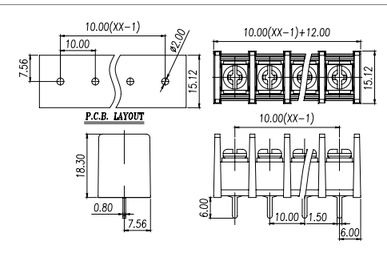

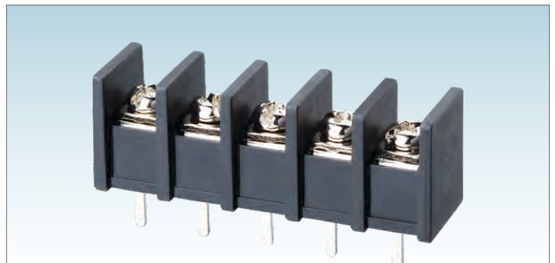

MODEL: WJ55S

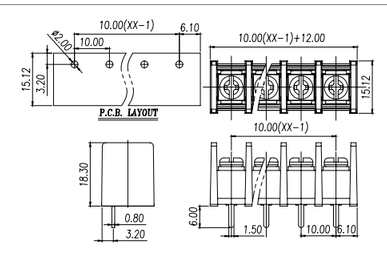



MODEL: WJ55H

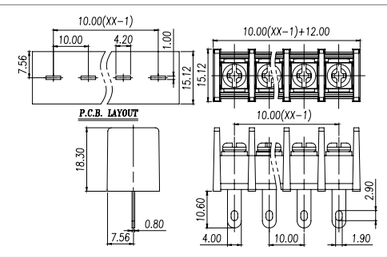

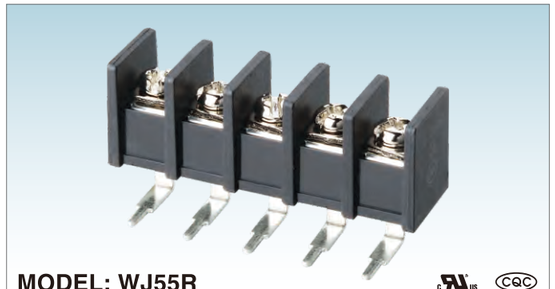

MODEL: WJ55R

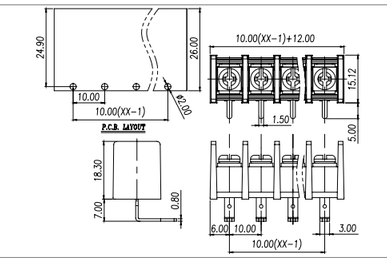

材质及电镀	
螺丝	M4.0, 钢, 镀镍
焊脚	铜合金, 镀锡
塑件	PA66, UL94V-0

电气性能		
参考标准	UL	IEC
额定电压	300V	400V
额定电流	20A	24A
使用线径	22-12AWG	2.5mm²
接触电阻	20mΩ	
绝缘电阻	500MΩ/DC500V	
耐电压	AC2000V/1Min	
温度范围	-40℃~+105℃	
扭矩	12.24kgf-cm/1.2Nm/10.6Lbin	

MATERIAL	
Screw	M4.0 Steel Ni plated
Pin Header	Copper alloy, Sn plated
Housing	PA66, UL94V-0

ELECTRICAL		
Standard	UL	IEC
Rated voltage	300V	400V
Rated current	20A	24A
Wire range	22-12AWG	2.5mm²
Contact resistance	20mΩ	
Insulation resistance	500MΩ/DC500V	
Withstanding voltage	AC2000V/1Min	
Temp. range	-40℃~+105℃	
Torque	12.24kgf-cm/1.2Nm/10.6Lbin	

ISO14001 ISO45001 ISO9001 ISO80079-34 ISO/TS 22163

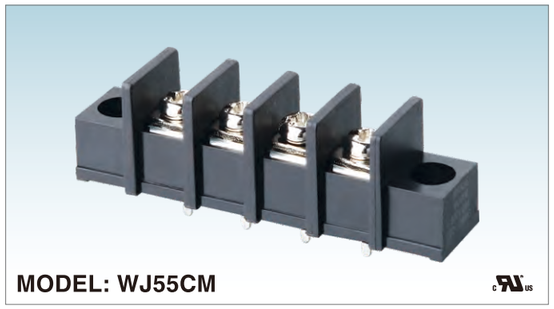

MODEL: WJ55CM

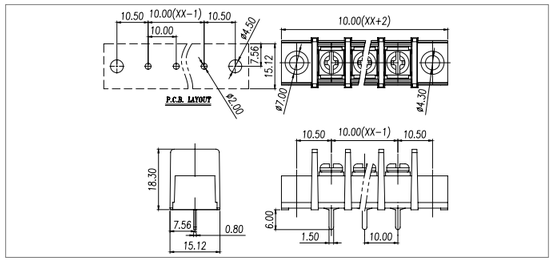

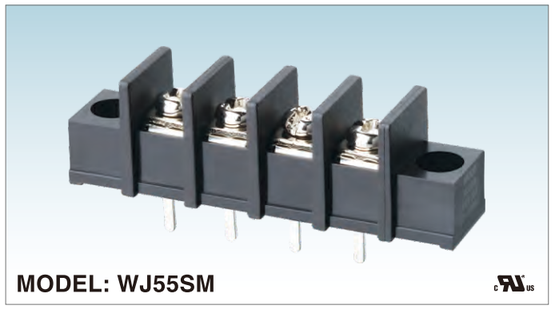

MODEL: WJ55SM

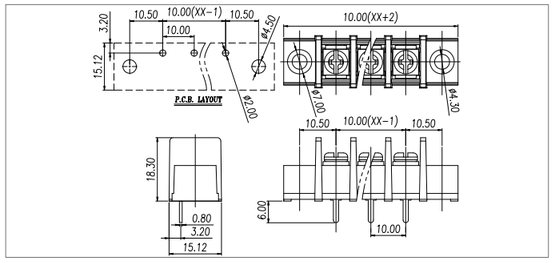

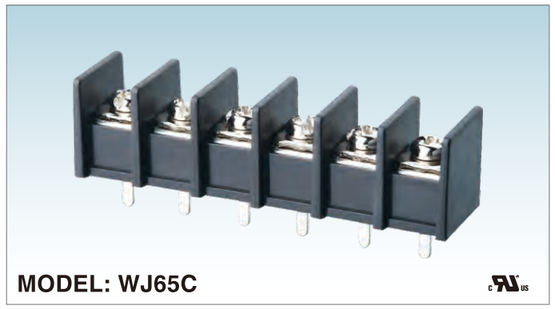

MODEL: WJ65C

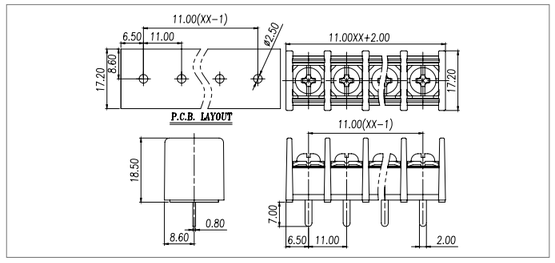

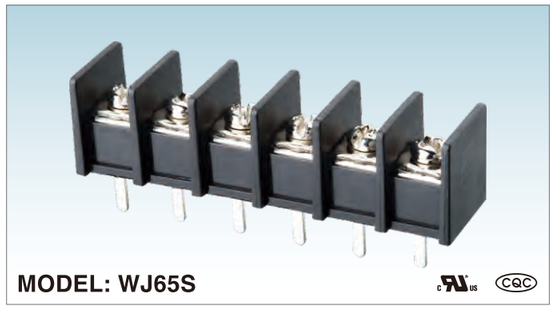

MODEL: WJ65S

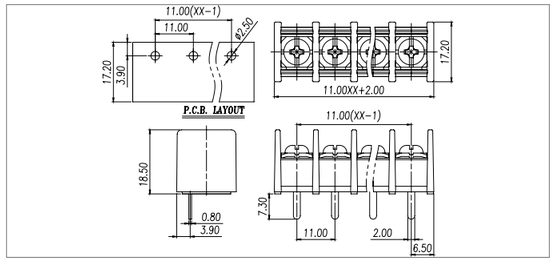

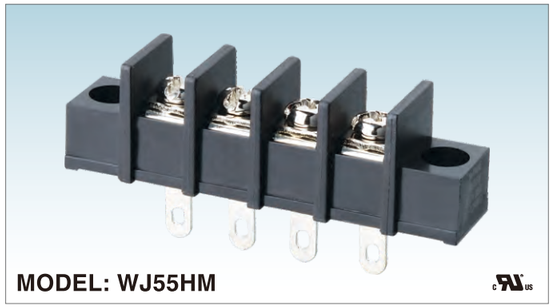

MODEL: WJ55HM

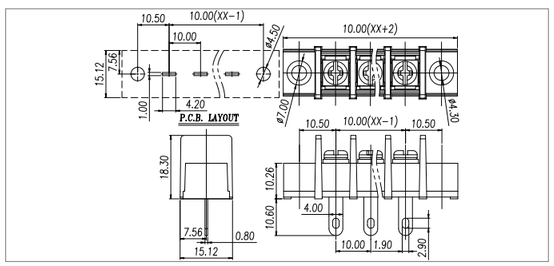

材质及电镀	
螺丝	M4.0, 钢, 镀镍
焊脚	铜合金, 镀锡
塑件	PA66, UL94V−0

电气性能		
参考标准	UL	IEC
额定电压	300V	400V
额定电流	20A	24A
使用线径	22−12AWG	2.5mm²
接触电阻	20mΩ	
绝缘电阻	500MΩ/DC500V	
耐电压	AC2000V/1Min	
温度范围	−40℃~+105℃	
扭矩	12.24kgf−cm/1.2Nm/10.6Lbin	

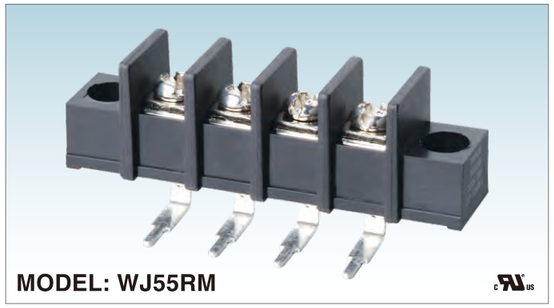

MODEL: WJ55RM

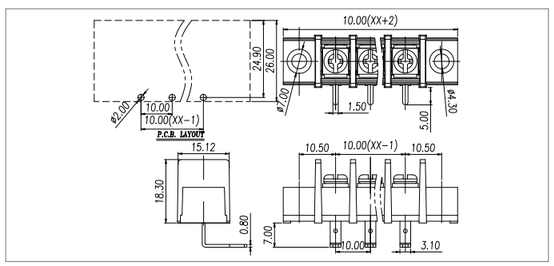

MATERIAL	
Screw	M4.0 Steel Ni plated
Pin Header	Copper alloy, Sn plated
Housing	PA66, UL94V−0

ELECTRICAL		
Standard	UL	IEC
Rated voltage	300V	400V
Rated current	20A	24A
Wire range	22−12AWG	2.5mm²
Contact resistance	20mΩ	
Insulation resistance	500MΩ/DC500V	
Withstanding voltage	AC2000V/1Min	
Temp. range	−40℃~+105℃	
Torque	12.24kgf−cm/1.2Nm/10.6Lbin	

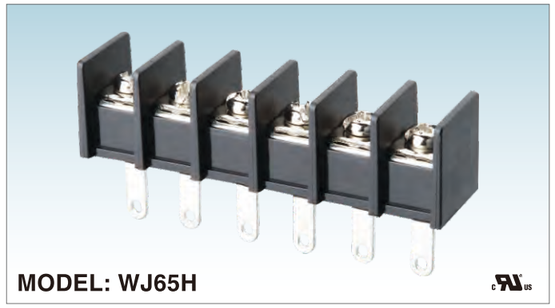

MODEL: WJ65H

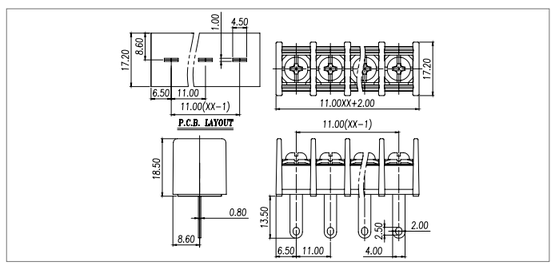

材质及电镀	
螺丝	M4.0, 钢, 镀镍
焊脚	铜合金, 镀锡
塑件	PA66, UL94V−0

电气性能		
参考标准	UL	IEC
额定电压	300V	500V
额定电流	20A	32A
使用线径	22−12AWG	4.0mm²
接触电阻	20mΩ	
绝缘电阻	500MΩ/DC500V	
耐电压	AC2000V/1Min	
温度范围	−40℃~+105℃	
扭矩	12.24kgf−cm/1.2Nm/10.6Lbin	

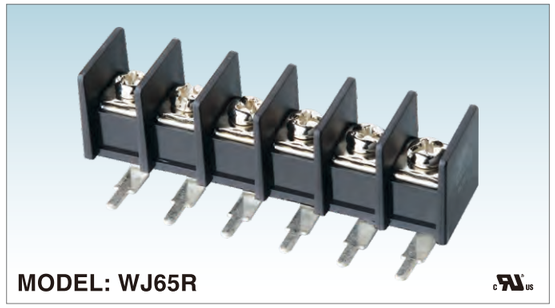

MODEL: WJ65R

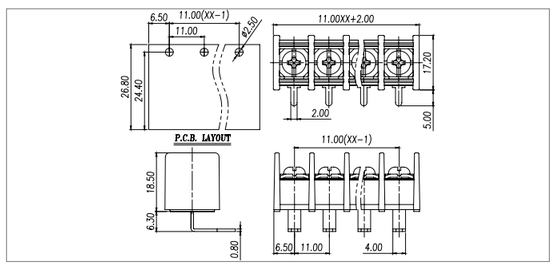

MATERIAL	
Screw	M4.0 Steel Ni plated
Pin Header	Copper alloy, Sn plated
Housing	PA66, UL94V−0

ELECTRICAL		
Standard	UL	IEC
Rated voltage	300V	500V
Rated current	20A	32A
Wire range	22−12AWG	4.0mm²
Contact resistance	20mΩ	
Insulation resistance	500MΩ/DC500V	
Withstanding voltage	AC2000V/1Min	
Temp. range	−40℃~+105℃	
Torque	12.24kgf−cm/1.2Nm/10.6Lbin	

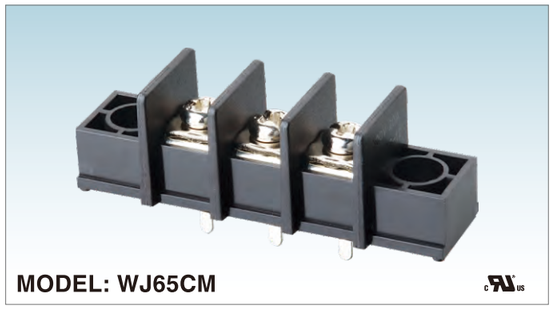

MODEL: WJ65CM

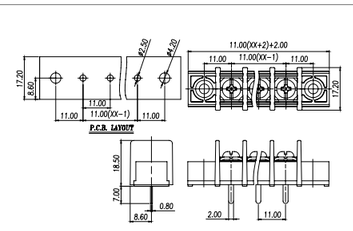

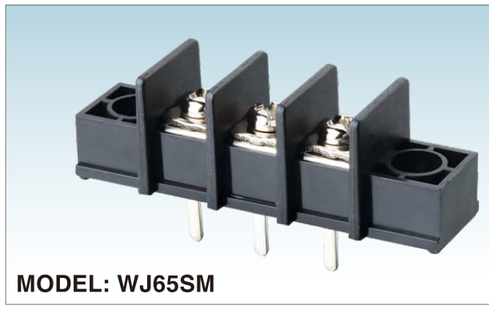

MODEL: WJ65SM

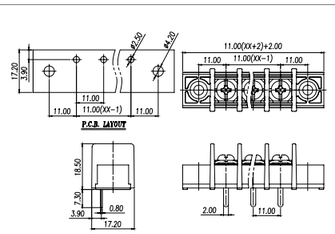

材质及电镀	
螺丝	M4.0, 钢, 镀镍
焊脚	铜合金, 镀锡
塑件	PA66, UL94V-0

电气性能		
参考标准	UL	IEC
额定电压	300V	500V
额定电流	20A	32A
使用线径	22-12AWG	4.0mm²
接触电阻	20mΩ	
绝缘电阻	500MΩ/DC500V	
耐电压	AC2000V/1Min	
温度范围	-40℃~+105℃	
扭矩	12.24kgf-cm/1.2Nm/10.6Lbin	

MATERIAL	
Screw	M4.0 Steel Ni plated
Pin Header	Copper alloy, Sn plated
Housing	PA66, UL94V-0

ELECTRICAL		
Standard	UL	IEC
Rated voltage	300V	500V
Rated current	20A	32A
Wire range	22-12AWG	4.0mm²
Contact resistance	20mΩ	
Insulation resistance	500MΩ/DC500V	
Withstanding voltage	AC2000V/1Min	
Temp. range	-40℃~+105℃	
Torque	12.24kgf-cm/1.2Nm/10.6Lbin	

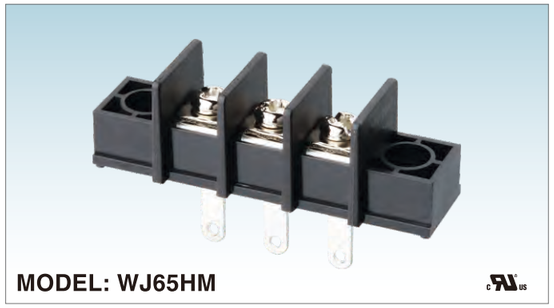

MODEL: WJ65HM

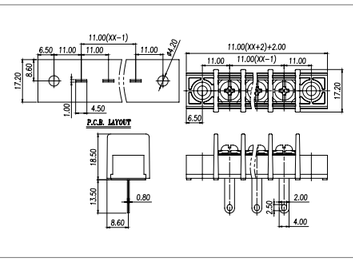

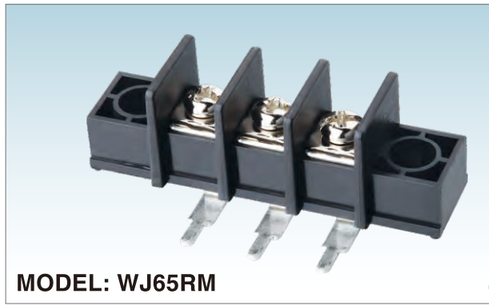

MODEL: WJ65RM

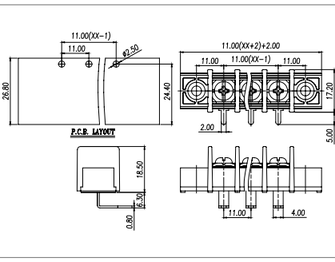

材质及电镀	
螺丝	M4.0, 钢, 镀镍
焊脚	铜合金, 镀锡
塑件	PA66, UL94V-0

电气性能		
参考标准	UL	IEC
额定电压	300V	500V
额定电流	20A	32A
使用线径	22-12AWG	4.0mm²
接触电阻	20mΩ	
绝缘电阻	500MΩ/DC500V	
耐电压	AC2000V/1Min	
温度范围	-40℃~+105℃	
扭矩	12.24kgf-cm/1.2Nm/10.6Lbin	

MATERIAL	
Screw	M4.0 Steel Ni plated
Pin Header	Copper alloy, Sn plated
Housing	PA66, UL94V-0

ELECTRICAL		
Standard	UL	IEC
Rated voltage	300V	500V
Rated current	20A	32A
Wire range	22-12AWG	4.0mm²
Contact resistance	20mΩ	
Insulation resistance	500MΩ/DC500V	
Withstanding voltage	AC2000V/1Min	
Temp. range	-40℃~+105℃	
Torque	12.24kgf-cm/1.2Nm/10.6Lbin	



MODEL: WJ28C

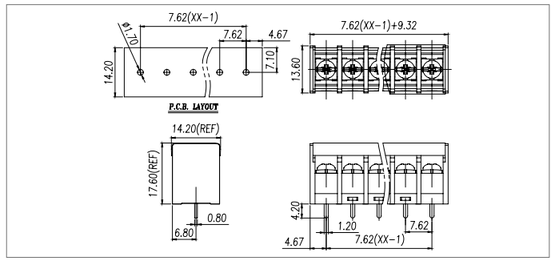



MODEL: WJ28S

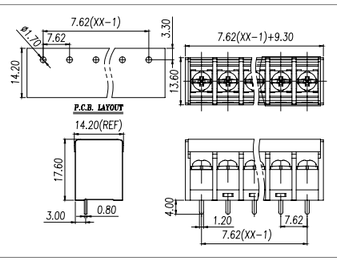

材质及电镀	
螺丝	M3.0, 钢, 镀镍
焊脚	铜合金, 镀锡
塑件	PA66, UL94V-0

电气性能		
参考标准	UL	IEC
额定电压	300V	400V
额定电流	15A	24A
使用线径	22-14AWG	2.5mm²
接触电阻	20mΩ	
绝缘电阻	500MΩ/DC500V	
耐电压	AC2000V/1Min	
温度范围	-40℃~+105℃	
扭矩	5.10kgf-cm/0.5Nm/4.50Lbin	

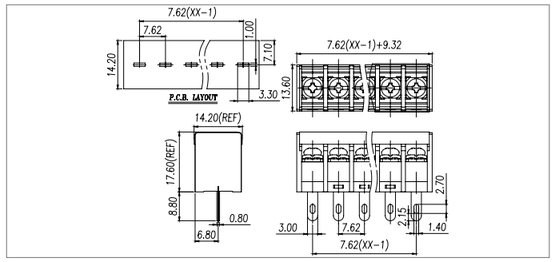

MODEL: WJ28H

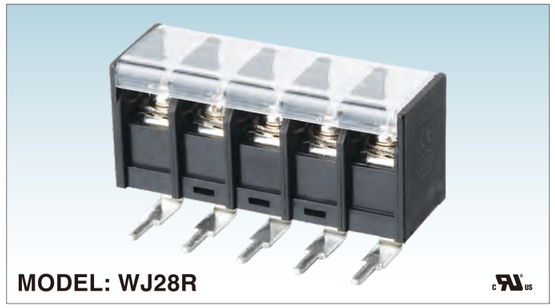

MODEL: WJ28R

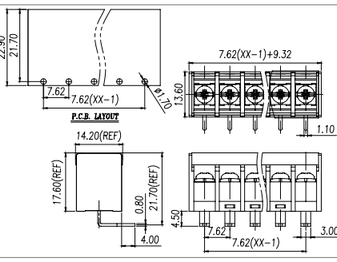

MATERIAL	
Screw	M3.0 Steel Ni plated
Pin Header	Copper alloy, Sn plated
Housing	PA66, UL94V-0

ELECTRICAL		
Standard	UL	IEC
Rated voltage	300V	400V
Rated current	15A	24A
Wire range	22-14AWG	2.5mm²
Contact resistance	20mΩ	
Insulation resistance	500MΩ/DC500V	
Withstanding voltage	AC2000V/1Min	
Temp. range	-40℃~+105℃	
Torque	5.10kgf-cm/0.5Nm/4.50Lbin	

ISO14001 ISO45001 ISO9001 ISO80079-34 ISO/TS 22163



MODEL: WJ28CM

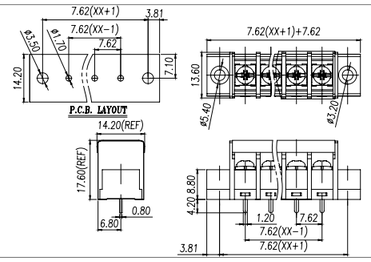

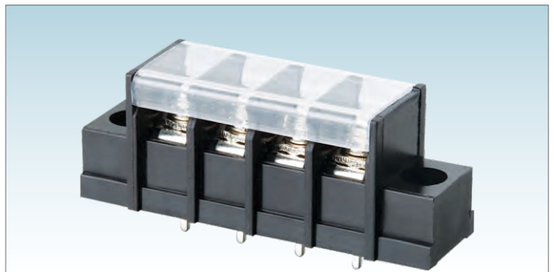

MODEL: WJ28SM

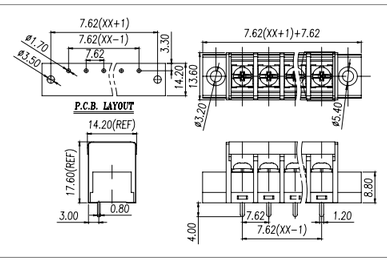



MODEL: WJ38C

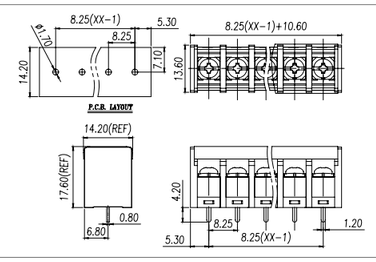

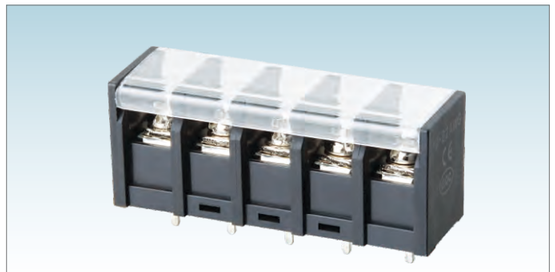

MODEL: WJ38S

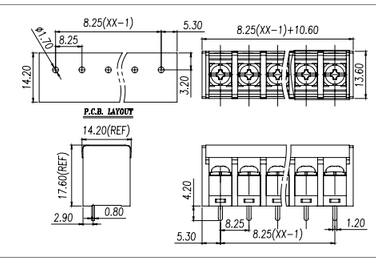

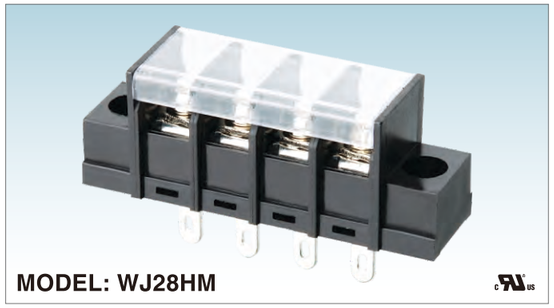

MODEL: WJ28HM

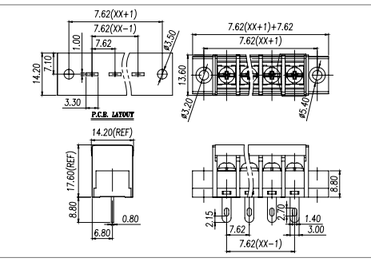

材质及电镀	
螺丝	M3.0, 钢, 镀镍
焊脚	铜合金, 镀锡
塑件	PA66, UL94V-0

电气性能		
参考标准	UL	IEC
额定电压	300V	400V
额定电流	15A	24A
使用线径	22-14AWG	2.5mm²
接触电阻	20mΩ	
绝缘电阻	500MΩ/DC500V	
耐电压	AC2000V/1Min	
温度范围	-40℃~+105℃	
扭矩	5.10kgf-cm/0.5Nm/4.50Lbin	

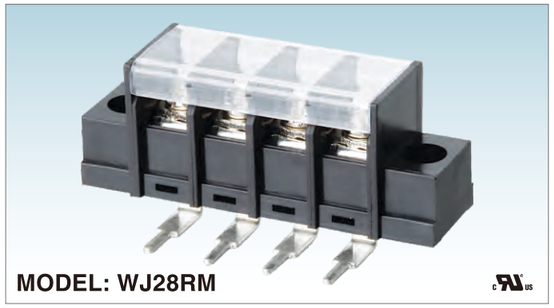

MODEL: WJ28RM

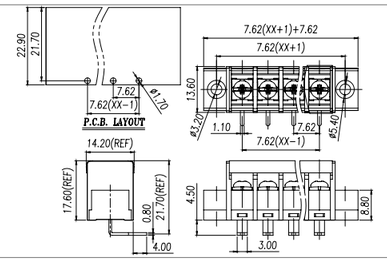

MATERIAL	
Screw	M3.0 Steel Ni plated
Pin Header	Copper alloy, Sn plated
Housing	PA66, UL94V-0

ELECTRICAL		
Standard	UL	IEC
Rated voltage	300V	400V
Rated current	15A	24A
Wire range	22-14AWG	2.5mm²
Contact resistance	20mΩ	
Insulation resistance	500MΩ/DC500V	
Withstanding voltage	AC2000V/1Min	
Temp. range	-40℃~+105℃	
Torque	5.10kgf-cm/0.5Nm/4.50Lbin	

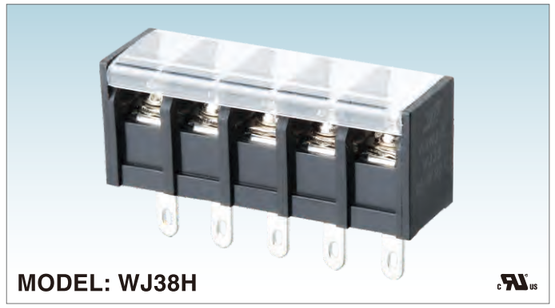

MODEL: WJ38H

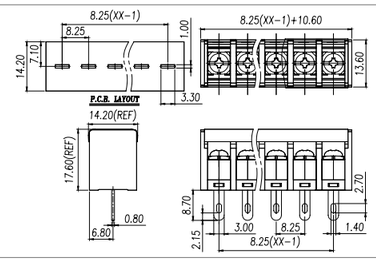

材质及电镀	
螺丝	M3.0, 钢, 镀镍
焊脚	铜合金, 镀锡
塑件	PA66, UL94V-0

电气性能		
参考标准	UL	IEC
额定电压	300V	320V
额定电流	20A	24A
使用线径	22-12AWG	2.5mm²
接触电阻	20mΩ	
绝缘电阻	500MΩ/DC500V	
耐电压	AC2000V/1Min	
温度范围	-40℃~+105℃	
扭矩	5.10kgf-cm/0.5Nm/4.50Lbin	



MODEL: WJ38R

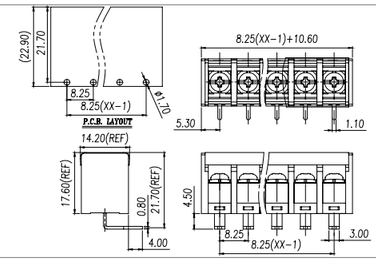

MATERIAL	
Screw	M3.0 Steel Ni plated
Pin Header	Copper alloy, Sn plated
Housing	PA66, UL94V-0

ELECTRICAL		
Standard	UL	IEC
Rated voltage	300V	320V
Rated current	20A	24A
Wire range	22-12AWG	2.5mm²
Contact resistance	20mΩ	
Insulation resistance	500MΩ/DC500V	
Withstanding voltage	AC2000V/1Min	
Temp. range	-40℃~+105℃	
Torque	5.10kgf-cm/0.5Nm/4.50Lbin	

ISO14001 ISO45001 ISO9001 ISO80079-34 ISO/TS 22163

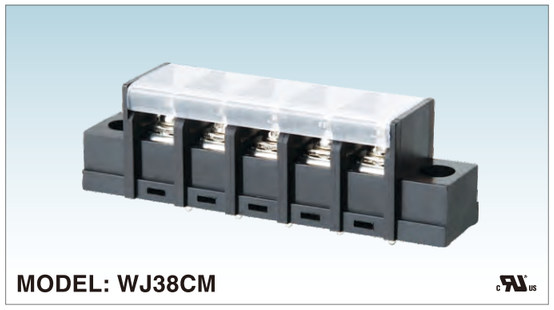

MODEL: WJ38CM

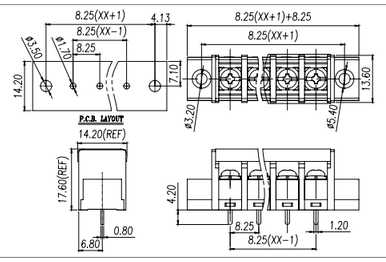

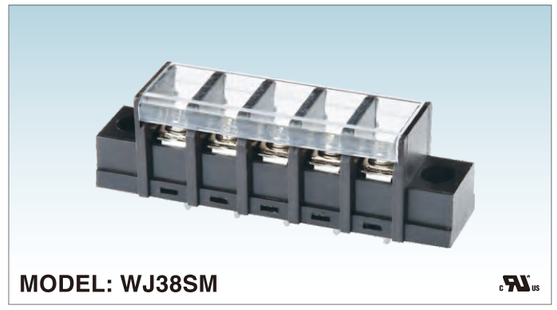

MODEL: WJ38SM

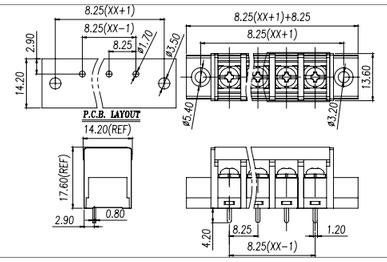



MODEL: WJ48C

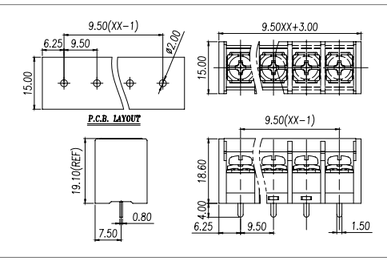

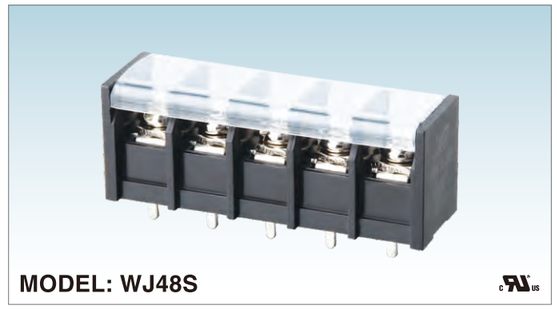

MODEL: WJ48S

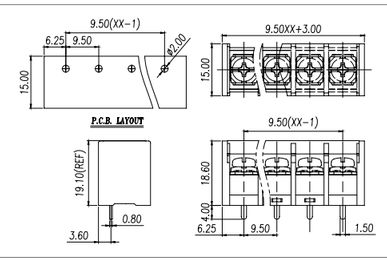

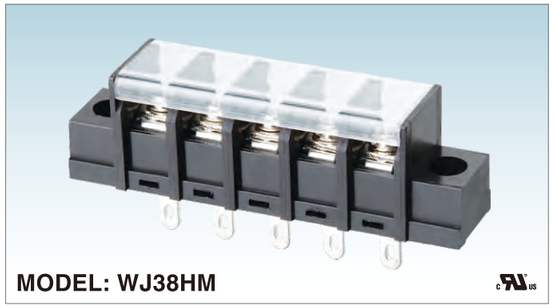

MODEL: WJ38HM

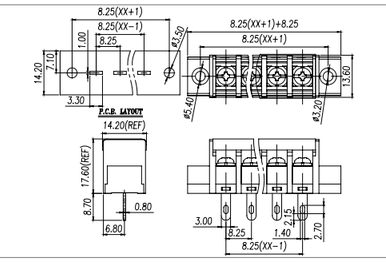

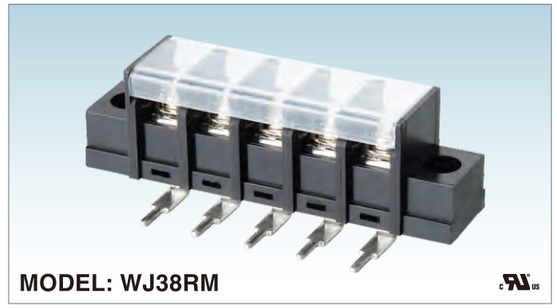

MODEL: WJ38RM

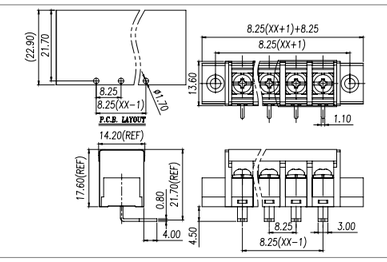

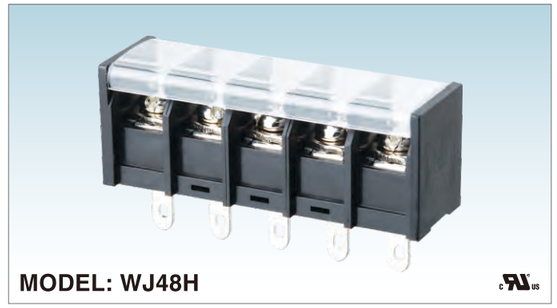

MODEL: WJ48H

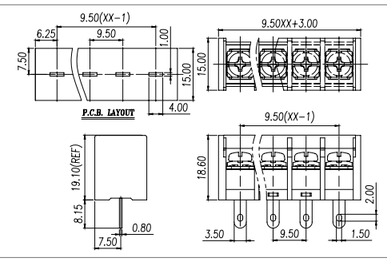

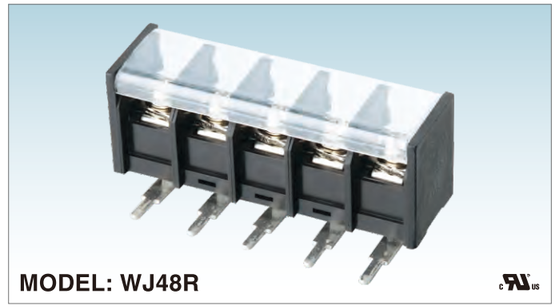

MODEL: WJ48R

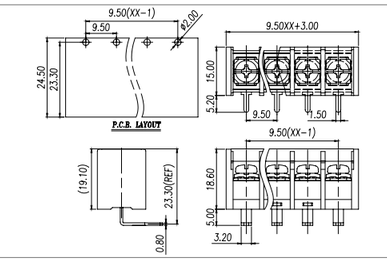

材质及电镀	
螺丝	M3.0, 钢, 镀镍
焊脚	铜合金, 镀锡
塑件	PA66, UL94V-0

电气性能		
参考标准	UL	IEC
额定电压	300V	320V
额定电流	20A	24A
使用线径	22-12AWG	2.5mm²
接触电阻	20mΩ	
绝缘电阻	500MΩ/DC500V	
耐电压	AC2000V/1Min	
温度范围	-40℃~+105℃	
扭矩	5.10kgf-cm/0.5Nm/4.50Lbin	

MATERIAL	
Screw	M3.0 Steel Ni plated
Pin Header	Copper alloy, Sn plated
Housing	PA66, UL94V-0

ELECTRICAL		
Standard	UL	IEC
Rated voltage	300V	320V
Rated current	20A	24A
Wire range	22-12AWG	2.5mm²
Contact resistance	20mΩ	
Insulation resistance	500MΩ/DC500V	
Withstanding voltage	AC2000V/1Min	
Temp. range	-40℃~+105℃	
Torque	5.10kgf-cm/0.5Nm/4.50Lbin	

材质及电镀	
螺丝	M4.0, 钢, 镀镍
焊脚	铜合金, 镀锡
塑件	PA66, UL94V-0

电气性能		
参考标准	UL	IEC
额定电压	300V	400V
额定电流	20A	24A
使用线径	22-12AWG	2.5mm²
接触电阻	20mΩ	
绝缘电阻	500MΩ/DC500V	
耐电压	AC2000V/1Min	
温度范围	-40℃~+105℃	
扭矩	12.24kgf-cm/1.2Nm/10.6Lbin	

MATERIAL	
Screw	M4.0 Steel Ni plated
Pin Header	Copper alloy, Sn plated
Housing	PA66, UL94V-0

ELECTRICAL		
Standard	UL	IEC
Rated voltage	300V	400V
Rated current	20A	24A
Wire range	22-12AWG	2.5mm²
Contact resistance	20mΩ	
Insulation resistance	500MΩ/DC500V	
Withstanding voltage	AC2000V/1Min	
Temp. range	-40℃~+105℃	
Torque	12.24kgf-cm/1.2Nm/10.6Lbin	

ISO14001 ISO45001 ISO9001 ISO80079-34 ISO/TS 22163



MODEL: WJ48CM

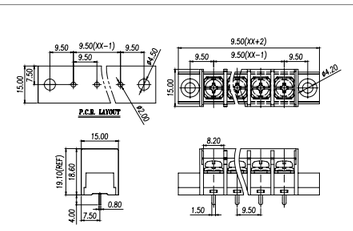



MODEL: WJ48SM

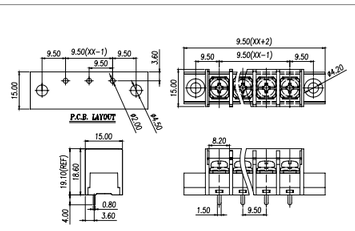



MODEL: WJ58C

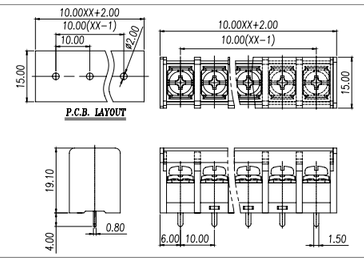

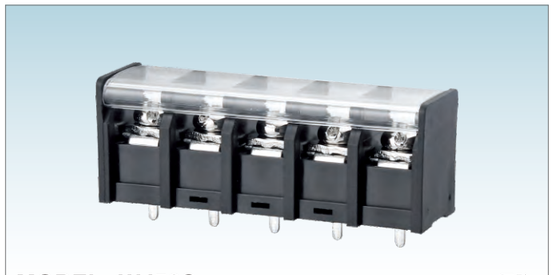

MODEL: WJ58S

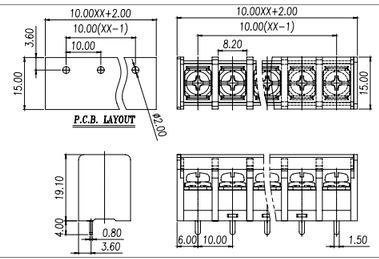

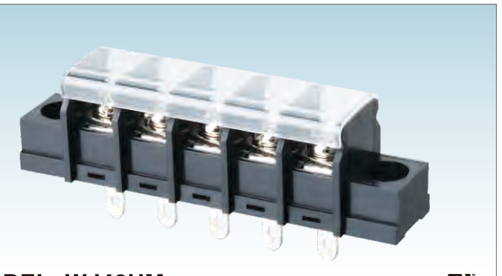

MODEL: WJ48HM

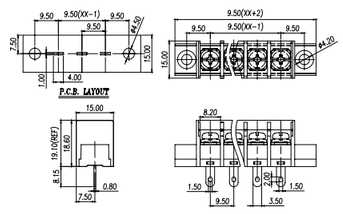

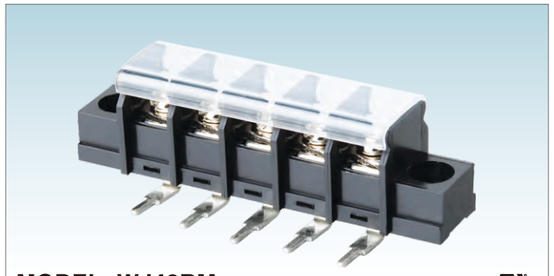

MODEL: WJ48RM

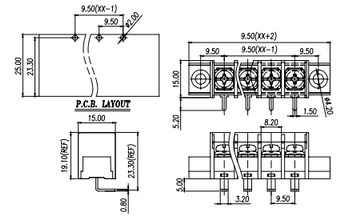

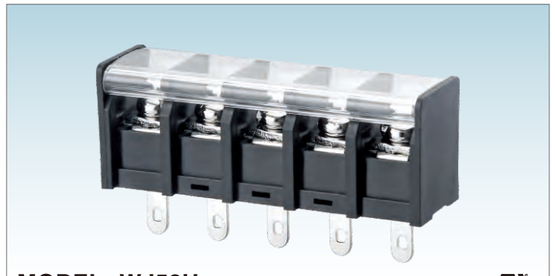

MODEL: WJ58H

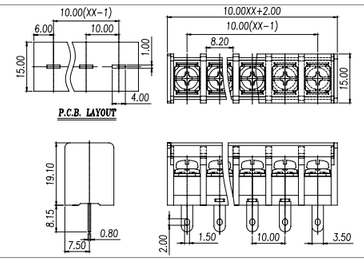

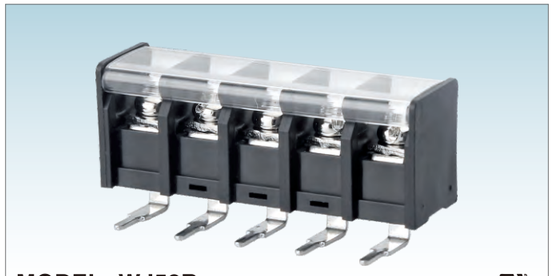

MODEL: WJ58R

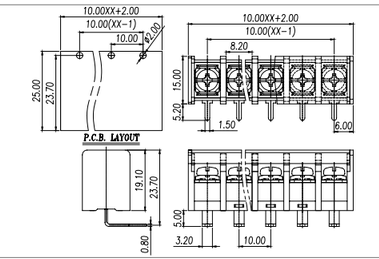

材质及电镀	
螺丝	M4.0, 钢, 镀镍
焊脚	铜合金, 镀锡
塑件	PA66, UL94V−0

电气性能		
参考标准	UL	IEC
额定电压	300V	400V
额定电流	20A	24A
使用线径	22−12AWG	2.5mm²
接触电阻	20mΩ	
绝缘电阻	500MΩ/DC500V	
耐电压	AC2000V/1Min	
温度范围	−40℃~+105℃	
扭矩	12.24kgf−cm/1.2Nm/10.6Lbin	

MATERIAL	
Screw	M4.0 Steel Ni plated
Pin Header	Copper alloy, Sn plated
Housing	PA66, UL94V−0

ELECTRICAL		
Standard	UL	IEC
Rated voltage	300V	400V
Rated current	20A	24A
Wire range	22−12AWG	2.5mm²
Contact resistance	20mΩ	
Insulation resistance	500MΩ/DC500V	
Withstanding voltage	AC2000V/1Min	
Temp. range	−40℃~+105℃	
Torque	12.24kgf−cm/1.2Nm/10.6Lbin	

材质及电镀	
螺丝	M4.0, 钢, 镀镍
焊脚	铜合金, 镀锡
塑件	PA66, UL94V−0

电气性能		
参考标准	UL	IEC
额定电压	300V	400V
额定电流	20A	24A
使用线径	22−12AWG	2.5mm²
接触电阻	20mΩ	
绝缘电阻	500MΩ/DC500V	
耐电压	AC2000V/1Min	
温度范围	−40℃~+105℃	
扭矩	12.24kgf−cm/1.2Nm/10.6Lbin	

MATERIAL	
Screw	M4.0 Steel Ni plated
Pin Header	Copper alloy, Sn plated
Housing	PA66, UL94V−0

ELECTRICAL		
Standard	UL	IEC
Rated voltage	300V	400V
Rated current	20A	24A
Wire range	22−12AWG	2.5mm²
Contact resistance	20mΩ	
Insulation resistance	500MΩ/DC500V	
Withstanding voltage	AC2000V/1Min	
Temp. range	−40℃~+105℃	
Torque	12.24kgf−cm/1.2Nm/10.6Lbin	

ISO14001 ISO45001 ISO9001 ISO80079-34 ISO/TS 22163



MODEL: WJ58CM

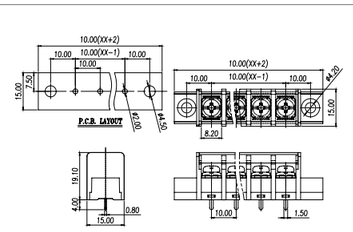

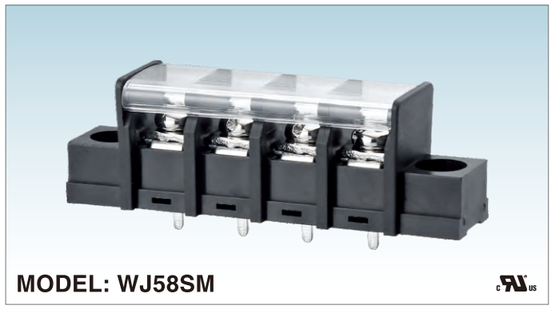

MODEL: WJ58SM

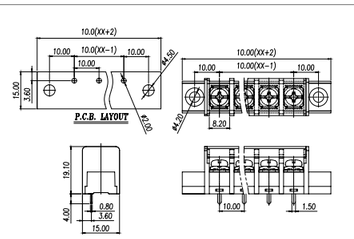



MODEL: WJ68C

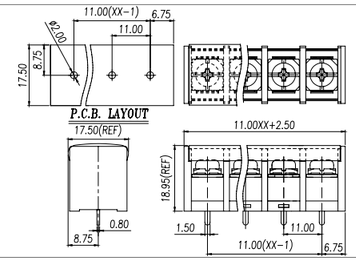



MODEL: WJ68S

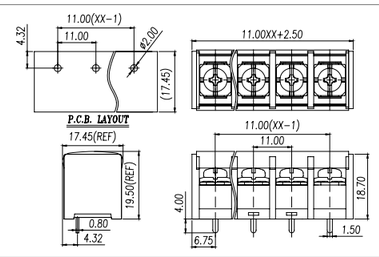

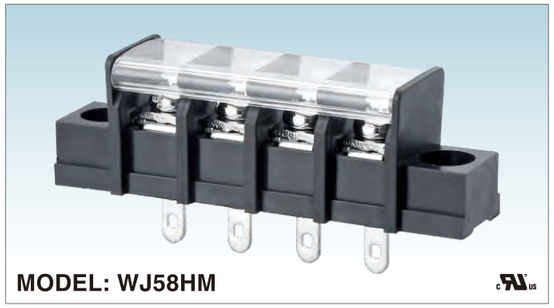

MODEL: WJ58HM

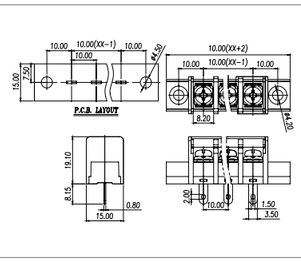

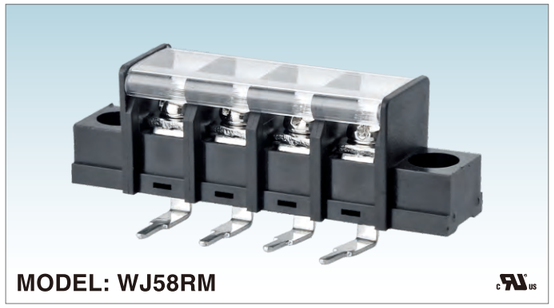

MODEL: WJ58RM

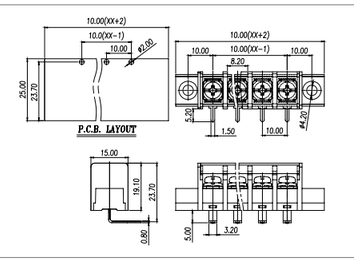

材质及电镀	
螺丝	M4.0, 钢, 镀镍
焊脚	铜合金, 镀锡
塑件	PA66, UL94V-0

电气性能		
参考标准	UL	IEC
额定电压	300V	400V
额定电流	20A	24A
使用线径	22-12AWG	2.5mm²
接触电阻	20mΩ	
绝缘电阻	500MΩ/DC500V	
耐电压	AC2000V/1Min	
温度范围	-40℃~+105℃	
扭矩	12.24kgf-cm/1.2Nm/10.6Lbin	

MATERIAL	
Screw	M4.0 Steel Ni plated
Pin Header	Copper alloy, Sn plated
Housing	PA66, UL94V-0

ELECTRICAL		
Standard	UL	IEC
Rated voltage	300V	400V
Rated current	20A	24A
Wire range	22-12AWG	2.5mm²
Contact resistance	20mΩ	
Insulation resistance	500MΩ/DC500V	
Withstanding voltage	AC2000V/1Min	
Temp. range	-40℃~+105℃	
Torque	12.24kgf-cm/1.2Nm/10.6Lbin	

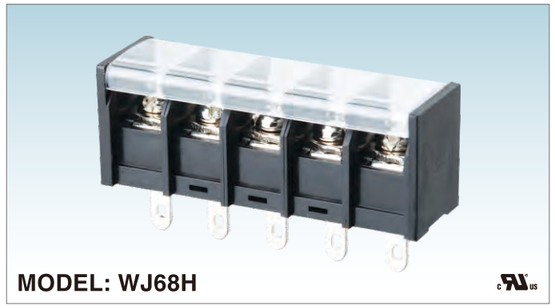

MODEL: WJ68H

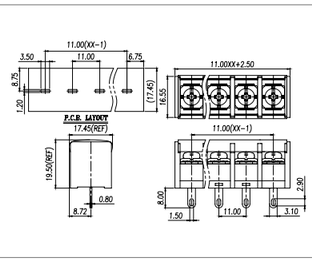

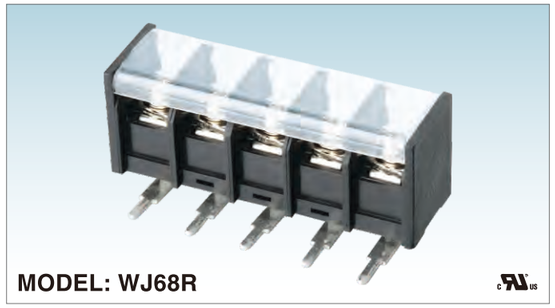

MODEL: WJ68R

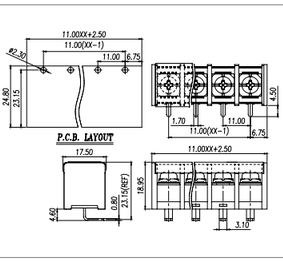

材质及电镀	
螺丝	M4.0, 钢, 镀镍
焊脚	铜合金, 镀锡
塑件	PA66, UL94V-0

电气性能		
参考标准	UL	IEC
额定电压	300V	500V
额定电流	20A	24A
使用线径	22-12AWG	2.5mm²
接触电阻	20mΩ	
绝缘电阻	500MΩ/DC500V	
耐电压	AC2000V/1Min	
温度范围	-40℃~+105℃	
扭矩	12.24kgf-cm/1.2Nm/10.6Lbin	

MATERIAL	
Screw	M4.0 Steel Ni plated
Pin Header	Copper alloy, Sn plated
Housing	PA66, UL94V-0

ELECTRICAL		
Standard	UL	IEC
Rated voltage	300V	500V
Rated current	20A	24A
Wire range	22-12AWG	2.5mm²
Contact resistance	20mΩ	
Insulation resistance	500MΩ/DC500V	
Withstanding voltage	AC2000V/1Min	
Temp. range	-40℃~+105℃	
Torque	12.24kgf-cm/1.2Nm/10.6Lbin	

ISO14001 ISO45001 ISO9001 ISO80079-34 ISO/TS 22163



MODEL: WJ68CM

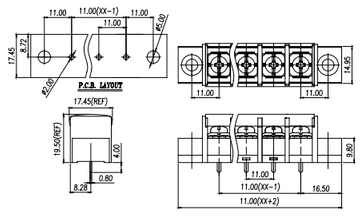



MODEL: WJ68SM

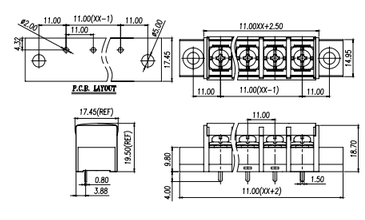

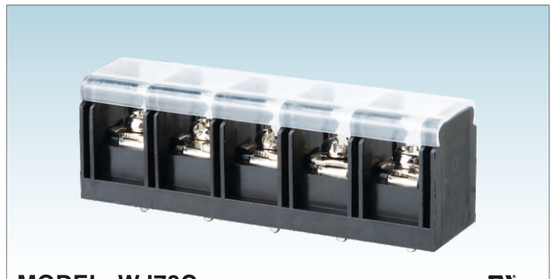

MODEL: WJ78C

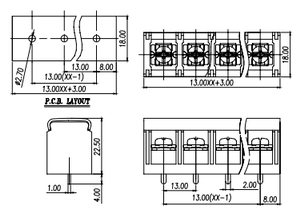

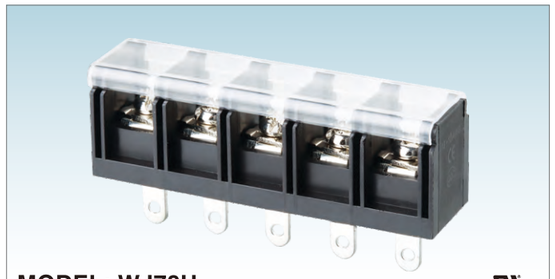

MODEL: WJ78H

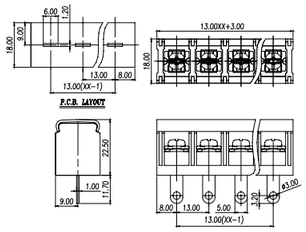

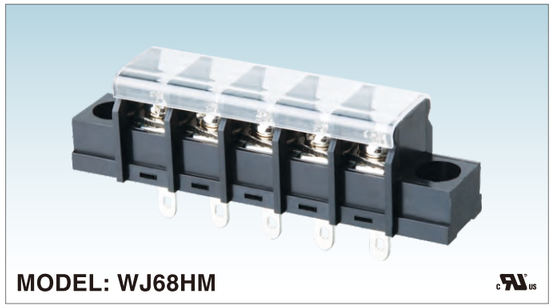

MODEL: WJ68HM

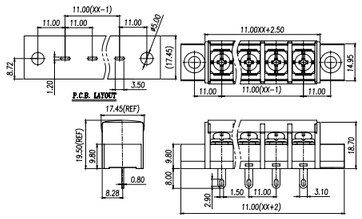

材质及电镀	
螺丝	M4.0, 钢, 镀镍
焊脚	铜合金, 镀锡
塑件	PA66, UL94V−0

电气性能		
参考标准	UL	IEC
额定电压	300V	500V
额定电流	20A	24A
使用线径	22−12AWG	2.5mm²
接触电阻	20mΩ	
绝缘电阻	500MΩ/DC500V	
耐电压	AC2000V/1Min	
温度范围	−40℃~+105℃	
扭矩	12.24kgf−cm/1.2Nm/10.6Lbin	

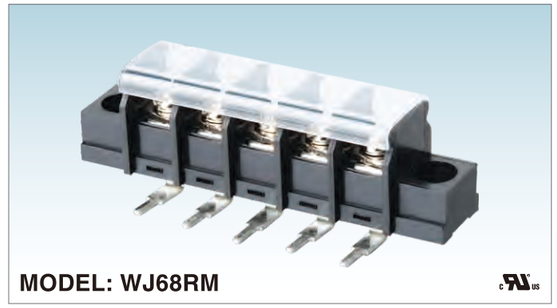

MODEL: WJ68RM

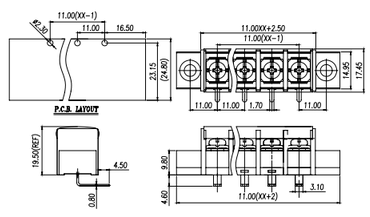

MATERIAL	
Screw	M4.0 Steel Ni plated
Pin Header	Copper alloy, Sn plated
Housing	PA66, UL94V−0

ELECTRICAL		
Standard	UL	IEC
Rated voltage	300V	500V
Rated current	20A	24A
Wire range	22−12AWG	2.5mm²
Contact resistance	20mΩ	
Insulation resistance	500MΩ/DC500V	
Withstanding voltage	AC2000V/1Min	
Temp. range	−40℃~+105℃	
Torque	12.24kgf−cm/1.2Nm/10.6Lbin	

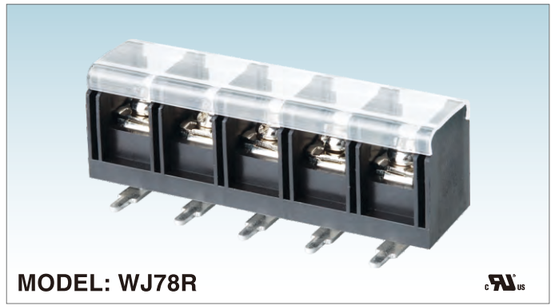

MODEL: WJ78R

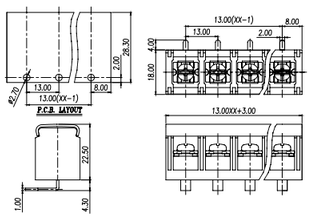

材质及电镀	
螺丝	M4.0, 钢, 镀镍
焊脚	铜合金, 镀锡
塑件	PA66, UL94V−0

电气性能		
参考标准	UL	IEC
额定电压	600V	630V
额定电流	40A	41A
使用线径	18−10AWG	6.0mm²
接触电阻	20mΩ	
绝缘电阻	500MΩ/DC500V	
耐电压	AC2000V/1Min	
温度范围	−40℃~+105℃	
扭矩	12.24kgf−cm/1.2Nm/10.6Lbin	

MATERIAL	
Screw	M4.0 Steel Ni plated
Pin Header	Copper alloy, Sn plated
Housing	PA66, UL94V−0

ELECTRICAL		
Standard	UL	IEC
Rated voltage	600V	630V
Rated current	40A	41A
Wire range	18−10AWG	6.0mm²
Contact resistance	20mΩ	
Insulation resistance	500MΩ/DC500V	
Withstanding voltage	AC2000V/1Min	
Temp. range	−40℃~+105℃	
Torque	12.24kgf−cm/1.2Nm/10.6Lbin	



MODEL: WJ78CM

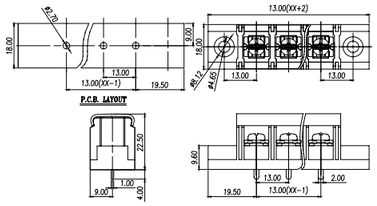

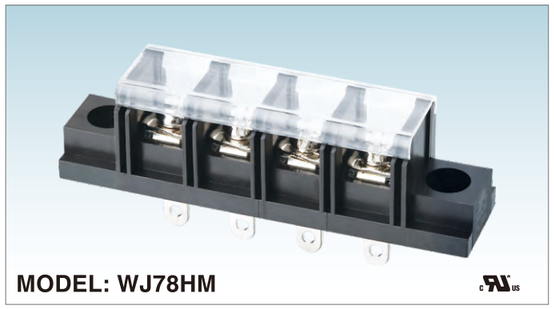

MODEL: WJ78HM

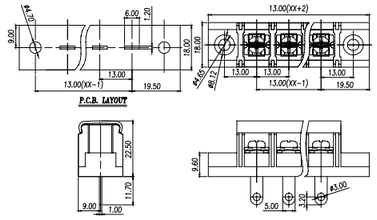

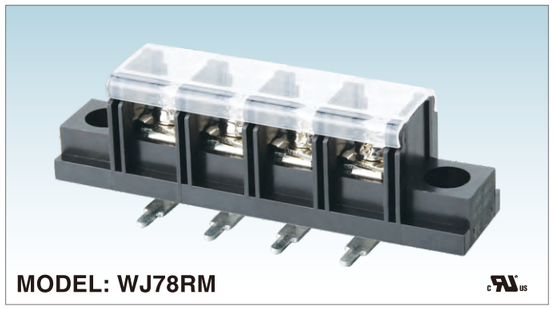

MODEL: WJ78RM

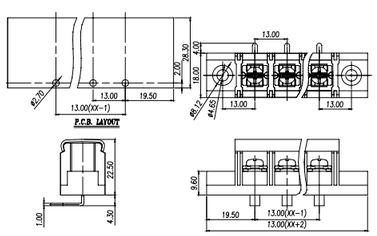

材质及电镀	
螺丝	M4.0, 钢, 镀镍
焊脚	铜合金, 镀锡
塑件	PA66, UL94V-0

电气性能		
参考标准	UL	IEC
额定电压	600V	630V
额定电流	40A	41A
使用线径	18-10AWG	6.0mm²
接触电阻	20mΩ	
绝缘电阻	500MΩ/DC500V	
耐电压	AC2000V/1Min	
温度范围	-40℃~+105℃	
扭矩	12.24kgf-cm/1.2Nm/10.6Lbin	

MATERIAL	
Screw	M4.0 Steel Ni plated
Pin Header	Copper alloy, Sn plated
Housing	PA66, UL94V-0

ELECTRICAL		
Standard	UL	IEC
Rated voltage	600V	630V
Rated current	40A	41A
Wire range	18-10AWG	6.0mm²
Contact resistance	20mΩ	
Insulation resistance	500MΩ/DC500V	
Withstanding voltage	AC2000V/1Min	
Temp. range	-40℃~+105℃	
Torque	12.24kgf-cm/1.2Nm/10.6Lbin	

ISO14001 ISO45001 ISO9001 ISO80079-34 ISO/TS 22163



Pitch:7.62mm

MODEL: WJ06

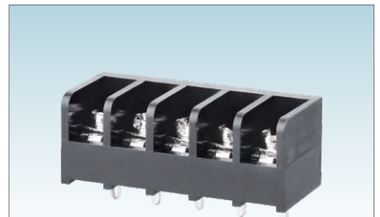

Pitch:6.35mm

MODEL: WJ16



Pitch:6.35mm

MODEL: WJ16A

认证/CERTIFICATION	
材质及电镀	
螺丝	M3,钢，镀镍
焊脚	铜合金,镀锡
塑件	PA66，UL94V-0
电气性能	
参考标准	UL IEC
额定电压	300V 250V
额定电流	15A 24A
使用线径	22-14AWG 2.5mm²
接触电阻	20mΩ
绝缘电阻	500MΩ/DC500V
耐电压	AC2000V/1Min
机械性能	
温度范围	-40℃~+105℃
扭矩	5.1kgf-cm/0.5Nm/4.43Lbin

MATERIAL	
Screw	M3, Steel ,Ni plated
Pin Herder	Copper alloy, Sn Plated
Housing	PA66,UL94V-0
ELECTRICAL	
Standard	UL IEC
Rated voltage	300V 250V
Rated current	15A 24A
Wire range	22-14AWG 2.5mm²
Contact resistance	20mΩ
Insulation resistance	500MΩ/DC500V
Withstanding voltage	AC2000V/1Min
MECHANICAL	
Temp. range	-40℃~+105℃
Torque	5.1kgf-cm/0.5Nm/4.43Lbin

认证/CERTIFICATION	
材质及电镀	
螺丝	M3,钢，镀镍
焊脚	铜合金,镀锡
塑件	PA66，UL94V-0
电气性能	
参考标准	UL IEC
额定电压	300V 250V
额定电流	10A 17.5A
使用线径	22-16AWG 1.5mm²
接触电阻	20mΩ
绝缘电阻	500MΩ/DC500V
耐电压	AC2000V/1Min
机械性能	
温度范围	-40℃~+105℃
扭矩	5.1kgf-cm/0.5Nm/4.43Lbin

MATERIAL	
Screw	M3, Steel,Ni plated
Pin Herder	Copper alloy, Sn Plated
Housing	PA66,UL94V-0
ELECTRICAL	
Standard	UL IEC
Rated voltage	300V 250V
Rated current	10A 17.5A
Wire range	22-16AWG 1.5mm²
Contact resistance	20mΩ
Insulation resistance	500MΩ/DC500V
Withstanding voltage	AC2000V/1Min
MECHANICAL	
Temp. range	-40℃~+105℃
Torque	5.1kgf-cm/0.5Nm/4.43Lbin

认证/CERTIFICATION	
材质及电镀	
螺丝	M3,钢，镀镍
焊脚	铜合金,镀锡
塑件	PA66，UL94V-0
电气性能	
参考标准	UL IEC
额定电压	300V 250V
额定电流	10A 17.5A
使用线径	22-16AWG 1.5mm²
接触电阻	20mΩ
绝缘电阻	500MΩ/DC500V
耐电压	AC2000V/1Min
机械性能	
温度范围	-40℃~+105℃
扭矩	5.1kgf-cm/0.5Nm/4.43Lbin

MATERIAL	
Screw	M3.0 Steel Ni plated
Pin Herder	Copper alloy, Sn Plated
Housing	PA66, UL94V-0
ELECTRICAL	
Standard	UL IEC
Rated voltage	300V 250V
Rated current	10A 17.5A
Wire range	22-16AWG 1.5mm²
Contact resistance	20mΩ
Insulation resistance	500MΩ/DC500V
Withstanding voltage	AC2000V/1Min
MECHANICAL	
Temp. range	-40℃~+105℃
Torque	5.1kgf-cm/0.5Nm/4.43Lbin

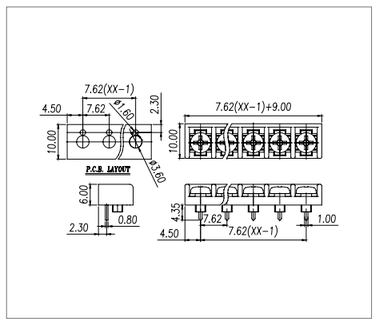

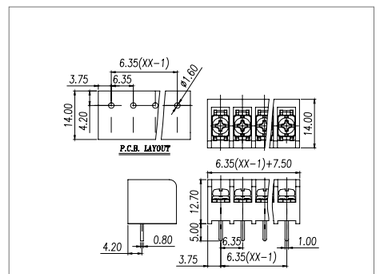

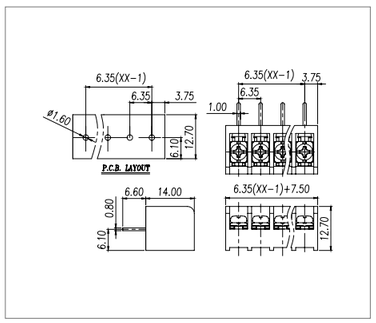

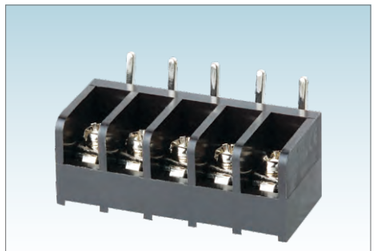

Pitch:6.35mm

MODEL: WJ16R



Pitch:8.5mm

MODEL: WJ26

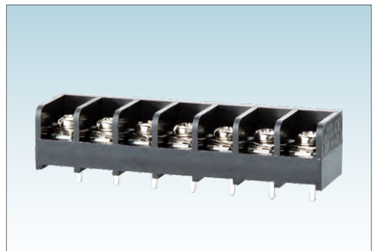

Pitch:8.25mm

MODEL: WJ36



Pitch:8.25mm

MODEL:WJ36SG

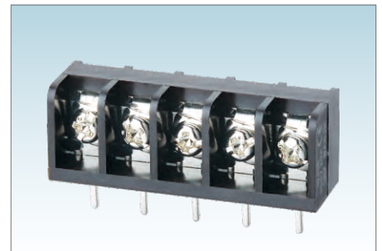

Pitch:8.25mm

MODEL: WJ36A



Pitch:8.25mm

MODEL: WJ36G

认证/CERTIFICATION	
材质及电镀	
螺丝	M3,钢，镀镍
焊脚	铜合金,镀锡
塑件	PA66，UL94V-0
电气性能	
参考标准	UL / IEC
额定电压	300V / 250V
额定电流	10A / 17.5A
使用线径	22-16AWG / 1.5mm²
接触电阻	20mΩ
绝缘电阻	500MΩ/DC500V
耐电压	AC2000V/1Min
机械性能	
温度范围	-40℃~+105℃
扭矩	5.1kgf-cm/0.5Nm/4.43Lbin

MATERIAL	
Screw	M3.0 Steel Ni plated
Pin Herder	Copper alloy, Sn Plated
Housing	PA66, UL94V-0
ELECTRICAL	
Standard	UL / IEC
Rated voltage	300V / 250V
Rated current	10A / 17.5A
Wire range	22-16AWG / 1.5mm²
Contact resistance	20mΩ
Insulation resistance	500MΩ/DC500V
Withstanding voltage	AC2000V/1Min
MECHANICAL	
Temp. range	-40℃~+105℃
Torque	5.1kgf-cm/0.5Nm/4.43Lbin

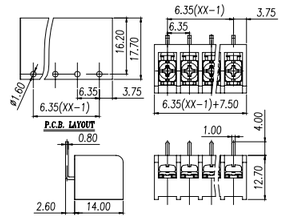

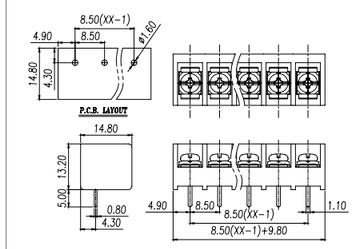

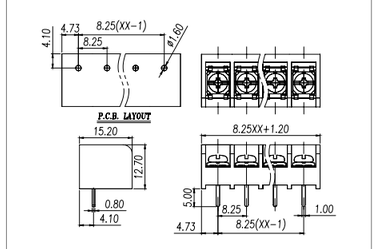

认证/CERTIFICATION	
材质及电镀	
螺丝	M3,钢，镀镍
焊脚	铜合金,镀锡
塑件	PA66，UL94V-0
电气性能	
参考标准	UL / IEC
额定电压	300V / 400V
额定电流	20A / 24A
使用线径	22-12AWG / 2.5mm²
接触电阻	20mΩ
绝缘电阻	500MΩ/DC500V
耐电压	AC2000V/1Min
机械性能	
温度范围	-40℃~+105℃
扭矩	5.1kgf-cm/0.5Nm/4.43Lbin

MATERIAL	
Screw	M3.0 Steel Ni plated
Pin Herder	Copper alloy, Sn Plated
Housing	PA66, UL94V-0
ELECTRICAL	
Standard	UL / IEC
Rated voltage	300V / 400V
Rated current	20A / 24A
Wire range	22-12AWG / 2.5mm²
Contact resistance	20mΩ
Insulation resistance	500MΩ/DC500V
Withstanding voltage	AC2000V/1Min
MECHANICAL	
Temp. range	-40℃~+105℃
Torque	5.1kgf-cm/0.5Nm/4.43Lbin

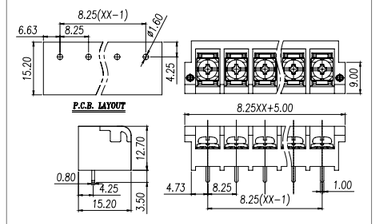

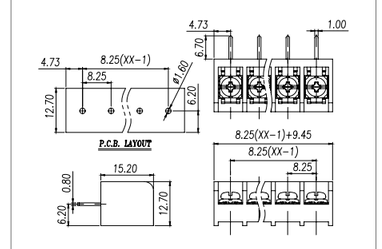

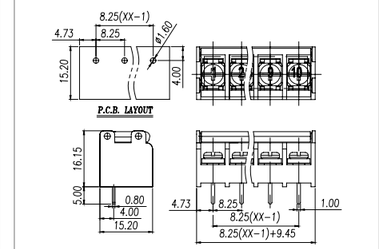

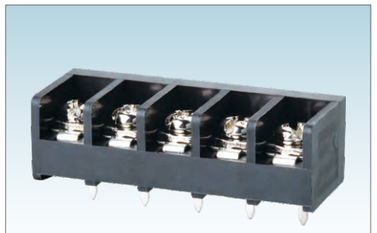

Pitch:9.5mm

MODEL: WJ46



Pitch:9.5mm

MODEL:WJ46SG



Pitch:9.5mm

MODEL: WJ46A

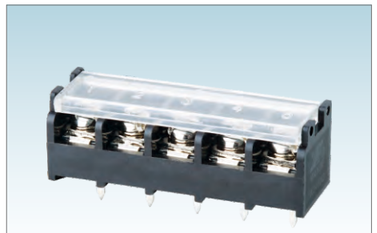

Pitch:9.5mm

MODEL: WJ46G

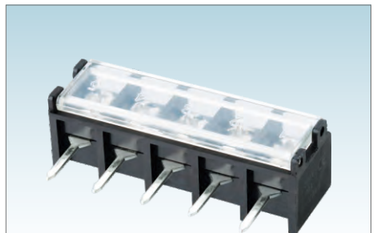

Pitch:9.5mm

MODEL: WJ46GA

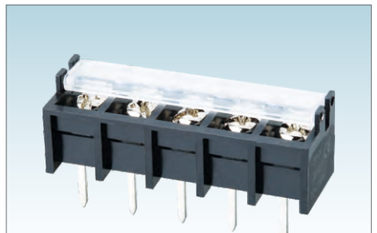

Pitch:9.5mm

MODEL: WJ46GX

认证/CERTIFICATION	
材质及电镀	
螺丝	M4.0, 钢 镀镍
焊脚	铜合金, 镀锡
塑件	PA66, UL94V-0
电气性能	
参考标准	UL / IEC
额定电压	300V / 400V
额定电流	20A / 24A
使用线径	22-12AWG / 2.5mm²
接触电阻	20mΩ
绝缘电阻	500MΩ/DC500V
耐电压	AC2000V/1Min
机械性能	
温度范围	-40℃~+105℃
扭矩	12.24kgf-cm/1.2Nm/10.6Lbin

MATERIAL	
Screw	M4.0 Steel Ni plated
Pin Herder	Copper alloy, Sn Plated
Housing	PA66, UL94V-0
ELECTRICAL	
Standard	UL / IEC
Rated voltage	300V / 400V
Rated current	20A / 24A
Wire range	22-12AWG / 2.5mm²
Contact resistance	20mΩ
Insulation resistance	500MΩ/DC500V
Withstanding voltage	AC2000V/1Min
MECHANICAL	
Temp. range	-40℃~+105℃
Torque	12.24kgf-cm/1.2Nm/10.6Lbin

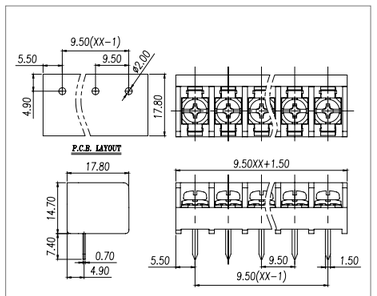

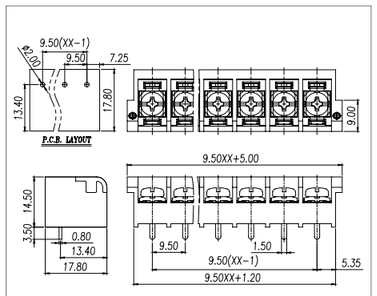

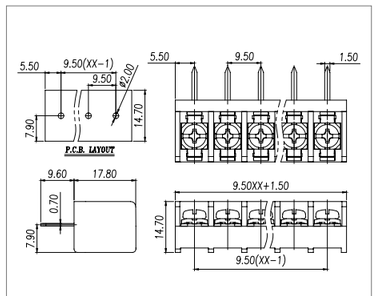

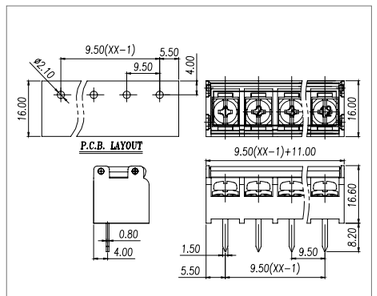

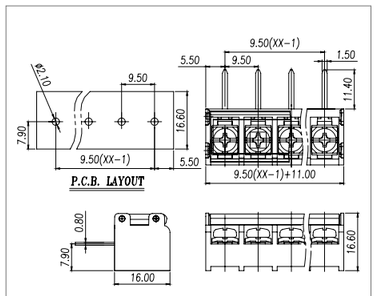

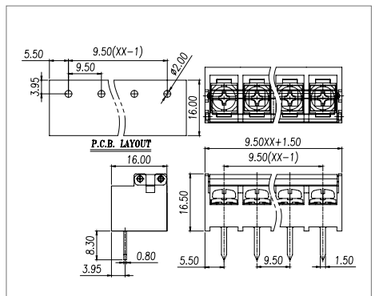



Pitch:9.5mm

MODEL: WJ46GG



Pitch:11.1mm

MODEL: WJ66



Pitch:11.1mm

MODEL: WJ66A

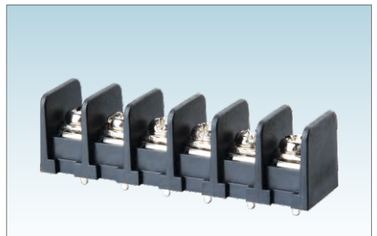

Pitch:9.5mm

MODEL: WJ45X



Pitch:9.5mm

MODEL: WJ48RW

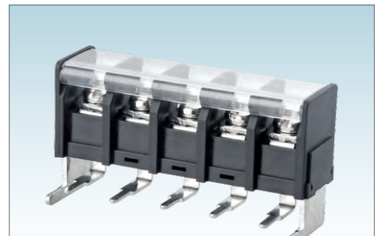

Pitch:10.0mm

MODEL: WJ58RW

认证/CERTIFICATION	cULus
材质及电镀	
螺丝	M4.0, 钢 镀镍
焊脚	铜合金, 镀锡
塑件	PA66, UL94V-0
电气性能	
参考标准	UL / IEC
额定电压	300V / 400V
额定电流	20A / 24A
使用线径	22-12AWG / 2.5mm²
接触电阻	20mΩ
绝缘电阻	500MΩ/DC500V
耐电压	AC2000V/1Min
机械性能	
温度范围	-40℃~+105℃
扭矩	12.24kgf-cm/1.2Nm/10.6Lbin

认证/CERTIFICATION	cULus
材质及电镀	
螺丝	M4.0, 钢 镀镍
焊脚	铜合金, 镀锡
塑件	PA66, UL94V-0
电气性能	
参考标准	UL / IEC
额定电压	300V / 500V
额定电流	30A / 32A
使用线径	22-10AWG / 4.0mm²
接触电阻	20mΩ
绝缘电阻	500MΩ/DC500V
耐电压	AC2000V/1Min
机械性能	
温度范围	-40℃~+105℃
扭矩	12.24kgf-cm/1.2Nm/10.6Lbin

认证/CERTIFICATION	cULus
材质及电镀	
螺丝	M4.0, 钢 镀镍
焊脚	铜合金, 镀锡
塑件	PA66, UL94V-0
电气性能	
参考标准	UL / IEC
额定电压	300V / 500V
额定电流	30A / 32A
使用线径	22-10AWG / 4.0mm²
接触电阻	20mΩ
绝缘电阻	500MΩ/DC500V
耐电压	AC2000V/1Min
机械性能	
温度范围	-40℃~+105℃
扭矩	12.24kgf-cm/1.2Nm/10.6Lbin

MATERIAL	
Screw	M4.0 Steel Ni plated
Pin Herder	Copper alloy, Sn Plated
Housing	PA66, UL94V-0
ELECTRICAL	
Standard	UL / IEC
Rated voltage	300V / 400V
Rated current	20A / 24A
Wire range	22-12AWG / 2.5mm²
Contact resistance	20mΩ
Insulation resistance	500MΩ/DC500V
Withstanding voltage	AC2000V/1Min
MECHANICAL	
Temp. range	-40℃~+105℃
Torque	12.24kgf-cm/1.2Nm/10.6Lbin

MATERIAL	
Screw	M4.0 Steel Ni plated
Pin Herder	Copper alloy, Sn Plated
Housing	PA66, UL94V-0
ELECTRICAL	
Standard	UL / IEC
Rated voltage	300V / 500V
Rated current	30A / 32A
Wire range	22-10AWG / 4.0mm²
Contact resistance	20mΩ
Insulation resistance	500MΩ/DC500V
Withstanding voltage	AC2000V/1Min
MECHANICAL	
Temp. range	-40℃~+105℃
Torque	12.24kgf-cm/1.2Nm/10.6Lbin

MATERIAL	
Screw	M4.0 Steel Ni plated
Pin Herder	Copper alloy, Sn Plated
Housing	PA66, UL94V-0
ELECTRICAL	
Standard	UL / IEC
Rated voltage	300V / 500V
Rated current	30A / 32A
Wire range	22-10AWG / 4.0mm²
Contact resistance	20mΩ
Insulation resistance	500MΩ/DC500V
Withstanding voltage	AC2000V/1Min
MECHANICAL	
Temp. range	-40℃~+105℃
Torque	12.24kgf-cm/1.2Nm/10.6Lbin

认证/CERTIFICATION	cULus
材质及电镀	
螺丝	M4.0, 钢 镀镍
焊脚	铜合金, 镀锡
塑件	PA66, UL94V-0
电气性能	
参考标准	UL / IEC
额定电压	300V / 400V
额定电流	20A / 24A
使用线径	22-12AWG / 2.5mm²
接触电阻	20mΩ
绝缘电阻	500MΩ/DC500V
耐电压	AC2000V/1Min
机械性能	
温度范围	-40℃~+105℃
扭矩	12.24kgf-cm/1.2Nm/10.6Lbin

认证/CERTIFICATION	cULus
材质及电镀	
螺丝	M4.0, 钢 镀镍
焊脚	铜合金, 镀锡
塑件	PA66, UL94V-0
电气性能	
参考标准	UL / IEC
额定电压	300V / 400V
额定电流	20A / 24A
使用线径	22-12AWG / 2.5mm²
接触电阻	20mΩ
绝缘电阻	500MΩ/DC500V
耐电压	AC2000V/1Min
机械性能	
温度范围	-40℃~+105℃
扭矩	12.24kgf-cm/1.2Nm/10.6Lbin

认证/CERTIFICATION	cULus
材质及电镀	
螺丝	M4.0, 钢 镀镍
焊脚	铜合金, 镀锡
塑件	PA66, UL94V-0
电气性能	
参考标准	UL / IEC
额定电压	300V / 400V
额定电流	20A / 24A
使用线径	22-12AWG / 2.5mm²
接触电阻	20mΩ
绝缘电阻	500MΩ/DC500V
耐电压	AC2000V/1Min
机械性能	
温度范围	-40℃~+105℃
扭矩	12.24kgf-cm/1.2Nm/10.6Lbin

MATERIAL	
Screw	M4.0 Steel Ni plated
Pin Herder	Copper alloy, Sn Plated
Housing	PA66, UL94V-0
ELECTRICAL	
Standard	UL / IEC
Rated voltage	300V / 400V
Rated current	20A / 24A
Wire range	22-12AWG / 2.5mm²
Contact resistance	20mΩ
Insulation resistance	500MΩ/DC500V
Withstanding voltage	AC2000V/1Min
MECHANICAL	
Temp. range	-40℃~+105℃
Torque	12.24kgf-cm/1.2Nm/10.6Lbin

MATERIAL	
Screw	M4.0 Steel Ni plated
Pin Herder	Copper alloy, Sn Plated
Housing	PA66, UL94V-0
ELECTRICAL	
Standard	UL / IEC
Rated voltage	300V / 400V
Rated current	20A / 24A
Wire range	22-12AWG / 2.5mm²
Contact resistance	20mΩ
Insulation resistance	500MΩ/DC500V
Withstanding voltage	AC2000V/1Min
MECHANICAL	
Temp. range	-40℃~+105℃
Torque	12.24kgf-cm/1.2Nm/10.6Lbin

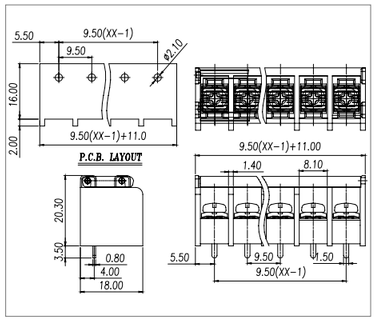

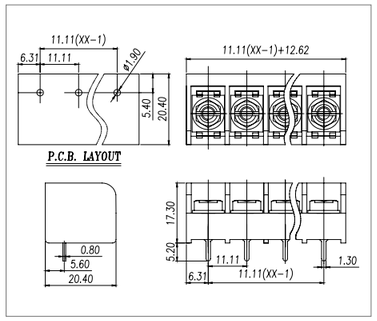

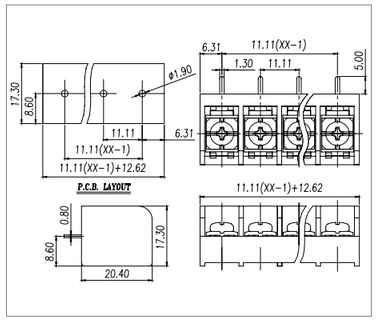

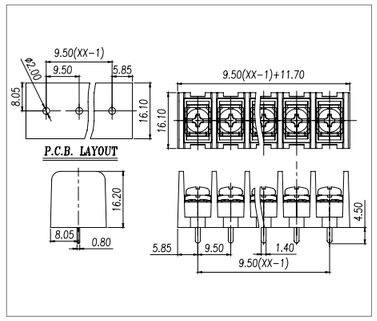

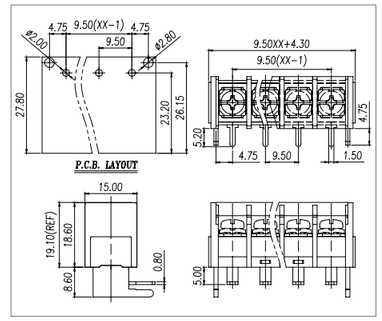

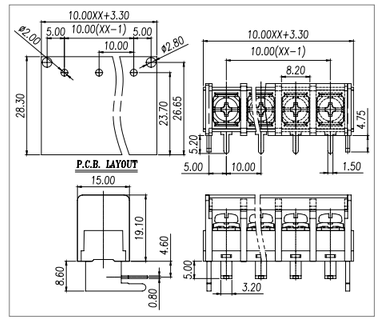



MODEL: WJ88

认证/CERTIFICATION	
材质及电镀	
螺丝	M6.0, 钢 镀锌
焊脚	铜合金, 镀锡
塑件	PBT , UL94V-0
电气性能	
参考标准	UL
额定电压	600V
额定电流	100A
使用线径	14-3AWG
接触电阻	20mΩ
绝缘电阻	500MΩ/DC500V
耐电压	AC2200V/1Min
机械性能	
温度范围	-40℃~+130℃
扭矩	26Lb.in(30kgf.cm)

MATERIAL	
Screw	M6.0 Steel Zn plated
Pin Herder	Copper alloy, Sn Plated
Housing	PBT , UL94V-0
ELECTRICAL	
Standard	UL
Rated voltage	600V
Rated current	100A
Wire range	14-3AWG
Contact resistance	20mΩ
Insulation resistance	500MΩ/DC500V
Withstanding voltage	AC2200V/1Min
MECHANICAL	
Temp. range	-40℃~+130℃
Torque	26Lb.in(30kgf.cm)

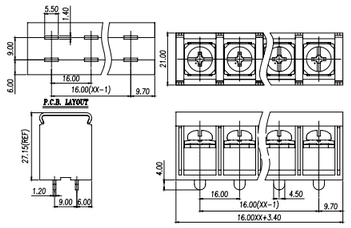

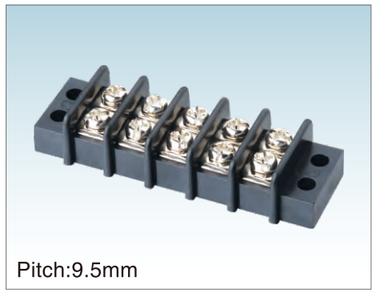

MODEL: WJ49M

认证/CERTIFICATION		
材质及电镀		
螺丝	M3.5, 钢 镀镍	
焊脚	铜合金, 镀镍	
塑件	PA66, UL94V-0	
电气性能		
参考标准	UL	IEC
额定电压	300V	250V
额定电流	20A	24A
使用线径	22-12AWG	2.5mm²
接触电阻	20mΩ	
绝缘电阻	500MΩ/DC500V	
耐电压	AC2000V/1Min	
机械性能		
温度范围	-40℃~+105℃	
扭矩	8.16kgf-cm/0.8Nm/ 7.0Lbin	

MATERIAL		
Screw	M3.5 Steel Ni plated	
Pin Herder	Copper alloy, Ni Plated	
Housing	PA66, UL94V-0	
ELECTRICAL		
Standard	UL	IEC
Rated voltage	300V	250V
Rated current	20A	32A
Wire range	22-12AWG	4.0mm²
Contact resistance	20mΩ	
Insulation resistance	500MΩ/DC500V	
Withstanding voltage	AC2000V/1Min	
MECHANICAL		
Temp. range	-40℃~+105℃	
Torque	8.16kgf-cm/0.8Nm/ 7.0Lbin	

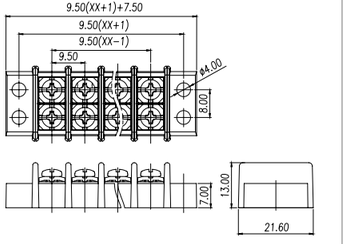



MODEL:WJ69M

认证/CERTIFICATION		
材质及电镀		
螺丝	M3.5, 钢 镀镍	
焊脚	铜合金, 镀镍	
塑件	PA66, UL94V-0	
电气性能		
参考标准	UL	IEC
额定电压	300V	500V
额定电流	25A	32A
使用线径	22-12AWG	2.5mm²
接触电阻	20mΩ	
绝缘电阻	500MΩ/DC500V	
耐电压	AC2000V/1Min	
机械性能		
温度范围	-40℃~+105℃	
扭矩	8.16kgf-cm/0.8Nm/ 7.0Lbin	

MATERIAL		
Screw	M3.5 Steel Ni plated	
Pin Herder	Copper alloy, Ni Plated	
Housing	PA66, UL94V-0	
ELECTRICAL		
Standard	UL	IEC
Rated voltage	300V	500V
Rated current	25A	32A
Wire range	22-12AWG	2.5mm²
Contact resistance	20mΩ	
Insulation resistance	500MΩ/DC500V	
Withstanding voltage	AC2000V/1Min	
MECHANICAL		
Temp. range	-40℃~+105℃	
Torque	8.16kgf-cm/0.8Nm/ 7.0Lbin	

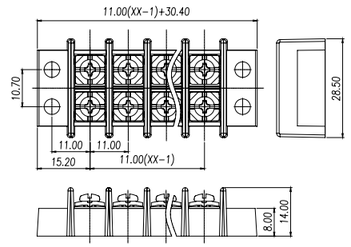



MODEL:WJ89M

认证/CERTIFICATION		
材质及电镀		
螺丝	M4.0, 钢 镀镍	
焊脚	铜合金, 镀镍	
塑件	PA66, UL94V-0	
电气性能		
参考标准	UL	IEC
额定电压	600V	500V
额定电流	30A	41A
使用线径	22-10AWG	6.0mm²
接触电阻	20mΩ	
绝缘电阻	500MΩ/DC500V	
耐电压	AC2000V/1Min	
机械性能		
温度范围	-40℃~+105℃	
扭矩	8.16kgf-cm/0.8Nm/ 7.0Lbin	

MATERIAL		
Screw	M4.0 Steel Ni plated	
Pin Herder	Copper alloy, Ni Plated	
Housing	PA66, UL94V-0	
ELECTRICAL		
Standard	UL	IEC
Rated voltage	600V	500V
Rated current	30A	41A
Wire range	22-10AWG	6.0mm²
Contact resistance	20mΩ	
Insulation resistance	500MΩ/DC500V	
Withstanding voltage	AC2000V/1Min	
MECHANICAL		
Temp. range	-40℃~+105℃	
Torque	8.16kgf-cm/0.8Nm/ 7.0Lbin	

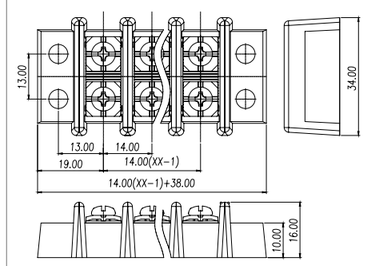

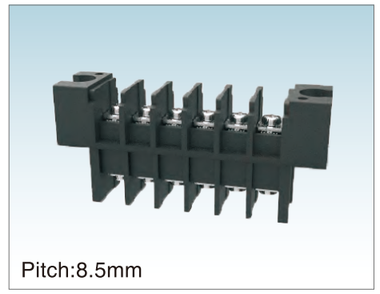

MODEL:WJ10-8.5

认证/CERTIFICATION	
材质及电镀	
螺丝	M3.0, 钢 镀镍
焊脚	铜合金, 镀锡
塑件	PBT , UL94V-0
电气性能	
参考标准	UL
额定电压	300V
额定电流	20A
使用线径	22-12AWG
接触电阻	20mΩ
绝缘电阻	500MΩ/DC500V
耐电压	AC2000V/1Min
机械性能	
温度范围	-40℃~+130℃
扭矩	10.2kgf-cm/1.0Nm/8.85Lbin

MATERIAL	
Screw	M3.0 Steel Ni plated
Pin Herder	Copper alloy, Sn Plated
Housing	PBT , UL94V-0
ELECTRICAL	
Standard	UL
Rated voltage	300V
Rated current	20A
Wire range	22-12AWG
Contact resistance	20mΩ
Insulation resistance	500MΩ/DC500V
Withstanding voltage	AC2000V/1Min
MECHANICAL	
Temp. range	-40℃~+130℃
Torque	10.2kgf-cm/1.0Nm/8.85Lbin

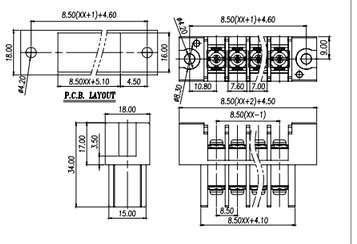

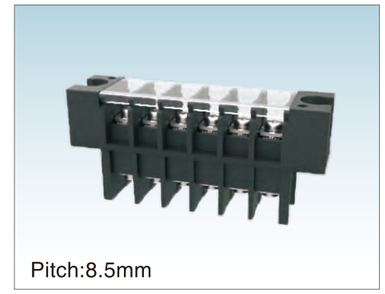

MODEL:WJ10C-8.5

认证/CERTIFICATION	
材质及电镀	
螺丝	M3.0, 钢 镀镍
焊脚	铜合金, 镀锡
塑件	PBT , UL94V-0
电气性能	
参考标准	UL
额定电压	300V
额定电流	20A
使用线径	22-12AWG
接触电阻	20mΩ
绝缘电阻	500MΩ/DC500V
耐电压	AC2000V/1Min
机械性能	
温度范围	-40℃~+130℃
扭矩	10.2kgf-cm/1.0Nm/8.85Lbin

MATERIAL	
Screw	M3.0 Steel Ni plated
Pin Herder	Copper alloy, Sn Plated
Housing	PBT , UL94V-0
ELECTRICAL	
Standard	UL
Rated voltage	300V
Rated current	20A
Wire range	22-12AWG
Contact resistance	20mΩ
Insulation resistance	500MΩ/DC500V
Withstanding voltage	AC2000V/1Min
MECHANICAL	
Temp. range	-40℃~+130℃
Torque	10.2kgf-cm/1.0Nm/8.85Lbin

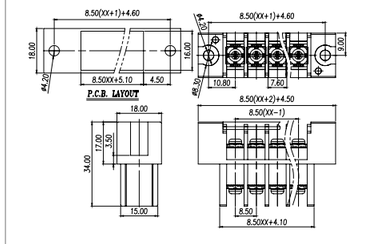

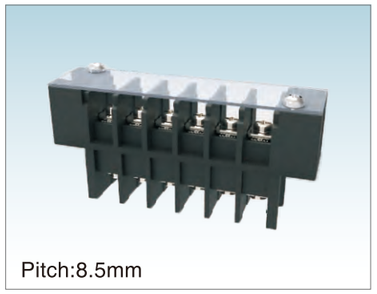

MODEL:WJ10L-8.5

认证/CERTIFICATION	
材质及电镀	
螺丝	M3.0, 钢 镀镍
焊脚	铜合金, 镀锡
塑件	PBT , UL94V-0
电气性能	
参考标准	UL
额定电压	300V
额定电流	20A
使用线径	22-12AWG
接触电阻	20mΩ
绝缘电阻	500MΩ/DC500V
耐电压	AC2000V/1Min
机械性能	
温度范围	-40℃~+130℃
扭矩	10.2kgf-cm/1.0Nm/8.85Lbin

MATERIAL	
Screw	M3.0 Steel Ni plated
Pin Herder	Copper alloy, Sn Plated
Housing	PBT , UL94V-0
ELECTRICAL	
Standard	UL
Rated voltage	300V
Rated current	20A
Wire range	22-12AWG
Contact resistance	20mΩ
Insulation resistance	500MΩ/DC500V
Withstanding voltage	AC2000V/1Min
MECHANICAL	
Temp. range	-40℃~+130℃
Torque	10.2kgf-cm/1.0Nm/8.85Lbin

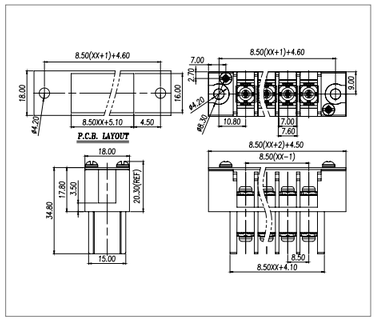

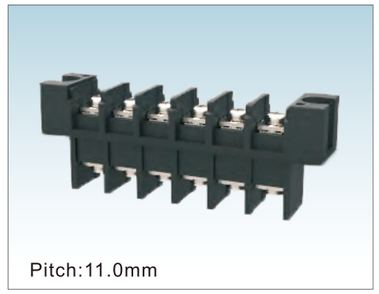

MODEL:WJ10-11.0

认证/CERTIFICATION	
材质及电镀	
螺丝	M4.0, 钢 镀镍
焊脚	铜合金, 镀锡
塑件	PBT, UL94V-0
电气性能	
参考标准	UL
额定电压	300V
额定电流	30A
使用线径	22-10AWG
接触电阻	20mΩ
绝缘电阻	500MΩ/DC500V
耐电压	AC2000V/1Min
机械性能	
温度范围	-40℃~+130℃
扭矩	18.35kgf-cm/1.8Nm/15.9Lbin

MATERIAL	
Screw	M4.0 Steel Ni plated
Pin Herder	Copper alloy, Sn Plated
Housing	PBT, UL94V-0
ELECTRICAL	
Standard	UL
Rated voltage	300V
Rated current	30A
Wire range	22-10AWG
Contact resistance	20mΩ
Insulation resistance	500MΩ/DC500V
Withstanding voltage	AC2000V/1Min
MECHANICAL	
Temp. range	-40℃~+130℃
Torque	18.35kgf-cm/1.8Nm/15.9Lbin

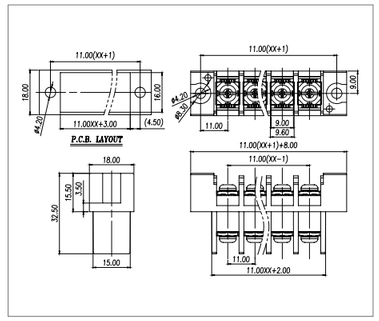

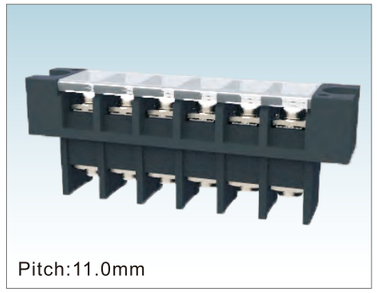

MODEL:WJ10C-11.0

认证/CERTIFICATION	
材质及电镀	
螺丝	M4.0, 钢 镀镍
焊脚	铜合金, 镀锡
塑件	PBT, UL94V-0
电气性能	
参考标准	UL
额定电压	300V
额定电流	30A
使用线径	22-10AWG
接触电阻	20mΩ
绝缘电阻	500MΩ/DC500V
耐电压	AC2000V/1Min
机械性能	
温度范围	-40℃~+130℃
扭矩	18.35kgf-cm/1.8Nm/15.9Lbin

MATERIAL	
Screw	M4.0 Steel Ni plated
Pin Herder	Copper alloy, Sn Plated
Housing	PBT, UL94V-0
ELECTRICAL	
Standard	UL
Rated voltage	300V
Rated current	30A
Wire range	22-10AWG
Contact resistance	20mΩ
Insulation resistance	500MΩ/DC500V
Withstanding voltage	AC2000V/1Min
MECHANICAL	
Temp. range	-40℃~+130℃
Torque	18.35kgf-cm/1.8Nm/15.9Lbin

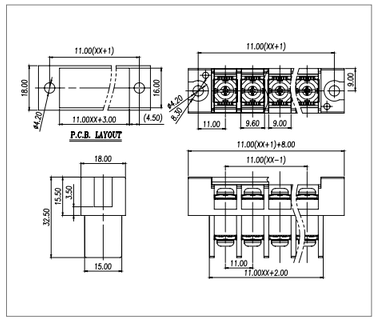

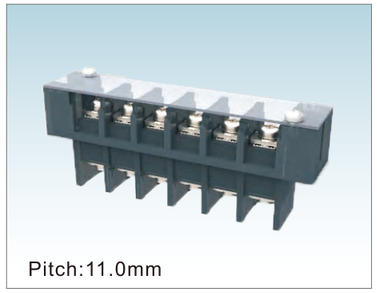

MODEL:WJ10L-11.0

认证/CERTIFICATION	
材质及电镀	
螺丝	M4.0, 钢 镀镍
焊脚	铜合金, 镀锡
塑件	PBT, UL94V-0
电气性能	
参考标准	UL
额定电压	300V
额定电流	30A
使用线径	22-10AWG
接触电阻	20mΩ
绝缘电阻	500MΩ/DC500V
耐电压	AC2000V/1Min
机械性能	
温度范围	-40℃~+130℃
扭矩	18.35kgf-cm/1.8Nm/15.9Lbin

MATERIAL	
Screw	M4.0 Steel Ni plated
Pin Herder	Copper alloy, Sn Plated
Housing	PBT, UL94V-0
ELECTRICAL	
Standard	UL
Rated voltage	300V
Rated current	30A
Wire range	22-10AWG
Contact resistance	20mΩ
Insulation resistance	500MΩ/DC500V
Withstanding voltage	AC2000V/1Min
MECHANICAL	
Temp. range	-40℃~+130℃
Torque	18.35kgf-cm/1.8Nm/15.9Lbin

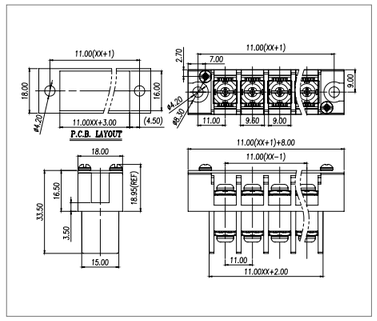

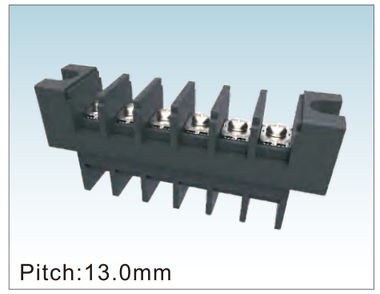

MODEL:WJ10-13.0

认证/CERTIFICATION	
材质及电镀	
螺丝	M4.0, 钢 镀镍
焊脚	铜合金, 镀锡
塑件	PBT, UL94V-0
电气性能	
参考标准	UL
额定电压	600V
额定电流	50A
使用线径	22-8 AWG
接触电阻	20mΩ
绝缘电阻	1000MΩ/DC500V
耐电压	AC2500V/1Min
机械性能	
温度范围	-40℃~+130℃
扭矩	12.24kgf-cm/1.2Nm/10.6Lbin

MATERIAL	
Screw	M4.0 Steel Ni plated
Pin Herder	Copper alloy, Sn Plated
Housing	PBT, UL94V-0
ELECTRICAL	
Standard	UL
Rated voltage	600V
Rated current	50A
Wire range	22-8 AWG
Contact resistance	20mΩ
Insulation resistance	1000MΩ/DC500V
Withstanding voltage	AC2500V/1Min
MECHANICAL	
Temp. range	-40℃~+130℃
Torque	12.24kgf-cm/1.2Nm/10.6Lbin

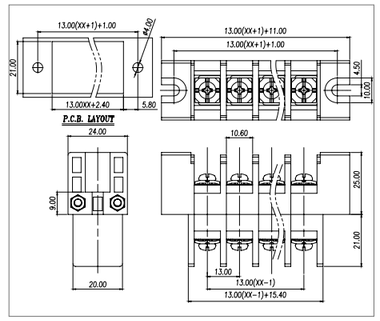

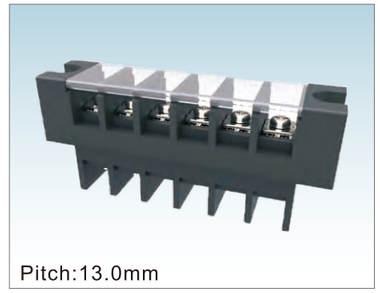

MODEL:WJ10C-13.0

认证/CERTIFICATION	
材质及电镀	
螺丝	M4.0, 钢 镀镍
焊脚	铜合金, 镀锡
塑件	PBT, UL94V-0
电气性能	
参考标准	UL
额定电压	600V
额定电流	50A
使用线径	22-8 AWG
接触电阻	20mΩ
绝缘电阻	1000MΩ/DC500V
耐电压	AC2500V/1Min
机械性能	
温度范围	-40℃~+130℃
扭矩	12.24kgf-cm/1.2Nm/10.6Lbin

MATERIAL	
Screw	M4.0 Steel Ni plated
Pin Herder	Copper alloy, Sn Plated
Housing	PBT, UL94V-0
ELECTRICAL	
Standard	UL
Rated voltage	600V
Rated current	50A
Wire range	22-8 AWG
Contact resistance	20mΩ
Insulation resistance	1000MΩ/DC500V
Withstanding voltage	AC2500V/1Min
MECHANICAL	
Temp. range	-40℃~+130℃
Torque	12.24kgf-cm/1.2Nm/10.6Lbin

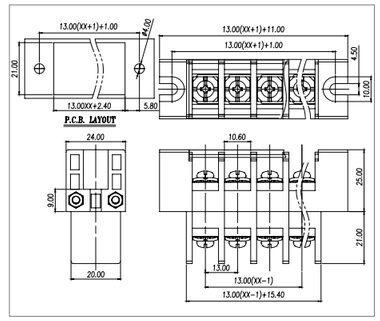

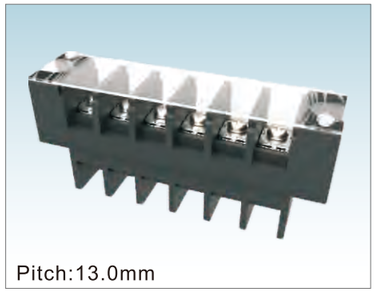

Pitch:13.0mm

MODEL:WJ10L-13.0

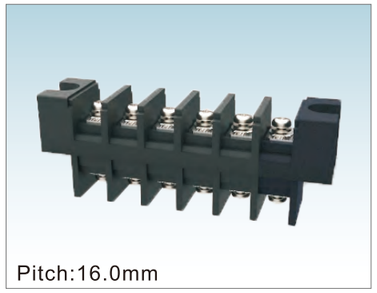

Pitch:16.0mm

MODEL:WJ10-16.0

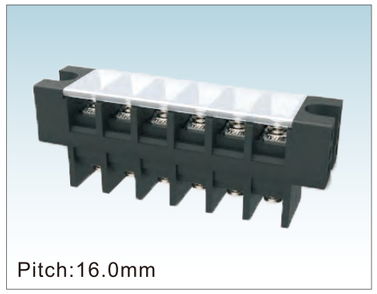

Pitch:16.0mm

MODEL:WJ10C-16.0

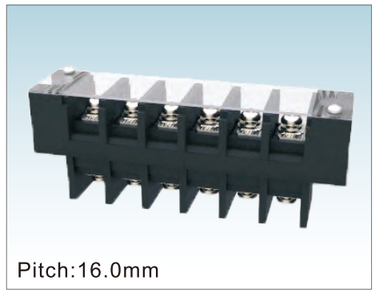

Pitch:16.0mm

MODEL:WJ10L-16.0

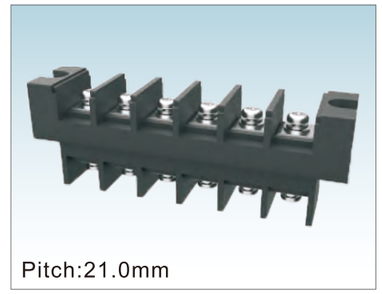

Pitch:21.0mm

MODEL:WJ10-21.0

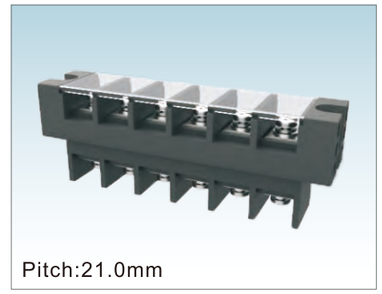

Pitch:21.0mm

MODEL:WJ10C-21.0

认证/CERTIFICATION	cULus
材质及电镀	
螺丝	M4.0, 钢 镀镍
焊脚	铜合金, 镀锡
塑件	PBT, UL94V-0
电气性能	
参考标准	UL
额定电压	600V
额定电流	50A
使用线径	22-8 AWG
接触电阻	20mΩ
绝缘电阻	1000MΩ/DC500V
耐电压	AC2500V/1Min
机械性能	
温度范围	-40℃~+130℃
扭矩	12.24kgf-cm/1.2Nm/10.6Lbin

认证/CERTIFICATION	cULus
材质及电镀	
螺丝	M5.0, 钢 镀锌
焊脚	铜合金, 镀锡
塑件	PBT, UL94V-0
电气性能	
参考标准	UL
额定电压	600V
额定电流	65A
使用线径	14-6 AWG
接触电阻	20mΩ
绝缘电阻	1000MΩ/DC500V
耐电压	AC2500V/1Min
机械性能	
温度范围	-40℃~+130℃
扭矩	25.5kgf-cm/2.5Nm/22.1Lbin

认证/CERTIFICATION	cULus
材质及电镀	
螺丝	M5.0, 钢 镀锌
焊脚	铜合金, 镀锡
塑件	PBT, UL94V-0
电气性能	
参考标准	UL
额定电压	600V
额定电流	65A
使用线径	14-6 AWG
接触电阻	20mΩ
绝缘电阻	1000MΩ/DC500V
耐电压	AC2500V/1Min
机械性能	
温度范围	-40℃~+130℃
扭矩	25.5kgf-cm/2.5Nm/22.1Lbin

认证/CERTIFICATION	cULus
材质及电镀	
螺丝	M5.0, 钢 镀锌
焊脚	铜合金, 镀锡
塑件	PBT, UL94V-0
电气性能	
参考标准	UL
额定电压	600V
额定电流	65A
使用线径	14-6 AWG
接触电阻	20mΩ
绝缘电阻	1000MΩ/DC500V
耐电压	AC2500V/1Min
机械性能	
温度范围	-40℃~+130℃
扭矩	25.5kgf-cm/2.5Nm/22.1Lbin

认证/CERTIFICATION	cULus
材质及电镀	
螺丝	M6.0, 钢 镀锌
焊脚	铜合金, 镀锡
塑件	PBT, UL94V-0
电气性能	
参考标准	UL
额定电压	600V
额定电流	115A
使用线径	8-2 AWG
接触电阻	20mΩ
绝缘电阻	1000MΩ/DC500V
耐电压	AC2500V/1Min
机械性能	
温度范围	-40℃~+130℃
扭矩	30.6kgf-cm/3.0Nm/26.6Lbin

认证/CERTIFICATION	cULus
材质及电镀	
螺丝	M6.0, 钢 镀锌
焊脚	铜合金, 镀锡
塑件	PBT, UL94V-0
电气性能	
参考标准	UL
额定电压	600V
额定电流	115A
使用线径	8-2 AWG
接触电阻	20mΩ
绝缘电阻	1000MΩ/DC500V
耐电压	AC2500V/1Min
机械性能	
温度范围	-40℃~+130℃
扭矩	30.6kgf-cm/3.0Nm/26.6Lbin

MATERIAL	
Screw	M4.0 Steel Ni plated
Pin Herder	Copper alloy, Sn Plated
Housing	PBT, UL94V-0
ELECTRICAL	
Standard	UL
Rated voltage	600V
Rated current	50A
Wire range	22-8 AWG
Contact resistance	20mΩ
Insulation resistance	1000MΩ/DC500V
Withstanding voltage	AC2500V/1Min
MECHANICAL	
Temp. range	-40℃~+130℃
Torque	12.24kgf-cm/1.2Nm/10.6Lbin

MATERIAL	
Screw	M5.0 Steel Zn plated
Pin Herder	Copper alloy, Sn Plated
Housing	PBT, UL94V-0
ELECTRICAL	
Standard	UL
Rated voltage	600V
Rated current	65A
Wire range	14-6 AWG
Contact resistance	20mΩ
Insulation resistance	1000MΩ/DC500V
Withstanding voltage	AC2500V/1Min
MECHANICAL	
Temp. range	-40℃~+130℃
Torque	25.5kgf-cm/2.5Nm/22.1Lbin

MATERIAL	
Screw	M5.0 Steel Zn plated
Pin Herder	Copper alloy, Sn Plated
Housing	PBT, UL94V-0
ELECTRICAL	
Standard	UL
Rated voltage	600V
Rated current	65A
Wire range	14-6 AWG
Contact resistance	20mΩ
Insulation resistance	1000MΩ/DC500V
Withstanding voltage	AC2500V/1Min
MECHANICAL	
Temp. range	-40℃~+130℃
Torque	25.5kgf-cm/2.5Nm/22.1Lbin

MATERIAL	
Screw	M5.0 Steel Zn plated
Pin Herder	Copper alloy, Sn Plated
Housing	PBT, UL94V-0
ELECTRICAL	
Standard	UL
Rated voltage	600V
Rated current	65A
Wire range	14-6 AWG
Contact resistance	20mΩ
Insulation resistance	1000MΩ/DC500V
Withstanding voltage	AC2500V/1Min
MECHANICAL	
Temp. range	-40℃~+130℃
Torque	25.5kgf-cm/2.5Nm/22.1Lbin

MATERIAL	
Screw	M6.0 Steel Zn plated
Pin Herder	Copper alloy, Sn Plated
Housing	PBT, UL94V-0
ELECTRICAL	
Standard	UL
Rated voltage	600V
Rated current	115A
Wire range	8-2 AWG
Contact resistance	20mΩ
Insulation resistance	1000MΩ/DC500V
Withstanding voltage	AC2500V/1Min
MECHANICAL	
Temp. range	-40℃~+130℃
Torque	30.6kgf-cm/3.0Nm/26.6Lbin

MATERIAL	
Screw	M6.0 Steel Zn plated
Pin Herder	Copper alloy, Sn Plated
Housing	PBT, UL94V-0
ELECTRICAL	
Standard	UL
Rated voltage	600V
Rated current	115A
Wire range	8-2 AWG
Contact resistance	20mΩ
Insulation resistance	1000MΩ/DC500V
Withstanding voltage	AC2500V/1Min
MECHANICAL	
Temp. range	-40℃~+130℃
Torque	30.6kgf-cm/3.0Nm/26.6Lbin

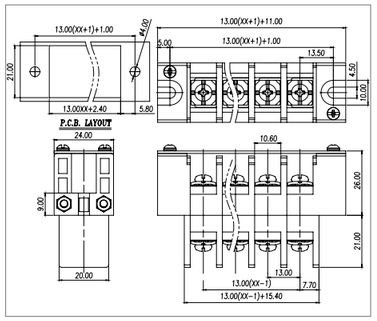

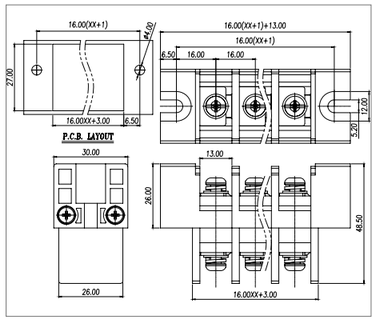

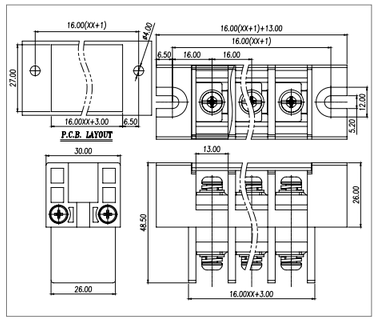

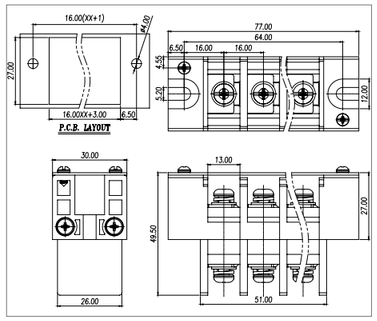

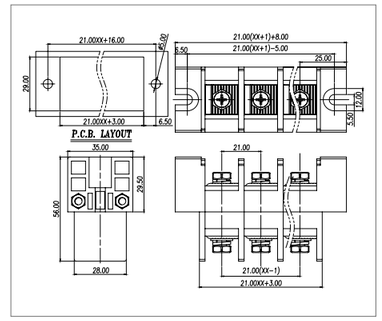

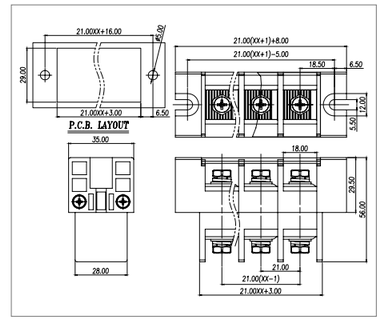

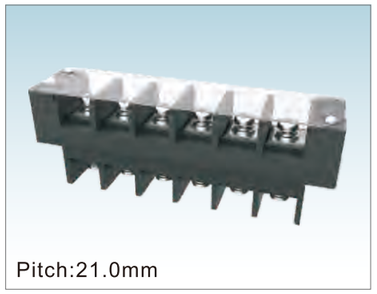

Pitch:21.0mm

MODEL:WJ10L-21.0

认证/CERTIFICATION	
材质及电镀	
螺丝	M6.0, 钢 镀锌
焊脚	铜合金, 镀锡
塑件	PBT, UL94V-0
电气性能	
参考标准	UL
额定电压	600V
额定电流	115A
使用线径	8-2 AWG
接触电阻	20mΩ
绝缘电阻	1000MΩ/DC500V
耐电压	AC2500V/1Min
机械性能	
温度范围	-40℃~+130℃
扭矩	30.6kgf-cm/3.0Nm/26.6Lbin

MATERIAL	
Screw	M6.0 Steel Zn plated
Pin Herder	Copper alloy, Sn Plated
Housing	PBT, UL94V-0
ELECTRICAL	
Standard	UL
Rated voltage	600V
Rated current	115A
Wire range	8-2 AWG
Contact resistance	20mΩ
Insulation resistance	1000MΩ/DC500V
Withstanding voltage	AC2500V/1Min
MECHANICAL	
Temp. range	-40℃~+130℃
Torque	30.6kgf-cm/3.0Nm/26.6Lbin

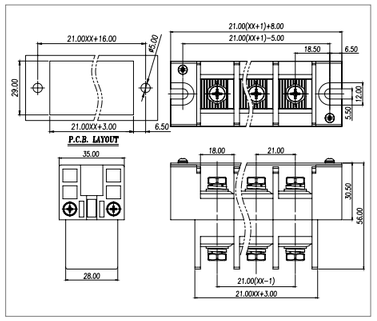

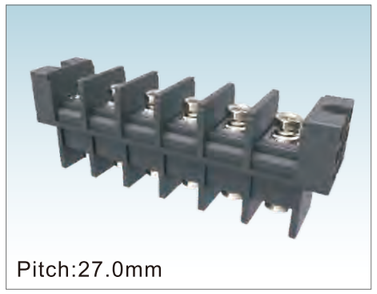

Pitch:27.0mm

MODEL:WJ10-27.0

认证/CERTIFICATION	
材质及电镀	
螺丝	M8.0, 钢 镀锌
焊脚	铜合金, 镀锡
塑件	PBT, UL94V-0
电气性能	
参考标准	UL
额定电压	600V
额定电流	170A
使用线径	10-2/0AWG
接触电阻	20mΩ
绝缘电阻	1000MΩ/DC500V
耐电压	AC2500V/1Min
机械性能	
温度范围	-40℃~+130℃
扭矩	61.2kgf-cm/6.0Nm/53.1Lbin

MATERIAL	
Screw	M8.0 Steel Zn plated
Pin Herder	Copper alloy, Sn Plated
Housing	PBT, UL94V-0
ELECTRICAL	
Standard	UL
Rated voltage	600V
Rated current	170A
Wire range	10-2/0AWG
Contact resistance	20mΩ
Insulation resistance	1000MΩ/DC500V
Withstanding voltage	AC2500V/1Min
MECHANICAL	
Temp. range	-40℃~+130℃
Torque	61.2kgf-cm/6.0Nm/53.1Lbin

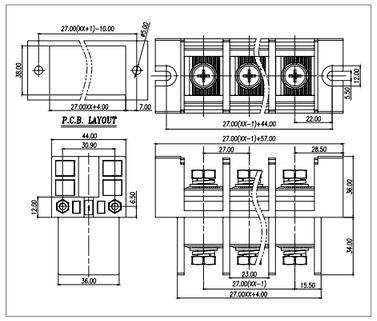

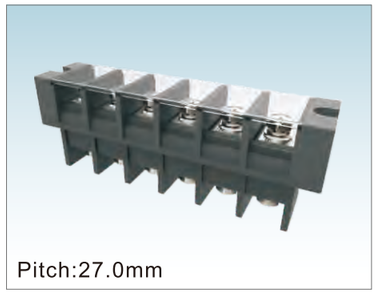

Pitch:27.0mm

MODEL:WJ10C-27.0

认证/CERTIFICATION	
材质及电镀	
螺丝	M8.0, 钢 镀锌
焊脚	铜合金, 镀锡
塑件	PBT, UL94V-0
电气性能	
参考标准	UL
额定电压	600V
额定电流	170A
使用线径	10-2/0AWG
接触电阻	20mΩ
绝缘电阻	1000MΩ/DC500V
耐电压	AC2500V/1Min
机械性能	
温度范围	-40℃~+130℃
扭矩	61.2kgf-cm/6.0Nm/53.1Lbin

MATERIAL	
Screw	M8.0 Steel Zn plated
Pin Herder	Copper alloy, Sn Plated
Housing	PBT, UL94V-0
ELECTRICAL	
Standard	UL
Rated voltage	600V
Rated current	170A
Wire range	10-2/0AWG
Contact resistance	20mΩ
Insulation resistance	1000MΩ/DC500V
Withstanding voltage	AC2500V/1Min
MECHANICAL	
Temp. range	-40℃~+130℃
Torque	61.2kgf-cm/6.0Nm/53.1Lbin

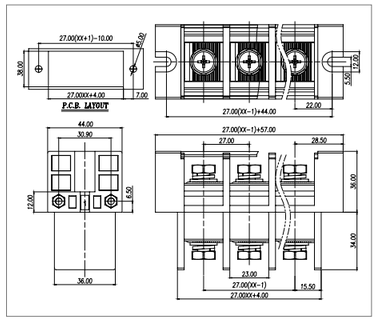

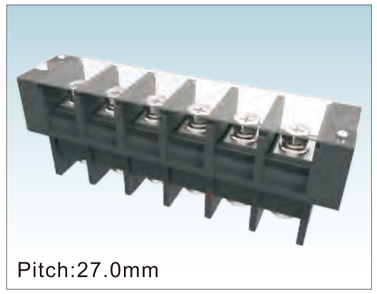

Pitch:27.0mm

MODEL:WJ10L-27.0

认证/CERTIFICATION	
材质及电镀	
螺丝	M8.0, 钢 镀锌
焊脚	铜合金, 镀锡
塑件	PBT, UL94V-0
电气性能	
参考标准	UL
额定电压	600V
额定电流	170A
使用线径	10-2/0AWG
接触电阻	20mΩ
绝缘电阻	1000MΩ/DC500V
耐电压	AC2500V/1Min
机械性能	
温度范围	-40℃~+130℃
扭矩	61.2kgf-cm/6.0Nm/53.1Lbin

MATERIAL	
Screw	M8.0 Steel Zn plated
Pin Herder	Copper alloy, Sn Plated
Housing	PBT, UL94V-0
ELECTRICAL	
Standard	UL
Rated voltage	600V
Rated current	170A
Wire range	10-2/0AWG
Contact resistance	20mΩ
Insulation resistance	1000MΩ/DC500V
Withstanding voltage	AC2500V/1Min
MECHANICAL	
Temp. range	-40℃~+130℃
Torque	61.2kgf-cm/6.0Nm/53.1Lbin

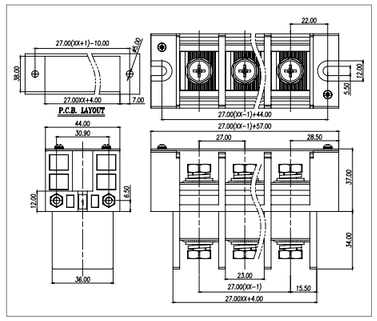

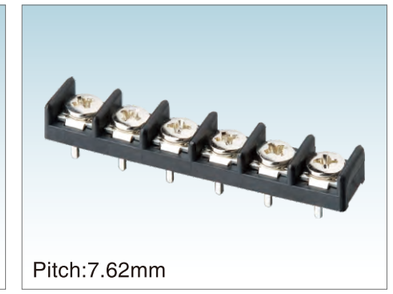

Pitch:7.62mm

MODEL: CZX7620

认证/CERTIFICATION		
材质及电镀		
螺丝	M3,钢，镀镍	
焊脚	铜合金, 镀锡	
塑件	PA66，UL94V-0	
电气性能		
参考标准	UL	IEC
额定电压	300V	450V
额定电流	15A	17.5A
使用线径	22-14AWG	1.5mm²
接触电阻	20mΩ	
绝缘电阻	500MΩ/DC500V	
耐电压	AC2000V/1Min	
机械性能		
温度范围	-40℃~+105℃	
扭矩	5.1kgf-cm/0.5Nm/4.43Lbin	

MATERIAL		
Screw	M3.0 Steel Ni plated	
Pin Herder	Copper alloy, Sn Plated	
Housing	PA66, UL94V-0	
ELECTRICAL		
Standard	UL	IEC
Rated voltage	300V	450V
Rated current	15A	17.5A
Wire range	22-14AWG	1.5mm²
Contact resistance	20mΩ	
Insulation resistance	500MΩ/DC500V	
Withstanding voltage	AC2000V/1Min	
MECHANICAL		
Temp. range	-40℃~+105℃	
Torque	5.1kgf-cm/0.5Nm/4.43Lbin	

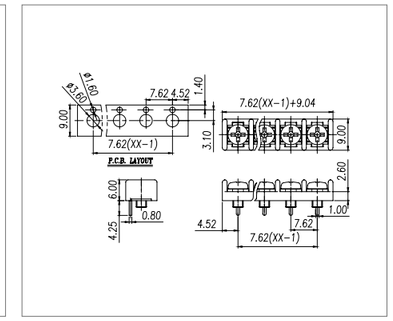

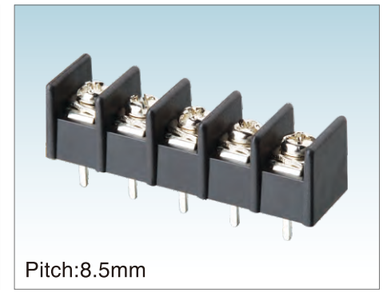

Pitch:8.5mm

MODEL: CZ8500

认证/CERTIFICATION		
材质及电镀		
螺丝	M3.0, 钢 镀镍	
焊脚	铜合金, 镀锡	
塑件	PA66, UL94V-0	
电气性能		
参考标准	UL	IEC
额定电压	300V	450V
额定电流	15A	17.5A
使用线径	22-14AWG	1.5mm²
接触电阻	20mΩ	
绝缘电阻	500MΩ/DC500V	
耐电压	AC2000V/1Min	
机械性能		
温度范围	-40℃~+105℃	
扭矩	5.1kgf-cm/0.5Nm/4.43Lbin	

MATERIAL		
Screw	M3.0 Steel Ni plated	
Pin Herder	Copper alloy, Sn Plated	
Housing	PA66, UL94V-0	
ELECTRICAL		
Standard	UL	IEC
Rated voltage	300V	450V
Rated current	15A	17.5A
Wire range	22-14AWG	1.5mm²
Contact resistance	20mΩ	
Insulation resistance	500MΩ/DC500V	
Withstanding voltage	AC2000V/1Min	
MECHANICAL		
Temp. range	-40℃~+105℃	
Torque	5.1kgf-cm/0.5Nm/4.43Lbin	

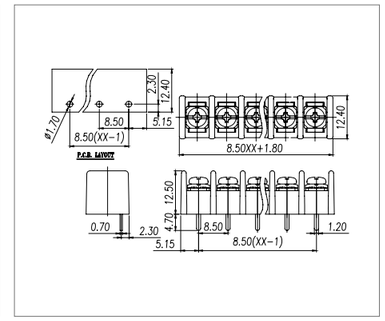


Pitch:9.0mm

MODEL: WJTB15

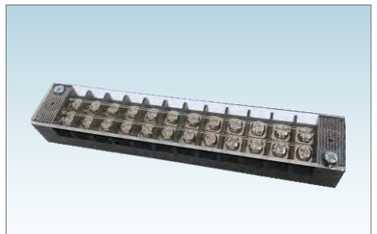
Pitch:9.0mm

WJTBD15


Pitch:11.0mm

MODEL: EM-1


Pitch:11.0mm

MODEL: EM-1A


Pitch:11.0mm

MODEL: EM-2


Pitch:11.0mm

MODEL: EM-2A

认证/CERTIFICATION	
材质及电镀	
螺丝	M3.0, 钢 镀镍
导电板	铜合金 , 镀镍
塑件	PBT , UL94V-0
电气性能	
参考标准	UL / IEC
额定电压	300V / 450V
额定电流	20A / 32A
使用线径	22-12AWG / 4.0mm²
接触电阻	20mΩ
绝缘电阻	500MΩ/DC500V
耐电压	AC1600V/1Min
机械性能	
温度范围	-30℃~+120℃
扭矩	5.1Kgf-cm/0.5Nm/4.3Lbin

MATERIAL	
Screw	M3.0 Steel Ni plated
Pin Herder	Copper alloy, Ni Plated
Housing	PBT , UL94V-0
ELECTRICAL	
Standard	UL / IEC
Rated voltage	300V / 450V
Rated current	20A / 32A
Wire range	22-12AWG / 4.0mm²
Contact resistance	20mΩ
Insulation resistance	500MΩ/DC500V
Withstanding voltage	AC1600V/1Min
MECHANICAL	
Temp. range	-30℃~+120℃
Torque	5.1Kgf-cm/0.5Nm/4.3Lbin

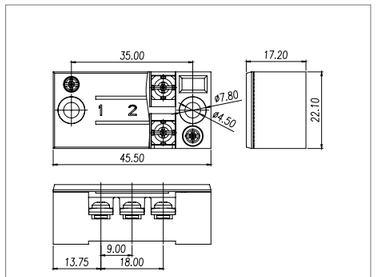

认证/CERTIFICATION	
材质及电镀	
螺丝	M3.0, 钢 镀镍
导电板	铜合金 , 镀镍
塑件	PBT , UL94V-0
电气性能	
参考标准	UL / IEC
额定电压	300V / 450V
额定电流	20A / 32A
使用线径	22-12AWG / 4.0mm²
接触电阻	20mΩ
绝缘电阻	500MΩ/DC500V
耐电压	AC1600V/1Min
机械性能	
温度范围	-30℃~+120℃
扭矩	5.1Kgf-cm/0.5Nm/4.3Lbin

MATERIAL	
Screw	M3.0 Steel Ni plated
Pin Herder	Copper alloy, Ni Plated
Housing	PBT , UL94V-0
ELECTRICAL	
Standard	UL / IEC
Rated voltage	300V / 450V
Rated current	20A / 32A
Wire range	22-12AWG / 4.0mm²
Contact resistance	20mΩ
Insulation resistance	500MΩ/DC500V
Withstanding voltage	AC1600V/1Min
MECHANICAL	
Temp. range	-30℃~+120℃
Torque	5.1Kgf-cm/0.5Nm/4.3Lbin

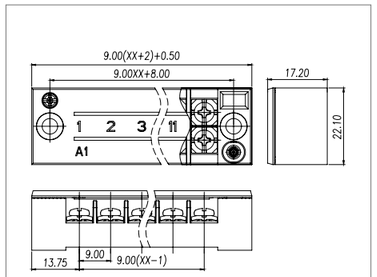

认证/CERTIFICATION	
材质及电镀	
螺丝	M4.0, 钢 镀金
焊脚	铜合金, 镀金
塑件	PA66, UL94V-0
电气性能	
参考标准	UL / IEC
额定电压	300V / 450V
额定电流	20A / 32A
使用线径	22-12AWG / 4.0mm²
接触电阻	20mΩ
绝缘电阻	500MΩ/DC500V
耐电压	AC2000V/1Min
机械性能	
温度范围	-40℃~+105℃
扭矩	12.24kgf-cm/1.2Nm/10.6Lbin

MATERIAL	
Screw	M4.0 Steel Au plated
Pin Herder	Copper alloy, Au Plated
Housing	PA66, UL94V-0
ELECTRICAL	
Standard	UL / IEC
Rated voltage	300V / 450V
Rated current	20A / 32A
Wire range	22-12AWG / 4.0mm²
Contact resistance	20mΩ
Insulation resistance	500MΩ/DC500V
Withstanding voltage	AC2000V/1Min
MECHANICAL	
Temp. range	-40℃~+105℃
Torque	12.24kgf-cm/1.2Nm/10.6Lbin

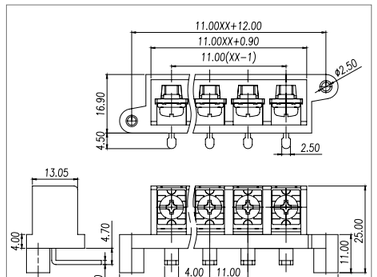

认证/CERTIFICATION	
材质及电镀	
螺丝	M4.0, 钢 镀金
焊脚	铜合金, 镀金
塑件	PA66, UL94V-0
电气性能	
参考标准	UL / IEC
额定电压	300V / 450V
额定电流	20A / 32A
使用线径	22-12AWG / 4.0mm²
接触电阻	20mΩ
绝缘电阻	500MΩ/DC500V
耐电压	AC2000V/1Min
机械性能	
温度范围	-40℃~+105℃
扭矩	12.24kgf-cm/1.2Nm/10.6Lbin

MATERIAL	
Screw	M4.0 Steel Au plated
Pin Herder	Copper alloy, Au Plated
Housing	PA66, UL94V-0
ELECTRICAL	
Standard	UL / IEC
Rated voltage	300V / 450V
Rated current	20A / 32A
Wire range	22-12AWG / 4.0mm²
Contact resistance	20mΩ
Insulation resistance	500MΩ/DC500V
Withstanding voltage	AC2000V/1Min
MECHANICAL	
Temp. range	-40℃~+105℃
Torque	12.24kgf-cm/1.2Nm/10.6Lbin

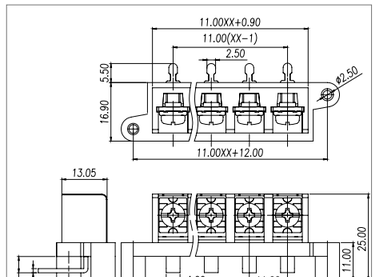

认证/CERTIFICATION	
材质及电镀	
螺丝	M4.0, 钢 镀金
焊脚	铜合金, 镀金
塑件	PA66, UL94V-0
电气性能	
参考标准	UL / IEC
额定电压	300V / 450V
额定电流	20A / 32A
使用线径	22-12AWG / 4.0mm²
接触电阻	20mΩ
绝缘电阻	500MΩ/DC500V
耐电压	AC2000V/1Min
机械性能	
温度范围	-40℃~+105℃
扭矩	12.24kgf-cm/1.2Nm/10.6Lbin

MATERIAL	
Screw	M4.0 Steel Au plated
Pin Herder	Copper alloy, Au Plated
Housing	PA66, UL94V-0
ELECTRICAL	
Standard	UL / IEC
Rated voltage	300V / 450V
Rated current	20A / 32A
Wire range	22-12AWG / 4.0mm²
Contact resistance	20mΩ
Insulation resistance	500MΩ/DC500V
Withstanding voltage	AC2000V/1Min
MECHANICAL	
Temp. range	-40℃~+105℃
Torque	12.24kgf-cm/1.2Nm/10.6Lbin

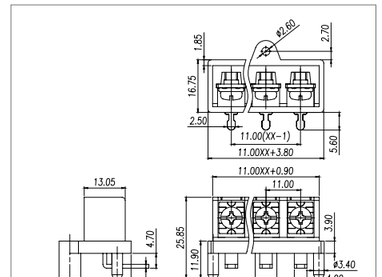

认证/CERTIFICATION	
材质及电镀	
螺丝	M4.0, 钢 镀金
焊脚	铜合金, 镀金
塑件	PA66, UL94V-0
电气性能	
参考标准	UL / IEC
额定电压	300V / 450V
额定电流	20A / 32A
使用线径	22-12AWG / 4.0mm²
接触电阻	20mΩ
绝缘电阻	500MΩ/DC500V
耐电压	AC2000V/1Min
机械性能	
温度范围	-40℃~+105℃
扭矩	12.24kgf-cm/1.2Nm/10.6Lbin

MATERIAL	
Screw	M4.0 Steel Au plated
Pin Herder	Copper alloy, Au Plated
Housing	PA66, UL94V-0
ELECTRICAL	
Standard	UL / IEC
Rated voltage	300V / 450V
Rated current	20A / 32A
Wire range	22-12AWG / 4.0mm²
Contact resistance	20mΩ
Insulation resistance	500MΩ/DC500V
Withstanding voltage	AC2000V/1Min
MECHANICAL	
Temp. range	-40℃~+105℃
Torque	12.24kgf-cm/1.2Nm/10.6Lbin

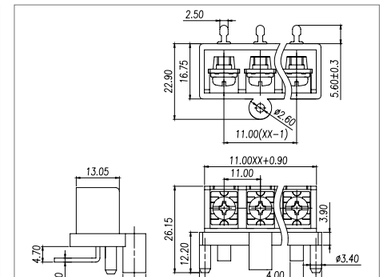



Pitch:11.5mm

MODEL: EM-3

认证/CERTIFICATION	CQC
材质及电镀	
螺丝	M4.0, 钢 镀金
焊脚	铜合金, 镀金
塑件	PA66, UL94V-0
电气性能	
参考标准	UL / IEC
额定电压	300V / 450V
额定电流	30A / 35A
使用线径	22-12AWG / 6.0mm²
接触电阻	20mΩ
绝缘电阻	500MΩ/DC500V
耐电压	AC2000V/1Min
机械性能	
温度范围	-40℃~+105℃
扭矩	12.24kgf-cm/1.2Nm/10.6Lbin

MATERIAL	
Screw	M4.0 Steel Au plated
Pin Herder	Copper alloy, Au Plated
Housing	PA66, UL94V-0
ELECTRICAL	
Standard	UL / IEC
Rated voltage	300V / 450V
Rated current	30A / 35A
Wire range	22-12AWG / 6.0mm²
Contact resistance	20mΩ
Insulation resistance	500MΩ/DC500V
Withstanding voltage	AC2000V/1Min
MECHANICAL	
Temp. range	-40℃~+105℃
Torque	12.24kgf-cm/1.2Nm/10.6Lbin

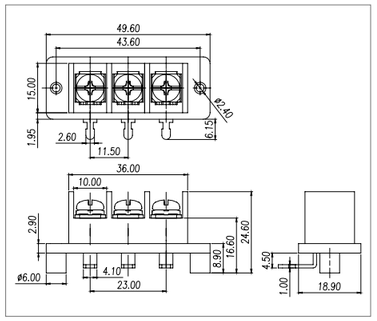

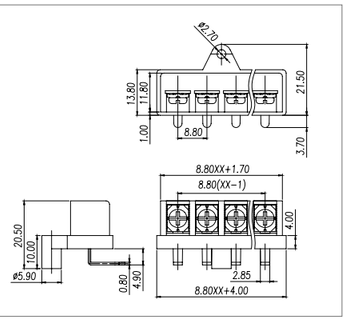

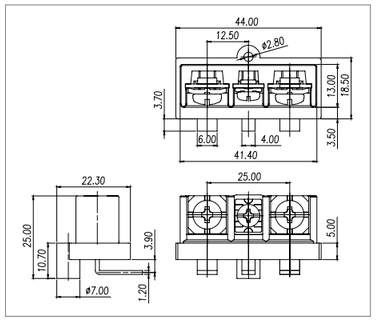



Pitch:12.5mm

MODEL: EM-51H

认证/CERTIFICATION	CQC
材质及电镀	
螺丝	M4.0, 钢 镀金
焊脚	铜合金, 镀金
塑件	PA66, UL94V-0
电气性能	
参考标准	UL / IEC
额定电压	300V / 450V
额定电流	30A / 32A
使用线径	22-10AWG / 4.0mm²
接触电阻	20mΩ
绝缘电阻	500MΩ/DC500V
耐电压	AC2000V/1Min
机械性能	
温度范围	-40℃~+105℃
扭矩	12.24kgf-cm/1.2Nm/10.6Lbin

MATERIAL	
Screw	M4.0 Steel Au plated
Pin Herder	Copper alloy, Au Plated
Housing	PA66, UL94V-0
ELECTRICAL	
Standard	UL / IEC
Rated voltage	300V / 450V
Rated current	30A / 32A
Wire range	22-10AWG / 4.0mm²
Contact resistance	20mΩ
Insulation resistance	500MΩ/DC500V
Withstanding voltage	AC2000V/1Min
MECHANICAL	
Temp. range	-40℃~+105℃
Torque	12.24kgf-cm/1.2Nm/10.6Lbin

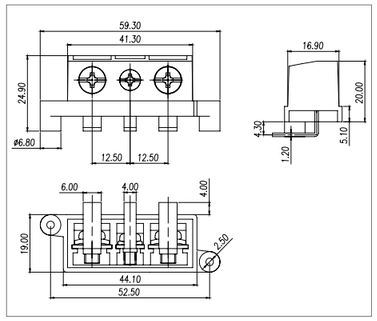



Pitch:12.5mm

MODEL: EM-52H

认证/CERTIFICATION	CQC
材质及电镀	
螺丝	M4.0, 钢 镀金
焊脚	铜合金, 镀金
塑件	PA66, UL94V-0
电气性能	
参考标准	UL / IEC
额定电压	300V / 450V
额定电流	30A / 32A
使用线径	22-10AWG / 4.0mm²
接触电阻	20mΩ
绝缘电阻	500MΩ/DC500V
耐电压	AC2000V/1Min
机械性能	
温度范围	-40℃~+105℃
扭矩	12.24kgf-cm/1.2Nm/10.6Lbin

MATERIAL	
Screw	M4.0 Steel Au plated
Pin Herder	Copper alloy, Au Plated
Housing	PA66, UL94V-0
ELECTRICAL	
Standard	UL / IEC
Rated voltage	300V / 450V
Rated current	30A / 32A
Wire range	22-10AWG / 4.0mm²
Contact resistance	20mΩ
Insulation resistance	500MΩ/DC500V
Withstanding voltage	AC2000V/1Min
MECHANICAL	
Temp. range	-40℃~+105℃
Torque	12.24kgf-cm/1.2Nm/10.6Lbin

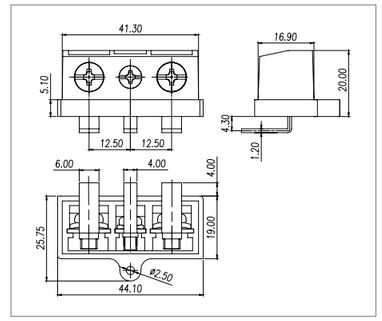



Pitch:11.0mm

MODEL: EM-21

认证/CERTIFICATION	
材质及电镀	
螺丝	M4.0, 钢 镀金
焊脚	铜合金, 镀金
塑件	PA66, UL94V-0
电气性能	
参考标准	UL / IEC
额定电压	300V / 450V
额定电流	30A / 32A
使用线径	22-10AWG / 4.0mm²
接触电阻	20mΩ
绝缘电阻	500MΩ/DC500V
耐电压	AC2000V/1Min
机械性能	
温度范围	-40℃~+105℃
扭矩	12.24kgf-cm/1.2Nm/10.6Lbin

MATERIAL	
Screw	M4.0 Steel Au plated
Pin Herder	Copper alloy, Au Plated
Housing	PA66, UL94V-0
ELECTRICAL	
Standard	UL / IEC
Rated voltage	300V / 450V
Rated current	30A / 32A
Wire range	22-10AWG / 4.0mm²
Contact resistance	20mΩ
Insulation resistance	500MΩ/DC500V
Withstanding voltage	AC2000V/1Min
MECHANICAL	
Temp. range	-40℃~+105℃
Torque	12.24kgf-cm/1.2Nm/10.6Lbin

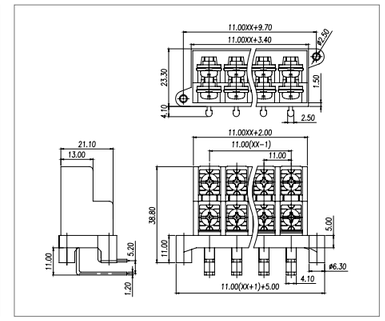



MODEL:FMDT-OTA-02P

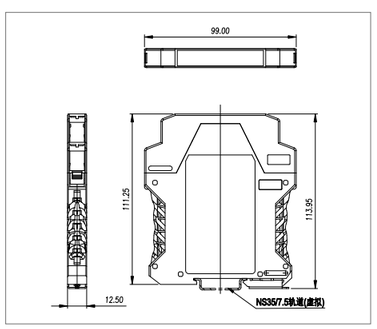



MODEL:FMDT-OTA-03P

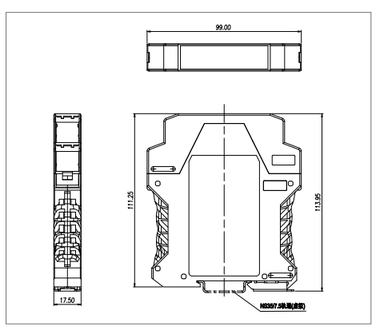



MODEL:FMDT-OTA-04P

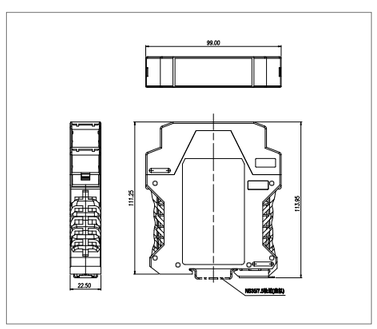

MODEL:FMDT-OTA-06P

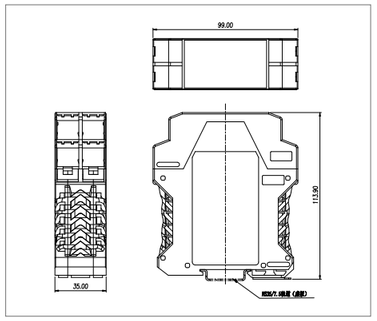

MODEL:FMDT-OTA-08P

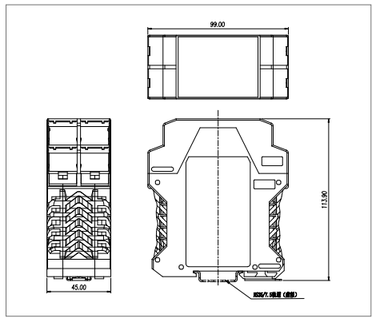

MODEL:FMDT-CTA-04P

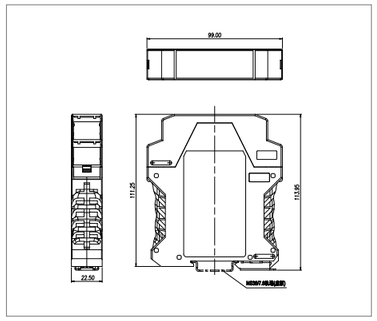



MODEL:FMDT-CTA-08P

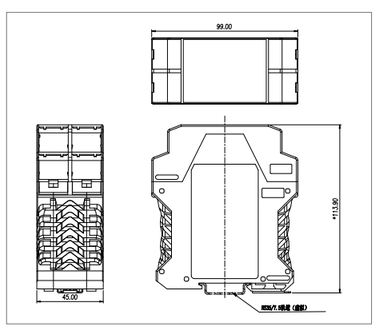

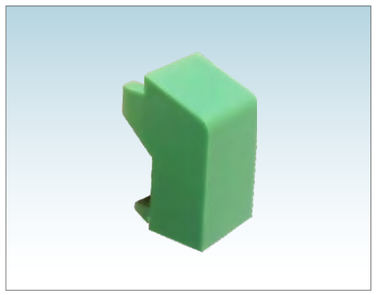

MODEL:FMDT-02P-FCG

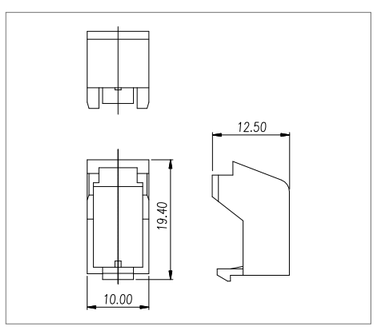

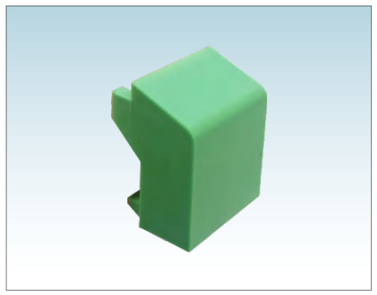

MODEL:FMDT-03P-FCG

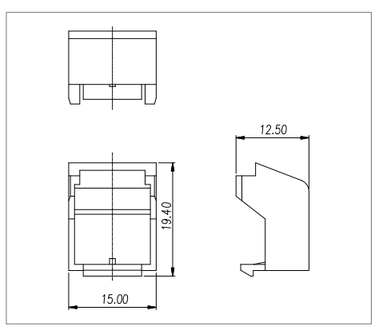

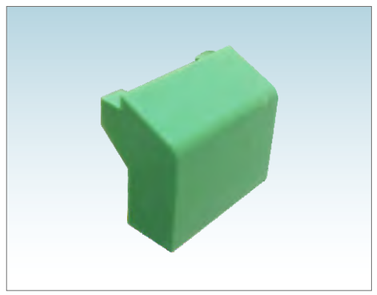

MODEL:FMDT-04P-FCG

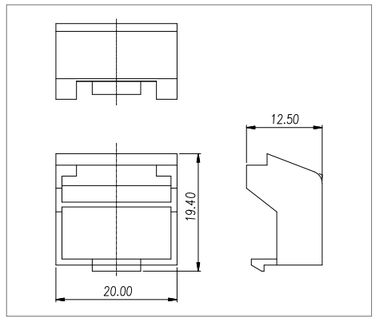

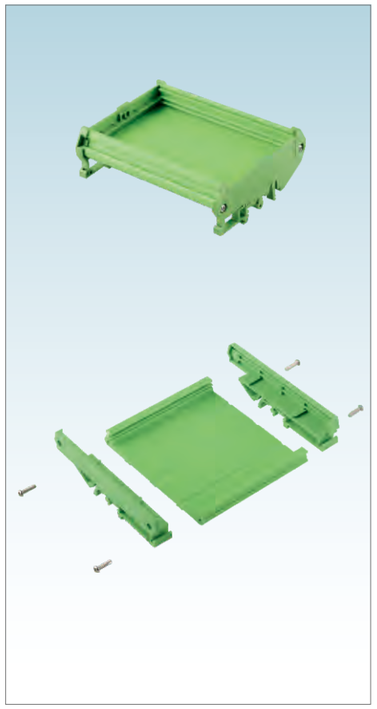



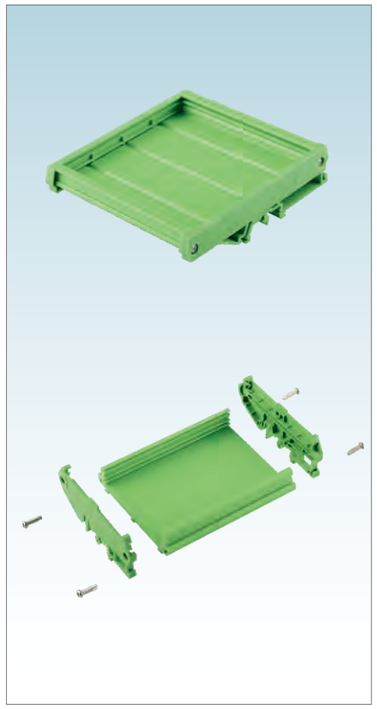

MODEL: SP6

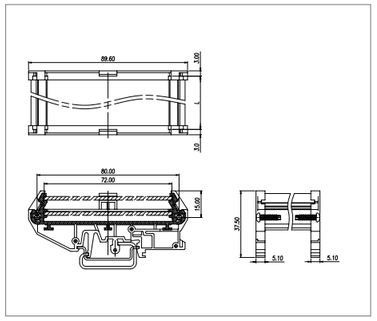

MODEL: SP7

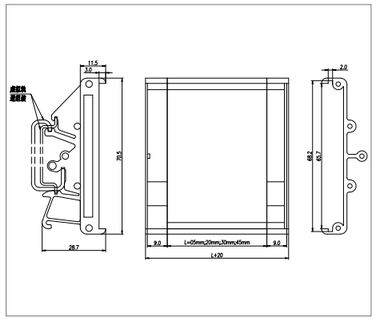

MODEL: SP8

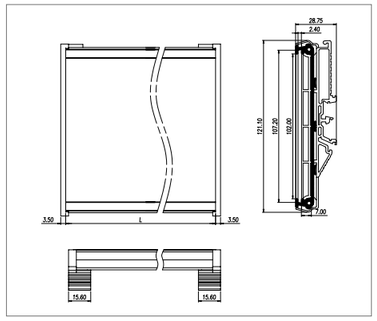

ISO14001 ISO45001 ISO9001 ISO80079-34 ISO/TS 22163

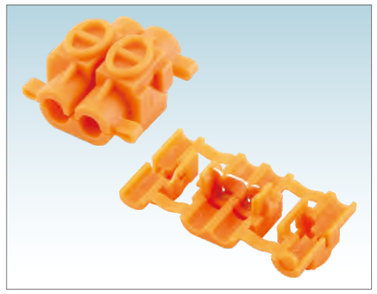

MODEL: WJET-04

认证/CERTIFICATION	

材质及电镀	
焊脚	铜合金，镀锡
塑件	PA66，UL94V-2
电气性能	
参考标准	IEC
额定电压	400V
额定电流	3A
使用线径	0.2-0.5 mm^2
接触电阻	20mΩ
绝缘电阻	500MΩ/DC500V
耐电压	AC2000V/1Min
机械性能	
温度范围	-40℃~+105℃

MATERIAL	
Pin Herder	Copper alloy, Sn Plated
Housing	PA66, UL94V-2
ELECTRICAL	
Standard	IEC
Rated voltage	400V
Rated current	3A
Wire range	0.2-0.5 mm^2
Contact resistance	20mΩ
Insulation resistance	500MΩ/DC500V
Withstanding voltage	AC2000V/1Min
MECHANICAL	
Temp. range	-40℃~+105℃

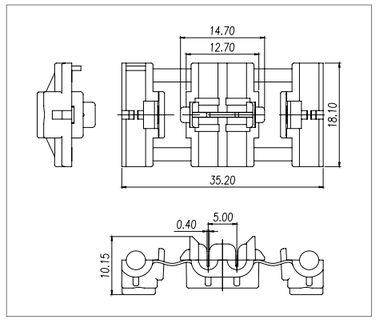

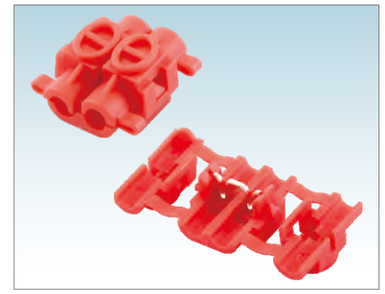

MODEL: WJET-10

认证/CERTIFICATION	

材质及电镀	
焊脚	铜合金，镀锡
塑件	PA66，UL94V-2
电气性能	
参考标准	IEC
额定电压	400V
额定电流	10A
使用线径	0.5-1.0 mm^2
接触电阻	20mΩ
绝缘电阻	500MΩ/DC500V
耐电压	AC2000V/1Min
机械性能	
温度范围	-40℃~+105℃

MATERIAL	
Pin Herder	Copper alloy, Sn Plated
Housing	PA66, UL94V-2
ELECTRICAL	
Standard	IEC
Rated voltage	400V
Rated current	10A
Wire range	0.5-1.0 mm^2
Contact resistance	20mΩ
Insulation resistance	500MΩ/DC500V
Withstanding voltage	AC2000V/1Min
MECHANICAL	
Temp. range	-40℃~+105℃

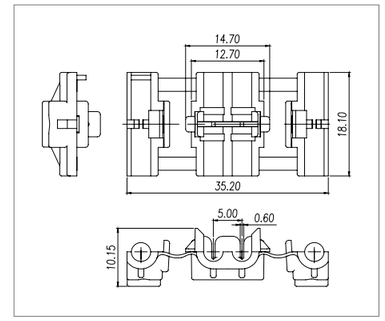

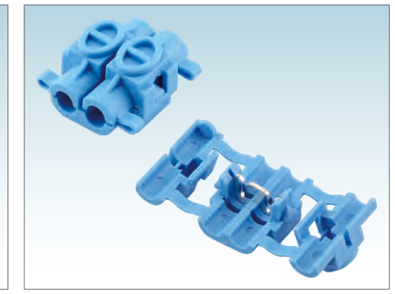

MODEL: WJET-25

认证/CERTIFICATION	

材质及电镀	
焊脚	铜合金，镀锡
塑件	PA66，UL94V-2
电气性能	
参考标准	IEC
额定电压	400V
额定电流	10A
使用线径	1.25-2.5 mm^2
接触电阻	20mΩ
绝缘电阻	500MΩ/DC500V
耐电压	AC2000V/1Min
机械性能	
温度范围	-40℃~+105℃

MATERIAL	
Pin Herder	Copper alloy, Sn Plated
Housing	PA66, UL94V-2
ELECTRICAL	
Standard	IEC
Rated voltage	400V
Rated current	10A
Wire range	1.25-2.5 mm^2
Contact resistance	20mΩ
Insulation resistance	500MΩ/DC500V
Withstanding voltage	AC2000V/1Min
MECHANICAL	
Temp. range	-40℃~+105℃

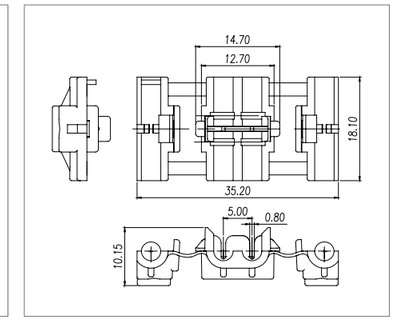



MODEL: WJK01

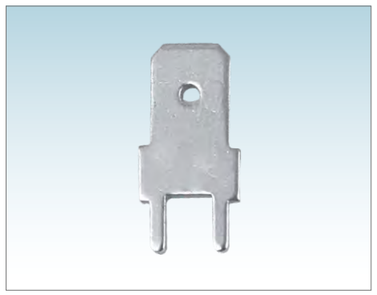

MODEL: WJK02

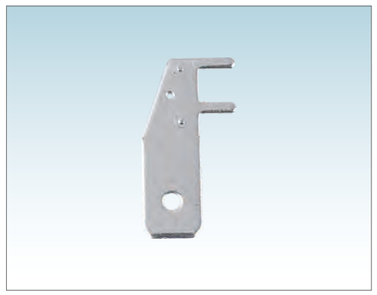

MODEL: WJK03

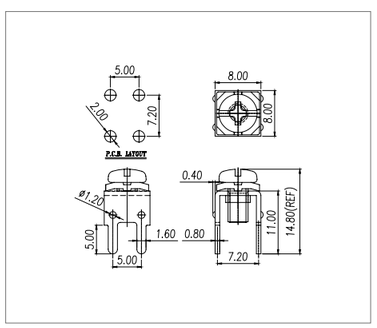

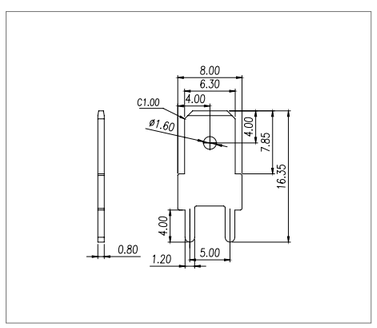

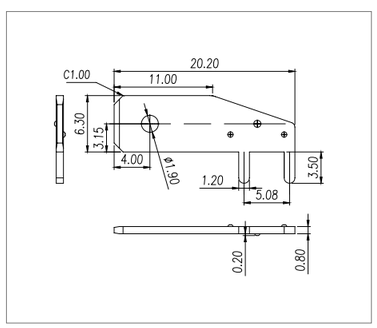

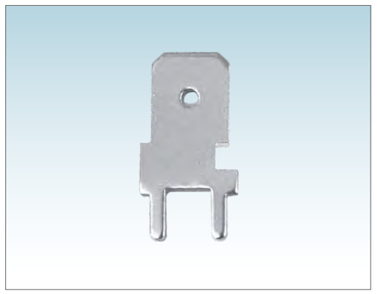

MODEL: WJK04

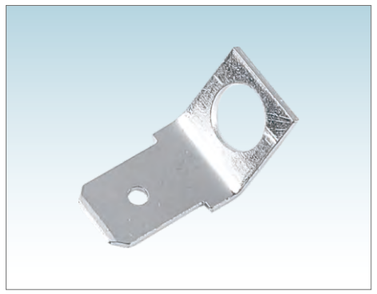

MODEL: WJK05

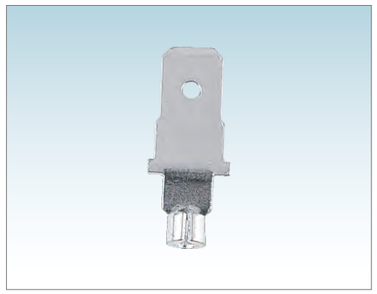

MODEL: WJK06

