WJ15EDG-PWI-2.5

PLUG-IN TERMINAL BLOCK

Download date：2025-06-16

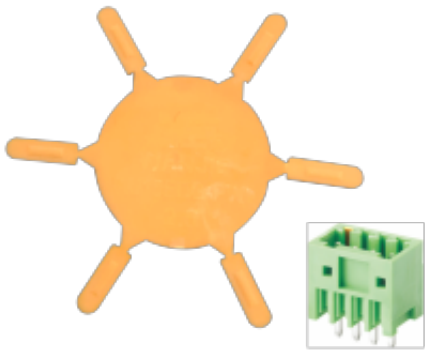

For reference only!version1.0
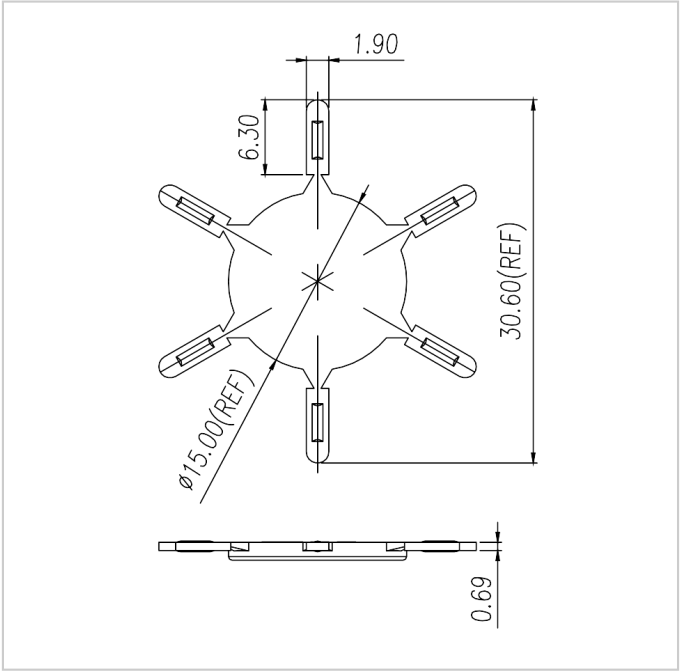
Dimensions