# WJ15EDGBM-3.5/3.81

PLUG-IN TERMINAL BLOCK

Download date : 2025-06-16

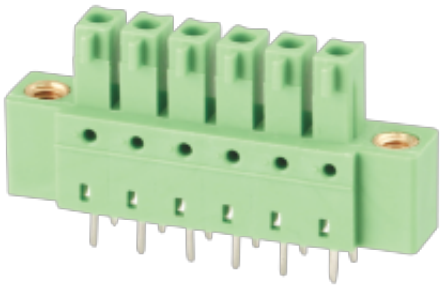

PCB connector

Rated current: 8 A

Rated voltage: 300 V

Pitch: 3.5 mm/3.81 mm

Mounting: Wave soldering

For reference only!version1.0

## UL/CUL

| | | | |
|---|---|---|---|
| Use Group | B | C | D |
| Rate Voltage [V] | 300 | - | 300 |
| Rated Current [A] | 8 | - | 8 |
| Wire Range [AWG] | | / | |
| Dielectric Voltage-Withstand | | 1.6KV | |

## IEC

| | | | |
|---|---|---|---|
| Overvoltage Category | III | III | II |
| Contamination Class | 3 | 2 | 2 |
| Rated Voltage [V] | 160 | 160 | 320 |
| Rated Current [A] | 8 | 8 | 8 |
| Impulse withstand voltage [KV] | 2.5 | 2.5 | 2.5 |
| Conductor cross section[solid/flexible] [mm²] | | / | |

## Material

| | |
|---|---|
| Insulation Material | PA66 |

| | |
|---|---|
| Flame relardant rating | UL94V-0 |
| Conductor Material | Copper alloy |
| Plating of conductor surface | Sn plated |

## Other Data

| | |
|---|---|
| Pitch/Poles [mm]/[P] | 3.5 , 3.81/2-24 |
| Stripping Length [mm] | / |
| Screw/Torque(Max)[N.m] | / |
| Operating temperature [℃] | -40~+105 |
| Soldering temperature | 260℃/5S |
| Pin dimensions [mm] | 0.6*1.0 |
| PCB Hole Diameter [mm] | Ø1.4 |

## Dimensions

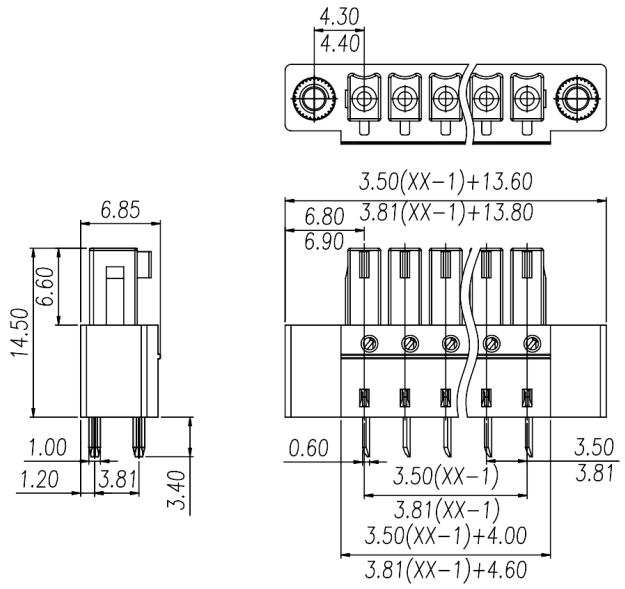


## PCB opening diagram

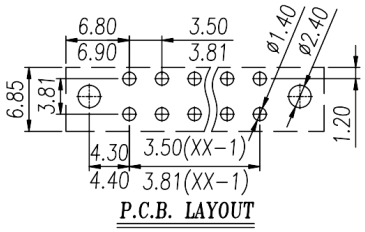


## Accessories

WJ15EDGKRM-3.81