

额定电流: 15A

额定电压: 300V

间距:5.08mm

目录仅供参考，实际规格依产品工程图为准 版本1.0

技术数据-UL/CUL

等级 Use Group	B	C	D
额定电压 Rate Voltage [V]	300	-	300
额定电流 Rated Current [A]	15	-	10
接线范围 Wire Range [AWG]		-	
耐电压 Dielectric Voltage-Withstand		1.6KV	

技术参数-IEC

过电压类别 Overvoltage Category	Ⅲ	Ⅲ	Ⅱ
污染等级 Contamination Class	3	2	2
额定电压 Rated Voltage [V]	250	320	400
额定电流 Rated Current [A]	10	10	10
额定冲击电压 Impulse withstand voltage [KV]	4	4	4

导线截面积[硬/柔] Conductor cross section [mm²]	-

材料 Material

绝缘材料 Insulation Material	PA66
阻燃等级 Flame relardant rating	UL94V-0
导体材料 Conductor Material	Copper alloy
导体表面镀层 Plating of conductor surface	Sn plated

一般参数 Other Date

间距/极数 Pitch/Poles [mm]/[P]	5.08/2-24
剥线长度 Stripping Length [mm]	-
螺丝/扭矩 Screw/Torque(Max)[N.m]	-
工作温度 Operating temperature [℃]	-40～+105
焊接方式 Soldering method	Wave soldering
引针尺寸 Pin dimensions [mm]	1.0*1.0
PCB板孔径 PCB Hole Diameter [mm]	Ø1.7

尺寸图

PCB开孔图

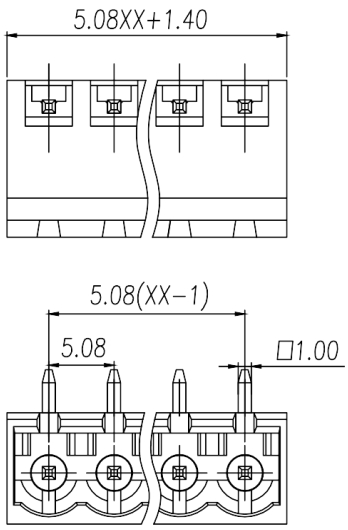

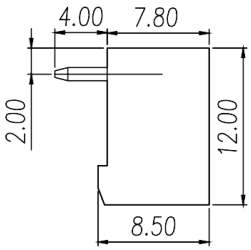

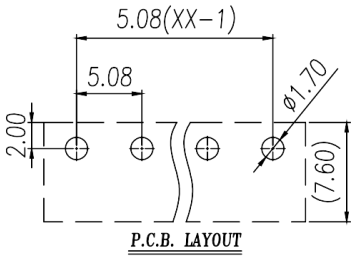

适配产品



WJ2EDGK-5.08



WJ2EDGKH-5.08



WJ2EDGKA-5.08



WJ2EDGKB-5.08



WJ2EDGKAH-5.08



WJ2EDGKC-5.08





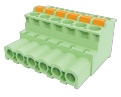

WJ2EDGKD-5.08



WJ2EDGKDA-5.08



WJ2EDGKDB-5.08



WJ2EDGKDH-5.08

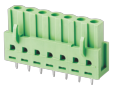

WJ2EDGKZ-5.08



WJ2EDGKL-5.08

WJ2EDGB-5.08

WJ2EDGA-5.08