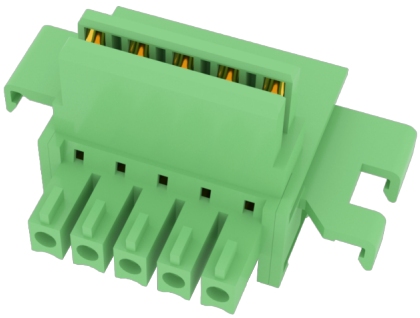

额定电流: 8A

额定电压: 150V

间距:3.81mm

目录仅供参考，实际规格依产品工程图为准 版本1.0

## 技术数据-UL/CUL

| | | | |
|---|---|---|---|
| 等级 Use Group | B | C | D |
| 额定电压 Rate Voltage [V] | 150 | - | 150 |
| 额定电流 Rated Current [A] | 8 | - | 8 |
| 接线范围 Wire Range [AWG] | | - | |
| 耐电压 Dielectric Voltage-Withstand | | 1.3KV | |

## 技术参数-IEC

| | | | |
|---|---|---|---|
| 过电压类别 Overvoltage Category | Ⅲ | Ⅲ | Ⅱ |
| 污染等级 Contamination Class | 3 | 2 | 2 |
| 额定电压 Rated Voltage [V] | 125 | 125 | 320 |
| 额定电流 Rated Current [A] | 8 | 8 | 8 |
| 额定冲击电压 Impulse withstand voltage [KV] | 2.5 | 2.5 | 2.5 |

| | |
|---|---|
| 导线截面积[硬/柔] Conductor cross section [mm²] | - |

## 材料 Material

| | |
|---|---|
| 绝缘材料 Insulation Material | PA66 |
| 阻燃等级 Flame relardant rating | UL94V-0 |
| 导体材料 Conductor Material | Copper alloy |
| 导体表面镀层 Plating of conductor surface | Au plated |

## 一般参数 Other Date

| | |
|---|---|
| 间距/极数 Pitch/Poles [mm]/[P] | 3.81/5 |
| 剥线长度 Stripping Length [mm] | - |
| 螺丝/扭矩 Screw/Torque(Max)[N.m] | - |
| 工作温度 Operating temperature [℃] | -40～+105 |
| 焊锡温度 Soldering temperature | - |
| 引针尺寸 Pin dimensions [mm] | - |
| PCB板孔径 PCB Hole Diameter [mm] | - |

## 尺寸图

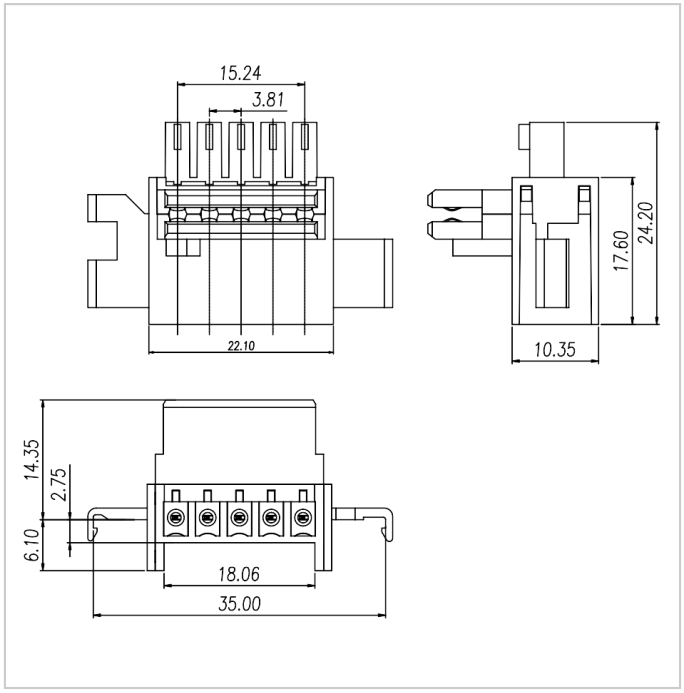


## 适配产品



FMDH-03P