

M12 公头面板式，焊接式，前锁安装

目录仅供参考，实际规格依产品工程图为准 版本1.0

连接器系列 Connector Series: M12

类型 Gender	Male 公
编码 Coding	A,B,C,D
装配方式 Locking Type	Fix Screw 锁螺丝
安装类型 Mounting Type	Front Fastened 前锁
产品编码 Part No	M12-X**-ST0-M02-BQ*

技术参数 Technical Data

标准 Standard	IEC61076-2-101
工作温度 Ambient Temperatur	-40℃~+105℃
绝缘电阻 Insulation Resistance	≥100MΩ
接触电阻 Contact Resistance	≤5mΩ
防护等级 IP Class	IP67

机械寿命 Mating Endurance	>100 Mating Cycles

材质说明 Material Data

胶芯材料 Connector Carriers	PA
接触端子 Connector Contacts	Copper Alloy With Gold Plated 铜镀金
螺母/螺丝 Connector Nut/Screw	Copper Alloy With Nickel Plated 铜镀镍
屏蔽 Shielding	Unshielded 非屏蔽
密封胶圈 Seal/O-Ring	FKM 氟橡胶
连接方式 Contacts Termination	Solder Type 焊接式

电气参数&机械参数 Electrical Data & Mechanical Date

Pin数 Contacts Pin [Pins]	3	4	5	6	8	12	17
额定电流 Rated Current [A]	4	4	4/2	2	2	1.5	1.5
电压 Voltage AC/DC [V]	250/250	250/250	60/60	30/30	30/30	30/30	30/30
接线范围 Wire Range AWG/mm²	22/0.34	22/0.34	22,24/0.34,0.25 (C-code)	24/0.25	24/0.25	26/0.14	26/0.14

尺寸图

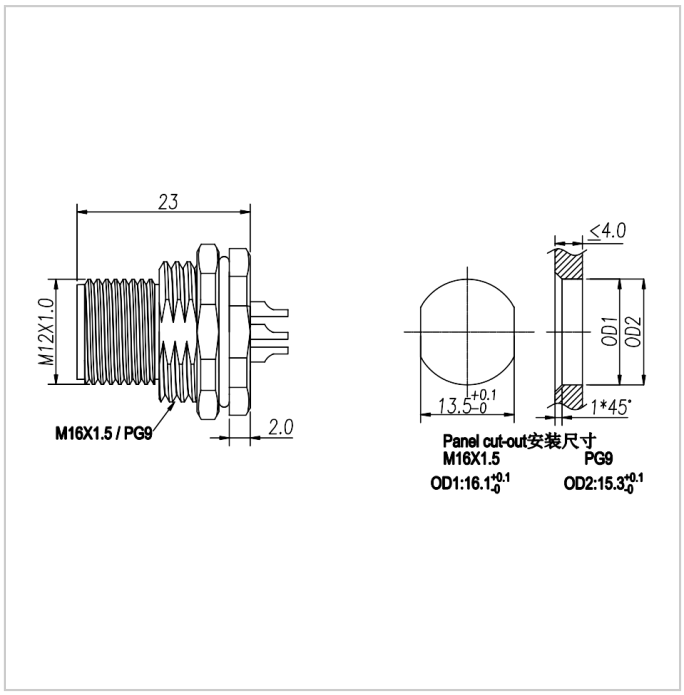

适配产品



M12-X**-ST0-F02-BC*-XXX



M12-X**-RA0-F02-BC*-XXX



M12-X**-ST2-F02-BC*-XXX



M12-X**-RA2-F02-BC*-XXX



M12-X**-ST0-F02-BC*-XXX



M12-X**-ST0-F02-BC*-XXX







M12-X**-ST0-F02-BV*-XXX



M12-X**-ST0-F02-BFM



M12-X**-ST2-M02-BF*



M12-X**-ST0-F02-BMT



M12-X**-ST0-F02-SC*-XXX



M12-X**-RA0-F02-SC*-XXX



M12-X**-ST2-F02-SC*-XXX



M12-X**-ST0-F02-SV*-XXX



M12-X**-ST0-F04-PS*



M12-X**-RA0-F04-PS*

M12-X**-ST2-F04-BS*

M12-X**-RA2-F04-BS*