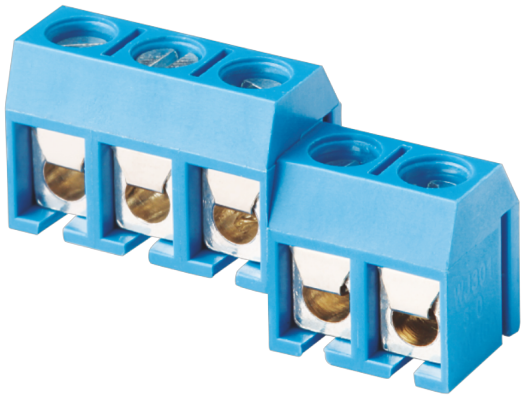

固定式连接器

额定电流: 16A

额定电压: 250V

使用线径: 22-14AWG

间距:5.0mm

安装: 波峰焊

目录仅供参考，实际规格依产品工程图为准 版本1.0

## 技术数据-UL/CUL

| | | | |
|---|---|---|---|
| 等级 Use Group | B | C | D |
| 额定电压 Rate Voltage [V] | 250 | - | 250 |
| 额定电流 Rated Current [A] | 16 | - | 10 |
| 接线范围 Wire Range [AWG] | 22～14 | | |
| 耐电压 Dielectric Voltage-Withstand | 1.5KV | | |

## 技术参数-IEC

| | | | |
|---|---|---|---|
| 过电压类别 Overvoltage Category | Ⅲ | Ⅲ | Ⅱ |
| 污染等级 Contamination Class | 3 | 2 | 2 |
| 额定电压 Rated Voltage [V] | 250 | 400 | 630 |
| 额定电流 Rated Current [A] | 17.5 | 17.5 | 17.5 |
| 额定冲击电压 Impulse withstand voltage [KV] | 4 | 4 | 4 |

| | |
|---|---|
| 导线截面积[硬/柔] Conductor cross section [mm²] | 0.5~1.5 |

## 材料 Material

| | |
|---|---|
| 绝缘材料 Insulation Material | PA66 |
| 阻燃等级 Flame relardant rating | UL94V-0 |
| 导体材料 Conductor Material | Copper alloy |
| 导体表面镀层 Plating of conductor surface | Sn plated |

## 一般参数 Other Date

| | |
|---|---|
| 间距/极数 Pitch/Poles [mm]/[P] | 5.0/2～24 |
| 剥线长度 Stripping Length [mm] | 5～6 |
| 螺丝/扭矩 Screw/Torque(Max)[N.m] | M2.5/0.4 |
| 工作温度 Operating temperature [℃] | -40～+105 |
| 焊接方式 Soldering method | Wave soldering |
| 引针尺寸 Pin dimensions [mm] | Ø1.0 |
| PCB板孔径 PCB Hole Diameter [mm] | Ø1.2 |

## 尺寸图

## PCB开孔图

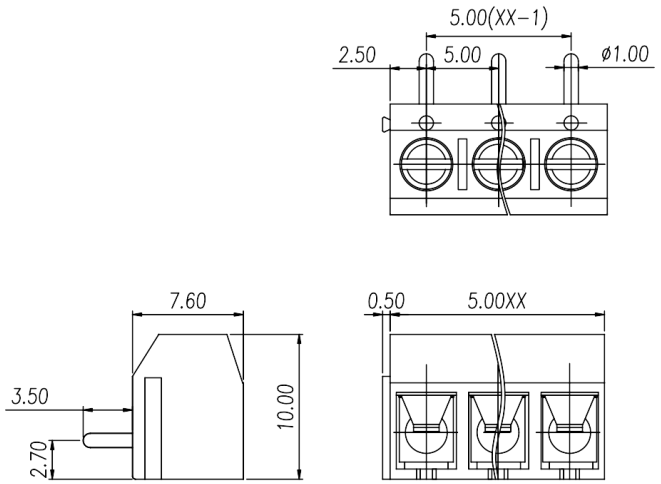
5.00(XX-1)
2.50
5.00
ø1.00
7.60
0.50
5.00XX
3.50
10.00
2.70

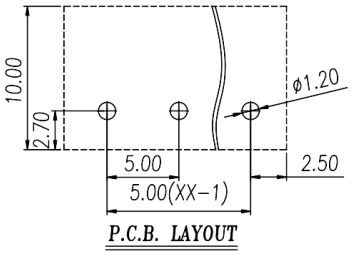
10.00
2.70
ø1.20
5.00
2.50
5.00(XX-1)
P.C.B. LAYOUT